Report of

Millimeter Wave Working Group

AAC 2004

Richard Temkin

Glenn Scheitrum

Co-Leaders

Outline

- Overview
- State-of-the-Art
  - Sources
  - Components
- Summary
  - Recommendations

Overview

- **THEME:**
  - **Identify the most promising concepts for achieving High Power Output at Millimeter Wavelengths for driving future accelerators.**

- **PLAN:**
  - Evaluate the state-of-the-art in millimeter wave sources.
  - Evaluate the state-of-the-art in auxiliary components at millimeter wavelengths.
  - Explore promising concepts for MMW sources in the 100 MW range in the 30 to 100 GHz range.
  - Evaluate the auxiliary components and technologies needed to implement the high power millimeter wave sources, such as power dividers, delay lines, etc.

34 GHz Magnicon

- INITIAL OPERATION OF 34 GHZ, 45 MW PULSED MAGNICON, O.A. Nezhevenko et al., Omega-P, Inc.
- After RF conditioning of only $2x10^5$ pulses, the magnicon produced an output power of ~10 MW in 0.25 μsec pulses, with a gain of 54 dB.
- Single frequency amplifier suitable for accelerator driver demonstrated.
- Full operation expected after further conditioning.

Initial Test Results (only $2x10^5$ pulses)	
Power, MW	10.5
Pulse duration, μsec	0.25
Repetition rate, Hz	~1
Gain, dB	54
Beam voltage, kV	430
Beam current, A	185

MMW Sources: State-of-the-Art (2a): 17 GHz GK

Ultimate Design Goals

Power (MW)	80 (18.5 MW so far)
Pulse Length	1 μs
Efficiency	32%
Gain (4 cavities)	49 dB
Voltage (kV)	460
Current (A)	540
Velocity Ratio, α	1.4

17 GHz Gyroklystron (GK) at University of Maryland

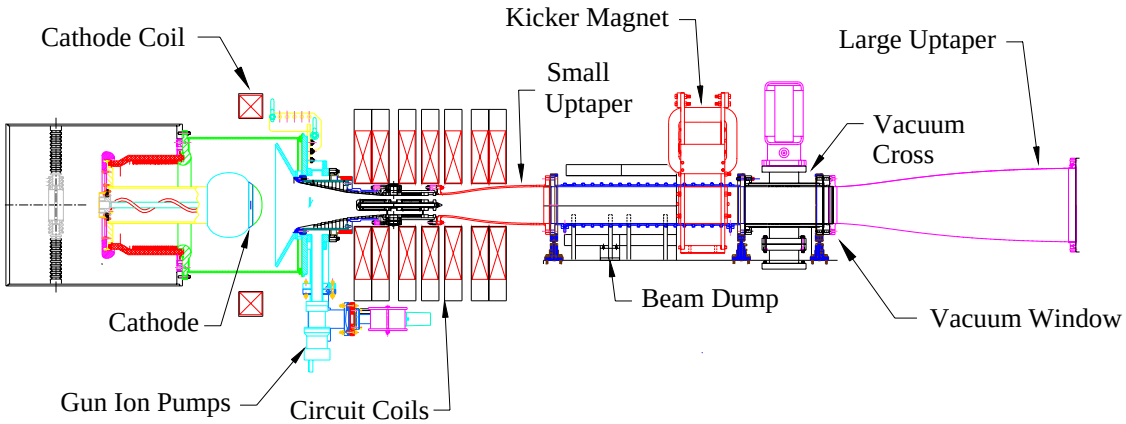

MMW Sources: State-of-the-Art (2b): 91 GHz GK

- 91 GHz Gyroklystron amplifier built by Calabazas Creek Research.
  - Power level of 10 MW
  - Electronic efficiency > 40%
  - Gain of 55 dB
  - Frequency doubling option chosen

  - Status: Completely built, waiting for testing at Univ. MD.

MMW Sources: State-of-the-Art (3): Klystron

- A **71dB Gain High Efficiency Relativistic Klystron** using a High Current Linear Accelerator Traveling Wave Buncher Output Circuit
  - 17.14 GHz
  - 6 cavities
  - Tested at pulse width of 150 ns
- High gain allows solid state driver.

Collector	89.9	A
Gun Volts	545	kV
P. RF Out	25.5	MW
Efficiency	51.9	%
P. Drive	1.8	W
Gain	71.5	dB

Haimson Research Corp., tested at MIT

Multiple Beam Klystron (MBK)

- Increased power capability at lower beam voltage.
- Saves cost and space.
- Higher efficiency.
- Multiple cathodes
- Multiple beam tunnels
- May have multiple circuit stacks
- Attractive for MMW applications.

1.3 GHz MBK for Tesla built by CPI

Millimeter Waves Sources (5): MBK with PBG Cavities

- **Multiple Beam Klystron (MBK) with Photonic Bandgap cavities.**
  - **Proposed by Duly Research**
- **MBK preliminary design.**
  - **Six-beam X-Band MBK**
    - **~150 MW, ~60 % efficiency in a very compact construction.**
  - **Photonic Band Gap structure with small number of rods – "rod loaded."**
  - **Smaller transverse dimensions than comparable annular MBK with conventional multiple cavity structure.**
  - **Shorter interaction length and higher gain.**
  - **Scalable to Millimeter Wave regime.**

Sheet Beam Klystron (SBK)

- Electron Beam is a sheet beam, reducing space charge.
- Currently under development by Calabazas Creek Res. and SLAC.
- Enabled by 3D design codes.

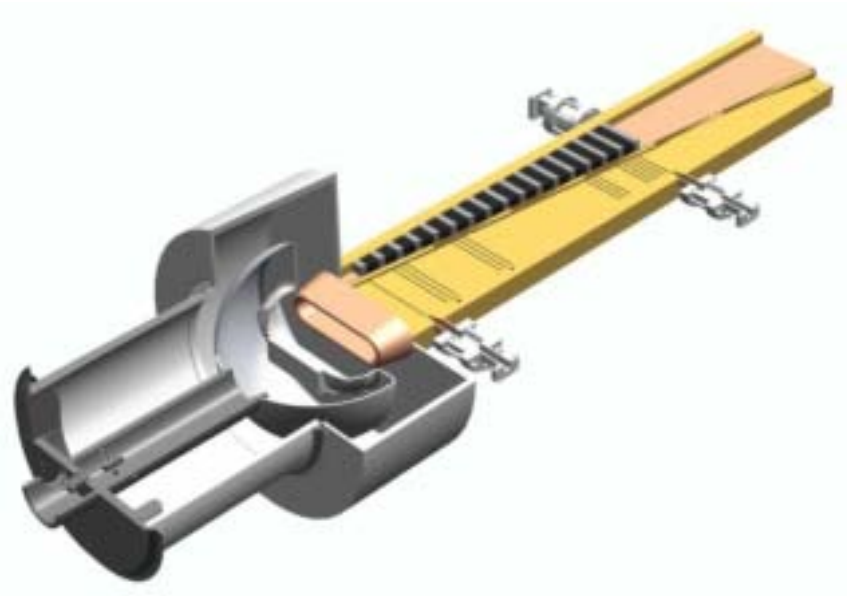

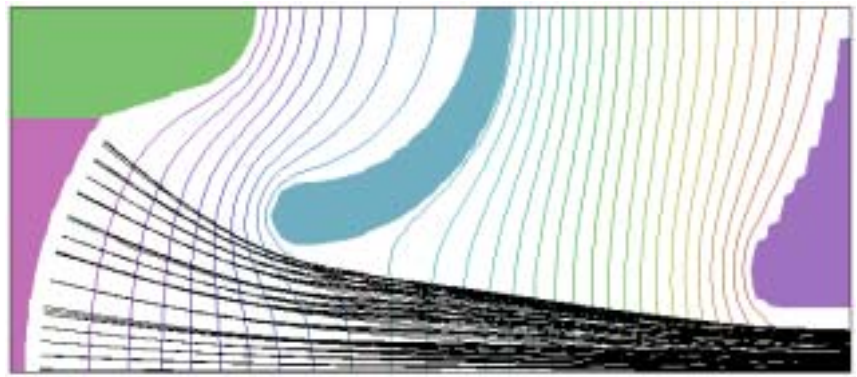

- Electron trajectories in gridded gun.

Conceptual design by SLAC.

Millimeter Waves Sources (7): Lasertron

- Lasertron idea conceived at Los Alamos, 1982
- Experimental tests at SLAC and KEK, 1986
- Work at NIU/FNAL and DULY Research, Inc. resulted in the submission of a Phase I SBIR in 2003 on the Planar Lasertron

- Proposed planar (sheet beam) **Lasertron** for 160 MW at 11.4 GHz

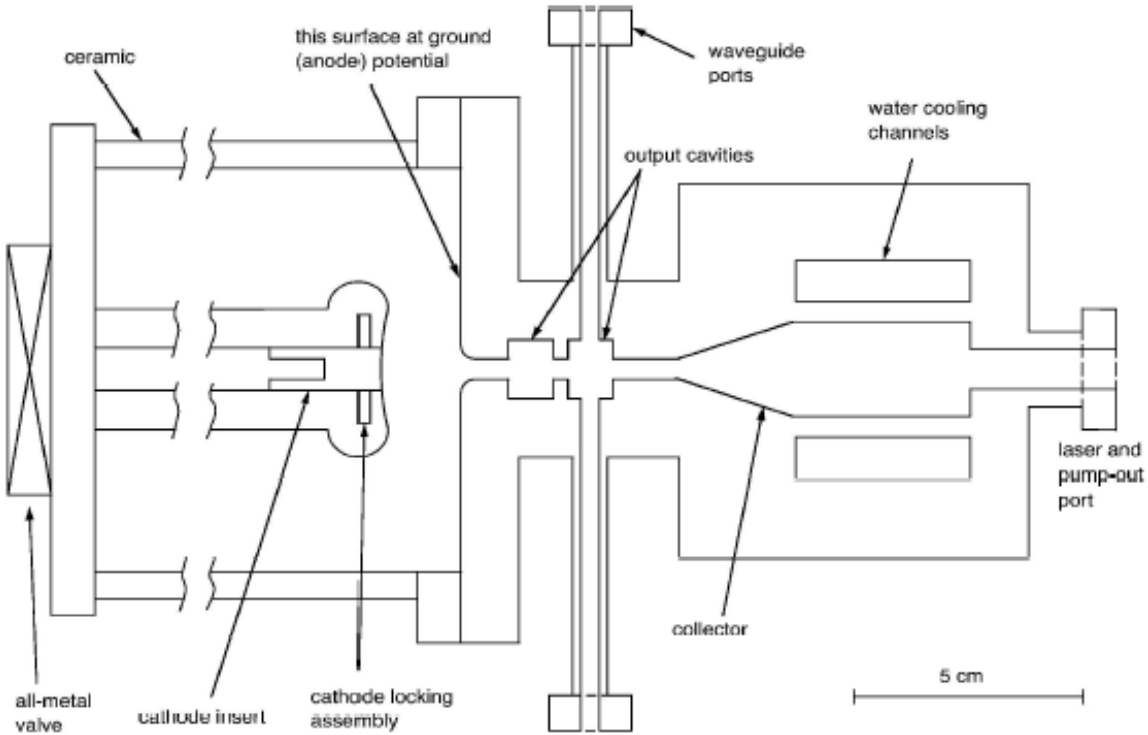

Millimeter Wave Components (1)

- **Plasma switch** has been developed by Omega-P and IAP, Russia, for testing with X-band active SLED-II system for production of flat-top compressed pulses and for increasing the efficiency of SLED-II system.

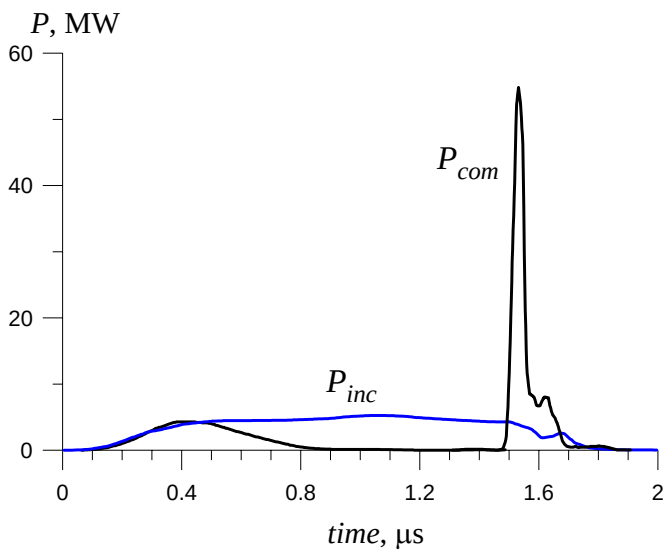

Output pulse of 11.4 GHz active SLED with plasma switch

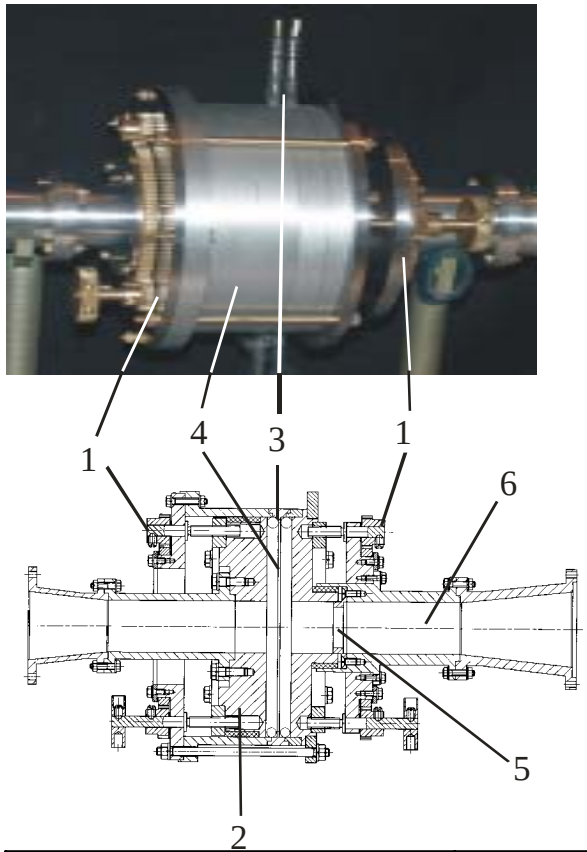

Power Gain	**10**
Output Power	**53 MW**
Pulse Duration	**60 ns**

Millimeter Wave Components (2)

- A **whispering gallery pulse compressor** has been developed by Omega-P and IAP, Russia.
- It is capable of operating at high rf powers.
- SLED-like performance has been demonstrated in low-power X-band tests.
- A twin-cavity version has been designed to compress chirped pulses.

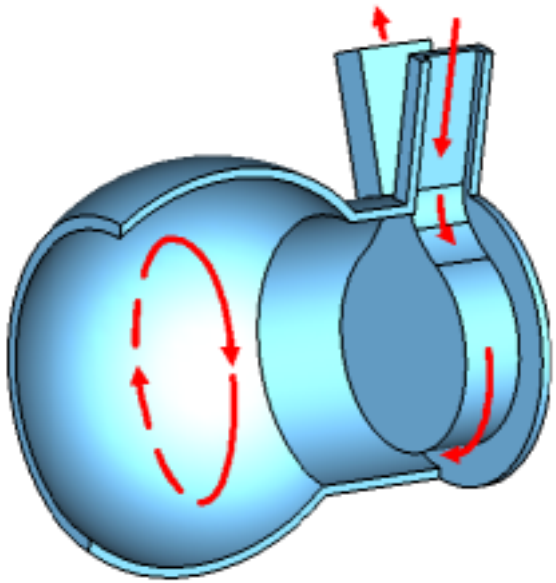

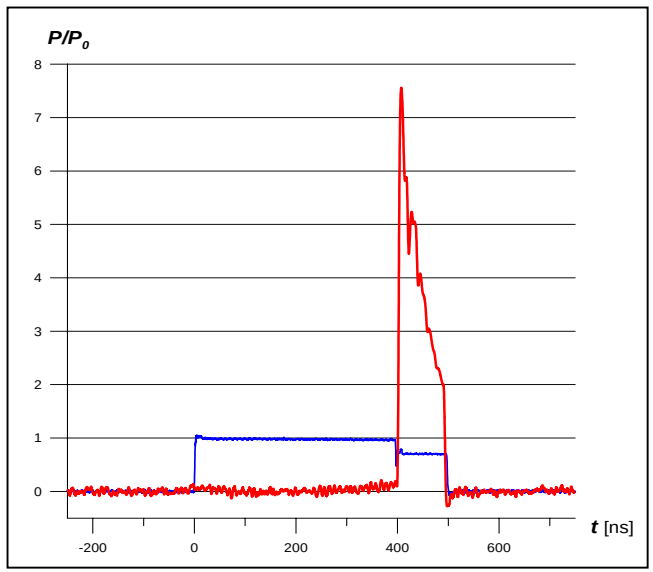

Millimeter Wave Components (3)

- A **ferroelectric phase shifter** has been developed by Omega-P as a key element of a high-power switch for an active DLDS for a future linear collider.
- First testing of the phase shifter up to 50 MW will be conducted using the Omega-P/NRL 11.4 GHz magnicon.
- Ferroelectric phase shifters and switches operate using electrically controlled permittivity and will allow a substantial increase in the efficiency and compression ratio of rf power compression and combining systems.

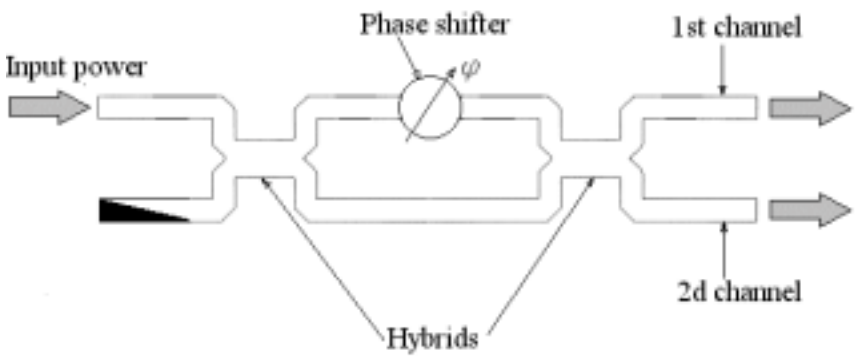

A possible arrangement of a switch for an active DLDS.

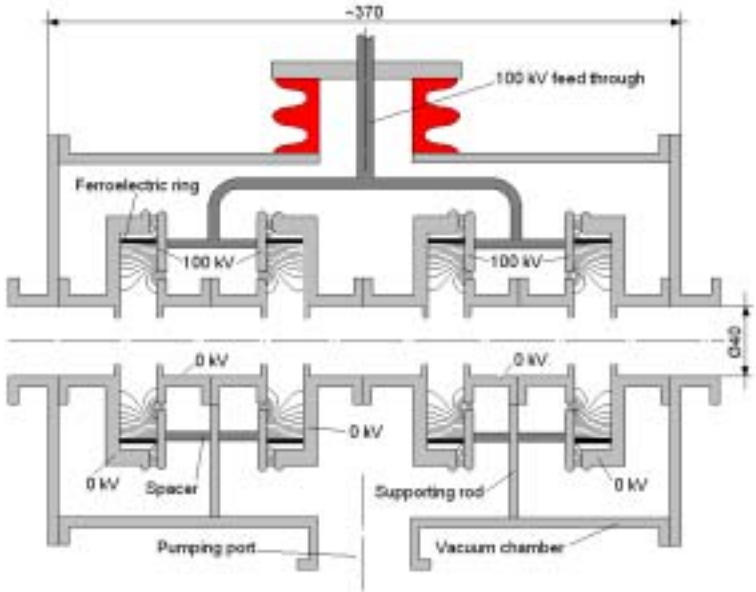

Phase Shifter Design

Transmission Line Components

- **High-power components** providing pulse compression, transmission and input coupling to MMW accelerating structures are needed.

- High efficiency results obtained at Omega-P and IAP, Russia for mode converters, output windows, miter bends, and pumping ports for the 34 GHz magnicon at Yale Beam Physics Lab.

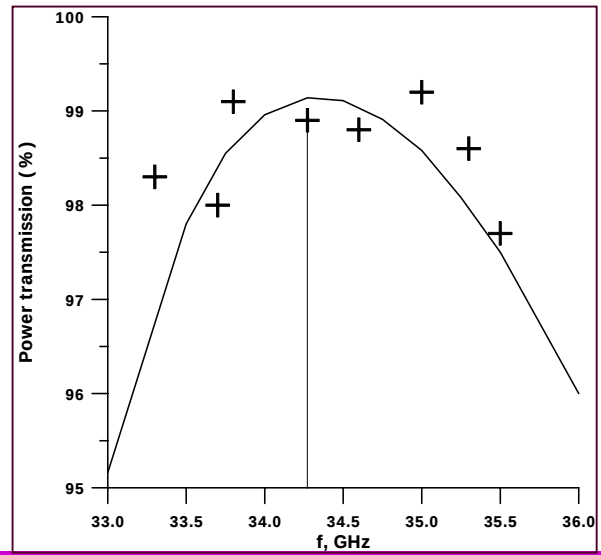

Summary

- Millimeter Wave Sources have made excellent progress.
  - 34 GHz Magnicon demonstrated at 10 MW, capable of 45 MW after conditioning.
  - 10 MW, 91 GHz gyroklystron built, ready to test.
    - Based on successful 17 GHz gyroklystron.
  - Progress on high gain klystron, 71 dB gain at 17 GHz.
- Many new ideas in this field (MBK, SBK, etc.)
- Millimeter Wave Components also making excellent progress (phase shifters, active pulse compressors, oversized MMW components).

Recommendations

- **MMW technology is the <u>only practical technology</u> to increase the gradient of a <u>high luminosity</u> linear collider in the near future (next thirty years).**
- **MMW accelerator testing should be done ASAP to demonstrate a gradient of >150 MeV/m.**
  - Requires development of high power source(s).
  - Requires development of pulse compressor, transmission line and structure.
  - Test facility or facilities needed.
- **This important goal should be strongly endorsed and supported by the accelerator community.**