Alex Murokh

Frequently Asked Questions about VISA Alignment Laser

During the last few VISA video-conferences the alignment laser was a popular issue. As a primary care-taker of the alignment laser system I wrote this technote, with the dual purpose: (a) explain the present configuration, and on-going improvement efforts; and (b) organize my own thoughts on the subject.

Present Configuration

The alignment laser system, as of today, consists of 2 diode lasers (630 and 800 nm), optimized to produce a minimum spot-size inside the 4 m undulator.

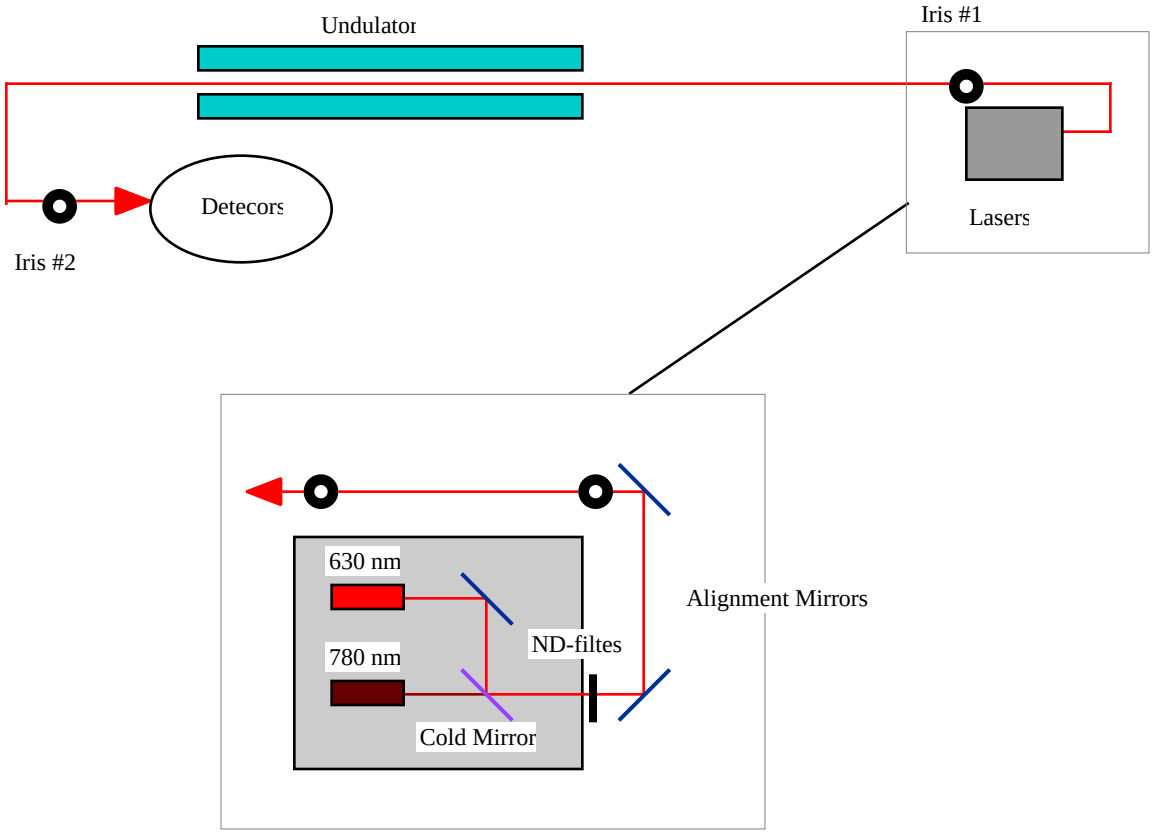

Initially, we started working on the alignment laser to satisfy very simple requirements, discussed at the VISA meeting at BNL (December 98):

- it has to be stable;
- it has to be close to FEL wavelength (800 nm), so it can be used to test the transport optics;

• it has to produce small enough spot-size, to be used within the undulator gap (6 mm wide, 4 m long).

As a result, Jamie bought a 780 nm diode laser from Melles Griot; and with the use of standard Melles Griot 4 mm focusing optics, we were able to satisfy for the demands above.

Later on, Robert found out, that it is very hard to propagate the invisible laser through the undulator gap. Also, it was realized, that invisible light is not helping to align the BPM optics.

To remove these obstacles, we modified the system: the 630 nm diode laser was purchased, and the whole system was placed on the removable plate. Now we can remove the plate from the table, align the two lasers with respect to each other by virtue of cold mirror, and put the plate back on the alignment table. 630 nm laser can be easily propagated through the undulator, and optically aligned, and IR laser gets aligned automatically. Also red laser is used to pre-align BPM optics.

After the latest alignment and runs, additional issues have been raised:

1. During the alignment we found out, that with the present mirror mounts, we can not control the laser with sufficient precision. In addition, the mirrors set to control the laser do not allow a mutually independent variation of beam angle and position, which is desirable.
2. We don't have an accurate way to monitor the beam position, after the alignment is done.
3. The 790 nm laser has higher modes present; and the red laser spot-size is twice larger than the theoretical limit.
4. Inserting the ND filters significantly changes the position of laser centeroid.

1. Controlling the laser beam

Presently we use 2" mirrors on regular kinematic mounts to control the beam position and angle. The minimum step for each mirror is ~ 20 µrad, which corresponds to 150 - 200 µm at the end of the undulator. There are two improvements to be made:

1. Finer steps can be achieved, by using home-made mirror mounts (Robert Ruland is working on that), or by using motorized piezo-driven mirror mounts ($1,500 each). Either way it will be implemented during the next alignment in May.
2. Optical flat on the rotatable mount will be added between the mirrors to control the position of the beam independently.

2. Monitoring the beam position

We monitor the position of the alignment lasers, by comparing the beam position with two irises 10 meters apart. Visual inspection allows an accuracy better than 300 µm. Installing CCD cameras would allow to improve these limit; yet the issue is still open. Proper monitoring, through the use of beamsplitter and the reference line doesn't seem to be feasible in the near future, primarily due to the space constrains in the experimental hall.

3. Laser beam properties and stability

(a) *780 nm laser*

Theoretical spot-size limit for the Gaussian beam (considering the waste in the middle of the undulator) is

$$w = w_0\sqrt{1+\left(\frac{\lambda z}{\pi w_0^2}\right)^2} \qquad w_{\min} = \sqrt{\frac{2z\lambda}{\pi}} \qquad z \approx 2\ \mathrm{m}$$

For 780 nm laser the bottom limit is w = 1.00 mm. So far, the achieved beam spot-size at the undulator edges is ~ **1.2 mm** (and as small as **0.75 mm** in the middle of the undulator), which is fairly close to the desired performance (picture below is taken at intra-undulator BPM # 5):

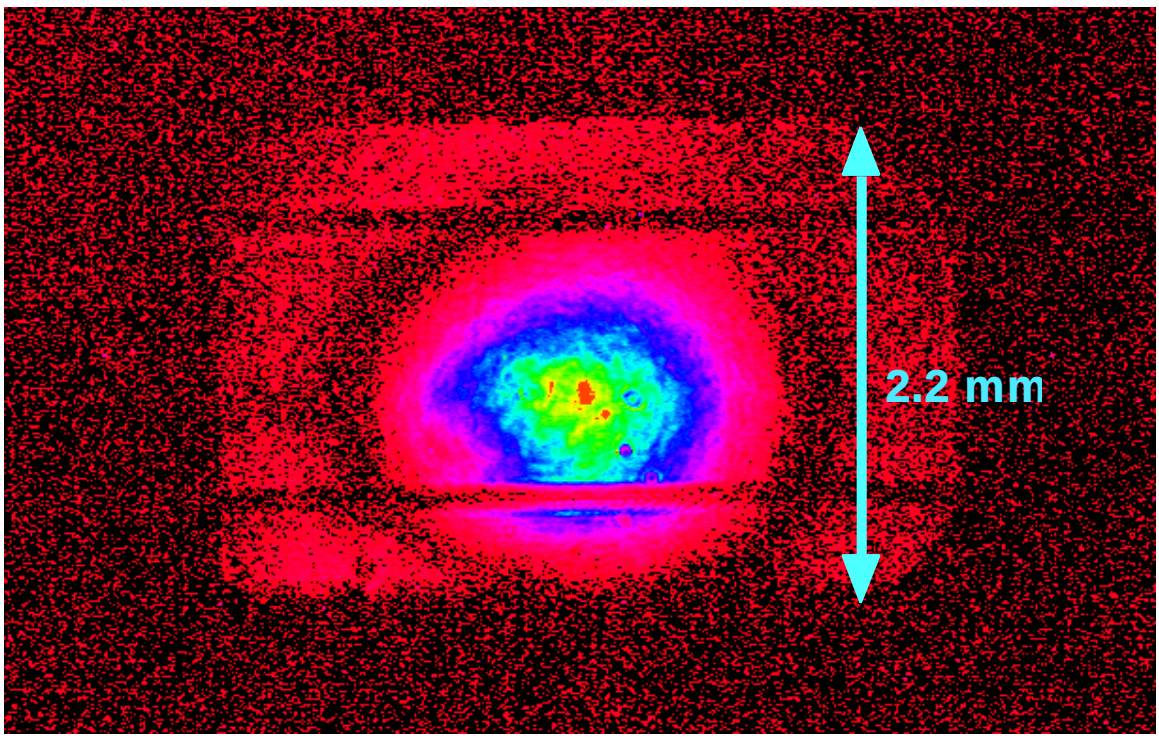

Since the beam has a structure (higher modes), there is some ambiguity on how to use it for the alignment: we can peak a hot spot or a centeroid position. The test was done on the measurements consistency and repeatability:

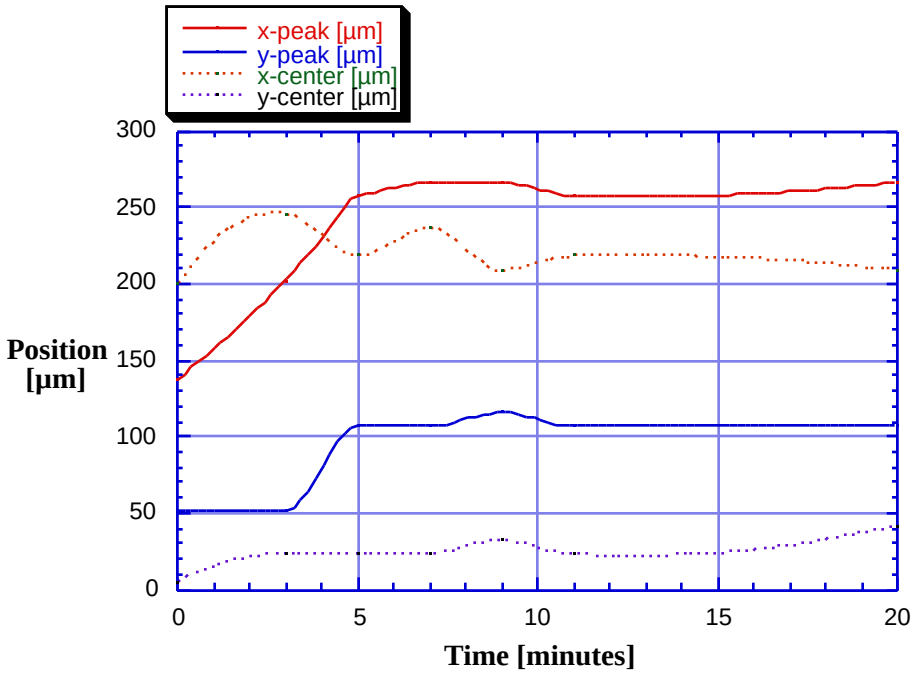

It seems, that after the warm-up (5 minutes after opening the shutter), beam spot become stable, and the measurement accuracy of ~ 20 µm can be achieved. Yet, the peak/centeroid discrepancy is about 50 µm along x-axis, and 70 µm along y-axis. If it is ever a problem, spacial filter can be built to remove high transverse modes from the beam profile.

Using a centeroid for beam alignment is more proper, since it is the way the alignment is done. However, determining the centeroid position takes much longer time than finding a peak intensity on the image, so there is certain advantage of not filtering out the structure. After all, the 70 µm discrepancy is smaller than uncertainty in the beam position, due to lack of reference line.

(b) *630 nm laser*

For 630 nm laser the theoretical limit at the undulator edges is 0.90 mm. The achieved spot-size at the edges is ~**1.6 mm**. We think, that this rather poor performance is due to neglecting aberrations in the focusing optics (designed by Melles Griot). The focusing lens is located few millimeters away from the fiber which effective waste is ~ 10 µm. During the shut-down we'll attempt to fix the problem, by adding another lens.

Eventually, we should be able to use 630 nm laser for BPM measurements (when we start lasing (!), IR cut filters will be installed).

It was also suggested to replace red laser with the blue one. 430 nm lasers are commercially available. Yet, as it can be seen above, the replacement will only result in the small improvement of the theoretical limit down to 0.74 mm. It is not evident, that such a step will be helpful.

(c) *long term stability*

So far, we did not notice any noticeable long term changes in the positions of the lasers. That may just indicate our poor monitoring system. Jamie warns, that fiber-coupling of the red laser may lead to thermal drifts.

4. ND filters

Another problem is associated with filter use. Inserting the ND filters (which is often required by the experimental conditions) shifts the beam position by as far as 500 µm. The most plausible explanation so far is that filters are made as a small angle wedges on purpose, to cut interference. Some inquires and experimentation will be done soon, to understand the problem.

5. Summary

To improve the laser system, the following steps can be made:

1. Improve the beam control by replacing the mirror mounts.
2. Insert the optical flat between the mirrors for fine control of beam translation.
3. Build a proper reference system, to monitor the beam with high precision.
4. Learn how to deal with the ND filters.
5. Find a coated vacuum window.
6. Improve the focusing optics for the red laser .
7. If needed, build a spacial filter for IR laser.
8. Build a better enclosure for the laser table, to eliminate the air currents and check the temperature stability inside the enclosure. Check all the optical elements on the sensitivity to mechanical vibrations.

Some of the items on the list are very well understood and will be done in the near future. Some are not even approached yet. In principle, everything on the list needs to be done, before we can fulfill the design goal of *having controlled and monitored alignment laser beam within 50 µm of the undulator magnetic axis*. Considering the cost and experimental uncertainty of the above task list, I think that the most reasonable approach is a gradual improvement, based on the experimental needs.