5 THE SASE FEL MEASUREMENT

5.1 Alignment and Beam Tuning

In section 2.7.2 we discussed the theory of the SASE (Self Amplified Spontaneous Emission) process. The theory of the high-gain single pass FELs and SASE is described also in ref. [4,19-28]. Previously SASE was observed from visible to infrared using a MIT's 60 cm long micro-undulator in ATF [29]. In this section we will describe how the experiment is done with radiator wiggler of the HGHG experiment without utilizing the modulator wiggler and the CO_2 laser.

In order to get a good SASE signal out of the wiggler it is important to match the electron beam to wiggler by beam tuning, as described in Chapter 3. Another requirement is beam alignment. The electron beam should travel along the wiggler axis. A He-Ne laser is used as a reference for the alignment, and before every run we check the overlap of the electron beam with the He-Ne reference, by viewing the He-Ne and electron spot positions on the BPMs.

We note that the He-Ne laser pointing drifts with room temperature, up to about 40 μrad, which corresponds to 300-500 μm displacements on the wiggler cameras. Since this movement is slow, this problem may be corrected by realigning the He-Ne laser relative to fixed fiducials no more than several hours before a run.

Another issue is an offset between the electron trajectories outside the wiggler and inside the wiggler. This effect is due to the particular construction of the wiggler magnet. Magnetic measurements of the wiggler indicated that the trajectory of the electrons in the wiggler is offset 700 μ to the right. This offset is taken into account in the interpretation of the pop-in monitors readouts.

The first wiggler pop-in monitor, designated W1, is right before the wiggler. The second, the third and the fourth pop-in monitors (W2, W3, W4) are in the wiggler. The fifth pop-in monitor (W5) is right after the wiggler. (Figure 5-1)

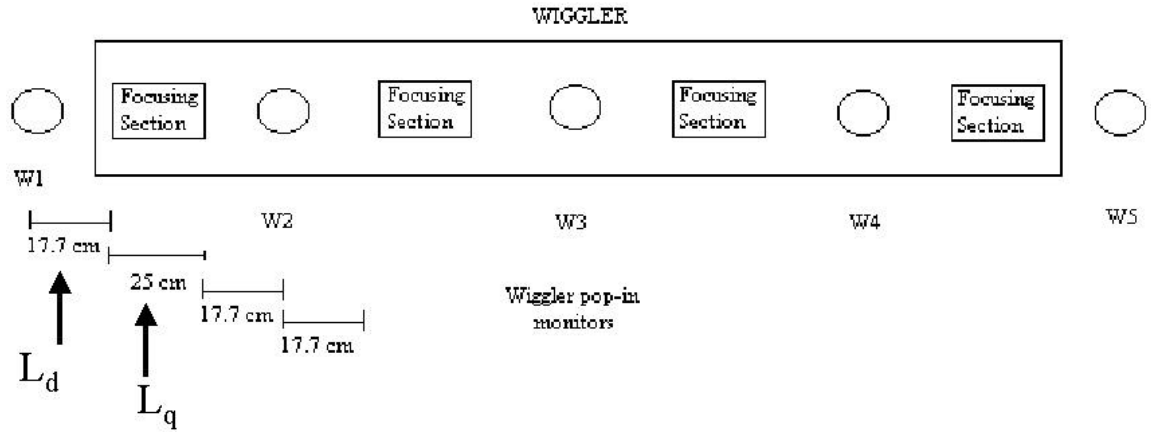

Figure 5-1 Radiator wiggler diagnostics. W1 through W5 are beam monitors using CCD cameras.

The wiggler is 2 m long and has 60 periods with a period of 3.3 cm. The distance between the wiggler pop-in monitors is 60.4 cm. Focusing (and steering) electromagnet sections are located in between each pair of pop-in monitors. The wiggler's natural focusing is in the vertical direction only. The purpose of these focusing magnets is to equalize the vertical and horizontal focusing strength of the wiggler. The electromagnets, which have a four-wire configuration, can also be used to steer the electron beam. To align the electron beam with the He-Ne laser we look first at the W1 monitor and steer the electron beam, using trim magnets (IT2H and IT2V in Figure 3.14), to overlap the He-Ne laser. The ATF frame grabber is used to determine precisely the beam center. Then we look the other wiggler pop-in monitors. A pair of trim magnets (IT3H and IT3V in Figure 3.14) is positioned after the first wiggler monitor and used to correct the electron trajectory at the end of the wiggler. It takes usually several minutes to align the electron beam with the He-Ne laser in all monitors. The in-wiggler trim magnets could be used to correct for the trajectory inside the wiggler. However, due to the wiggler's good trajectory this is not necessary.

In the course of the studies we developed various correction programs. One program, in particular, automatically measures the position of the He-Ne laser and the electron beam at all monitors in the wiggler. The program, which runs in Labview [30] on a PC, communicates with the accelerator's control program. It is capable of inserting

the beam monitors, run the frame grabber and receives the measurement data. The program calculates the transport matrices through the wiggler to each monitor. Then, assuming the He-Ne laser path is vertically parallel to the axis but offset by some unknown amount, it fits calculated values to the beam offset and angle as well as the He-Ne offset. Using a response matrix measured for each corrector (i.e. how much a steering magnet moves the electron beam per unit current at each monitor) it calculates a correct current for the proper trajectory. This method works quite well and obtains an accuracy of 50 μ.

We also developed similar program that finds the trajectory without using the He-NE laser. This program uses the focusing effect of the wiggler to determine the electron beam's position in the wiggler. For an ideal trajectory, a change in the focusing section current should not affect the trajectory. If the trajectory is affected, one may deduce the beam's offset. Thus, the program measures the electron beam position at each monitor for a few focusing magnet current values, and calculates the trim magnet's current for a correct trajectory.

The vertical matrices that we calculated for the beam transport to each pop-in diagnostic are shown below.

$$M1 := \begin{pmatrix} 1 & L_d \\ 0 & 1 \end{pmatrix}$$

$$M2 := \begin{bmatrix} \cosh\left(\sqrt{K_q - K_d}\cdot L_q\right) & \frac{1}{\sqrt{K_q - K_d}}\cdot\sinh\left(\sqrt{K_q - K_d}\cdot L_q\right) \\ \sqrt{K_q - K_d}\cdot\sinh\left(\sqrt{K_q - K_d}\cdot L_q\right) & \cosh\left(\sqrt{K_q - K_d}\cdot L_q\right) \end{bmatrix}$$

$$M3 := \begin{bmatrix} \cos\left(\sqrt{K_d}\cdot L_d\right) & \frac{1}{\sqrt{K_d}}\cdot\sin\left(\sqrt{K_d}\cdot L_d\right) \\ -\sqrt{K_d}\cdot\sin\left(\sqrt{K_d}\cdot L_d\right) & \cos\left(\sqrt{K_d}\cdot L_d\right) \end{bmatrix}$$

$$A_0 := M3\cdot M2\cdot M1$$

$$A_1 := M3\cdot M2\cdot M3\cdot A_0$$

$$A_2 := M3 \cdot M2 \cdot M3 \cdot A_1$$

$$A_3 := M1 \cdot M2 \cdot M3 \cdot A_2$$

Eqn 5-1

Where L_d and L_q are drift and quadrupole lengths respectively as shown in Figure 5-1. $K_d = \frac{G_d}{B_r}$ where G_d is the gradient of the magnetic field and $B_r = \frac{E(MeV)}{0.2998}$ for the drift section in the wiggler and the G_d is measured as 0.08 kG inside the wiggler. Similarly $K_q = \frac{G_q}{B_r}$ where G_q is the gradient of the magnetic field for the focusing section inside the wiggler. The vertical magnetic field cancels out when the quadrupole current is 33 A. The 'A_n' matrices are the transport matrices from the first beam monitor to the $(n+2)^{nd}$ monitor. [31]

In horizontal direction there is no wiggler focusing. Thus the matrices modifies as follows:

$$M1 := \begin{pmatrix} 1 & L_d \\ 0 & 1 \end{pmatrix}$$

$$M2 := \begin{bmatrix} \cos\left(\sqrt{K_q} \cdot L_q\right) & \frac{1}{\sqrt{K_q}} \cdot \sin\left(\sqrt{K_q} \cdot L_q\right) \\ -\sqrt{K_q} \cdot \sin\left(\sqrt{K_q} \cdot L_q\right) & \cos\left(\sqrt{K_q} \cdot L_q\right) \end{bmatrix}$$

$$M3 := \begin{pmatrix} 1 & L_d \\ 0 & 1 \end{pmatrix}$$

Eqn 5-2

When the experiment just got started, we were not able to get a good vertical alignment in the wiggler. Following some studies we realized that the wiggler is positioned vertically off by 400 μ from the beam axis, as determined by the upstream magnetic elements.

We operated for a while with the offset in the wiggler's position, using the software described above to correct the trajectory against this offset. Later on, in order to simplify the operation, the wiggler has been resurveyed to eliminate the offset. After this

correction the alignment of electron beam with the He-Ne laser became easier in both horizontal and vertical directions to the extent that it was not necessary to use the programs to achieve a good beam trajectory.

5.2 Measuring the SASE Signal and The Gain

The radiation coming out of the wiggler is transported to the diagnostic station in FEL room. As described in the section 4.2, the indium-antimonite point detector [18] with a 1 mm sensitive area is used to measure the energy of the SASE signal. The detector signal calibration is 20 pJ/Volts at a wavelength of 5.3 μm. The typical SASE signal from the detector is between 2-10 Volts. The spontaneous radiation from the wiggler is about several hundreds mV. Thus a signal above this level is basically the result of gain in the Free Electron Laser. Gain is defined as the ratio of the SASE to the spontaneous radiation. The high-energy slit (HES), located in high-energy electron beam transport line (H-line) is used to control the charge of the beam. The two jaws can independently be moved by a stepper motor enabling us to block a part of the beam, thus reduce the charge. We record the signal as a function of charge, as measured by a Faraday cup at the end of the beam line. The repetition-rate of the accelerator is 1.5 Hz. Therefore the SASE and charge signals are produced every 0.66 sec. The Faraday cup produces a fast signal, on the ns scale and the SASE detector signal is slow, in the μs scale. A Tektronix 644-B fast oscilloscope [32] is used to measure the Faraday cup signal and a Tektronix 380 [33] is used to measure the detector signal. The detector produces a negative waveform with a peak that is proportional to the output energy. The gating property of the scope is used to measure the amplitude of the signal. The Faraday cup output is also negative and the charge is proportional to the area under the signal. The signal is terminated by 50 Ω terminator thus 1 nC corresponds to an area of 50 nVsec. The Labview program reads and records the measurements from each scope for every shot, using the GPIB protocol. As we change the opening of the HES, the charge varies and thus we obtain SASE signal as a function of charge. (See Figure 5-2)

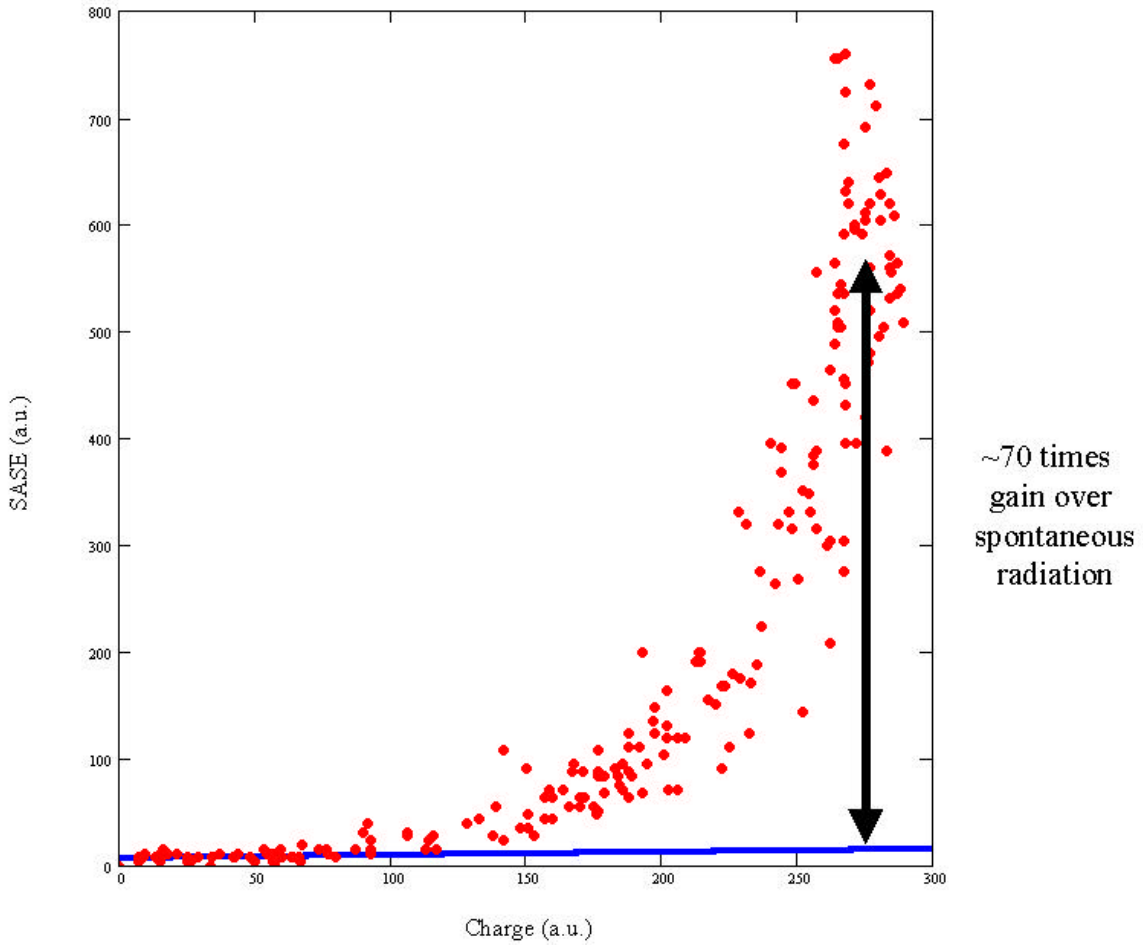

Figure 5-2 SASE signal vs. Charge Plot. The blue line is the extrapolated spontaneous emission level; the red dots are individual measurements of the power output.

The spontaneous radiation is dependent linearly on the charge (Eqn 2.7-38) whereas the SASE is exponentially dependent on charge. The blue line represents the spontaneous radiation, as extrapolated from the low charge points, assuming that at a very low charge there is no gain (thus the signal is just spontaneous emission). Thus the gain, at any charge, is the ratio of average SASE signal to the extrapolated spontaneous line. We usually refer to the 'gain' as the value of the ratio at the largest charge.

5.3 Spectrum Measurement of the SASE FEL

5.3.1 The Spectrometer

Model 270M spectrometer from SPEX industries Inc. is used to measure the spectrum of the 5.3 μm radiation.

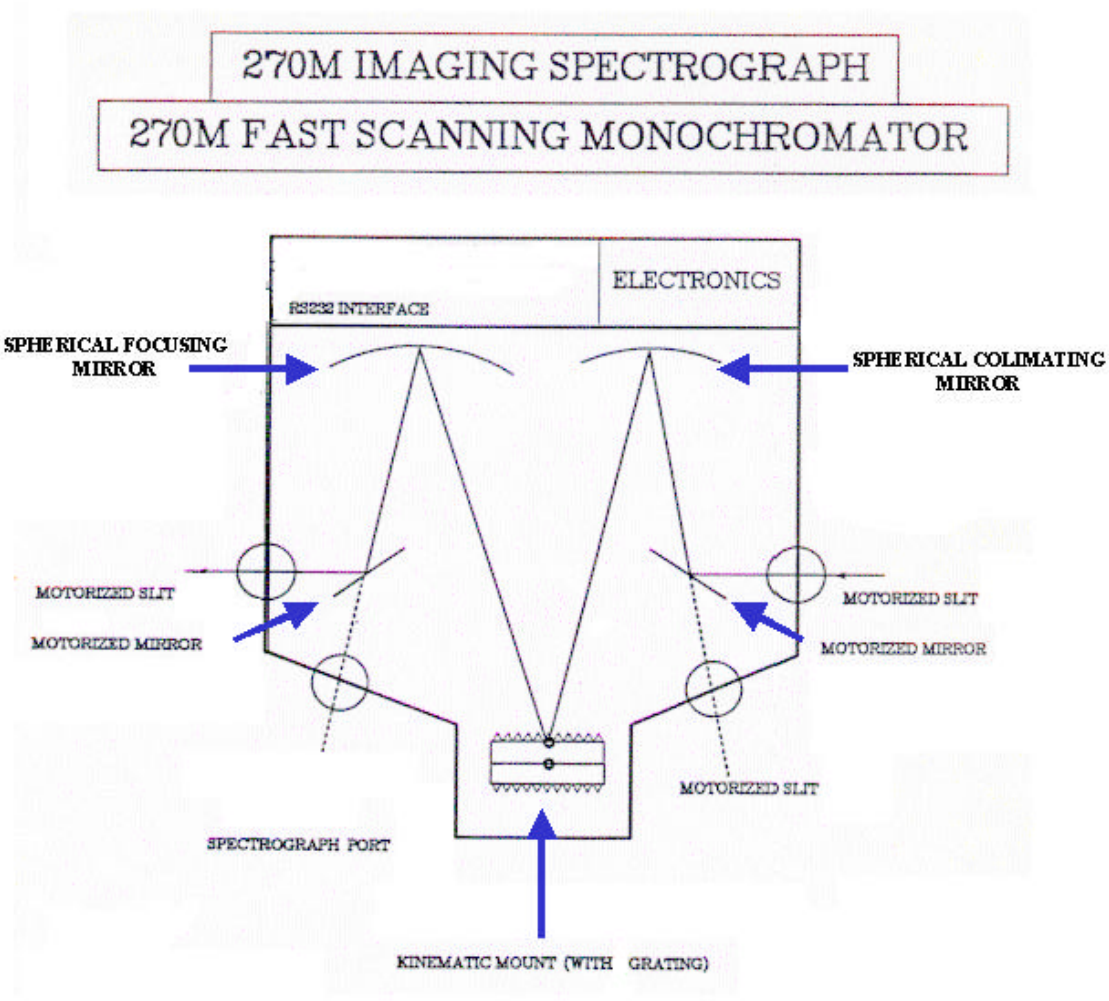

Figure 5-3 The SPEX 270M spectrometer Layout

The spectrometer has two available entrance slits on the right hand side in Figure 5-3, the selection of the entrance to be used is done by a motorized mirror. Similarly, the

spectrometer has two exit ports: one is a monochromator slit and the other is spectrograph port, also selectable by a motorized kinematic mirror.

The Figure 5-4 shows the equivalent optics of the spectrometer.

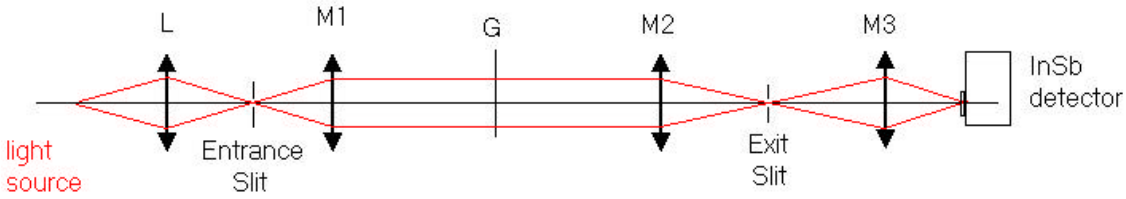

Figure 5-4 Equivalent Optics of the SPEX 270M Spectrometer

L: The lens used to collect the beam into the entrance slit.

M1: Spherical collimating mirror

M2: Spherical focusing mirror

M3: Collecting lens for the detector

G: Grating

Table 5-1 shows the properties of the spectrometer.

Focal Length	0.27 m
Aperture	f/4
Mechanical scanning range	0-1100 nm (for a groove density of 1200 gr/mm)
Flat field	25 x 13mm (width x height)
Dispersion	3.1 nm/mm (for a groove density of 1200 gr/mm)
Resolution	0.1 nm at 546.07 nm
Accuracy	0.1 nm
Repeatability	0.05 nm
Drive step size	0.03125 nm
Scan Rate	70 nm/sec
Dimensions	39.4 x 41.4 x 19 cm (width x length x height)

Table 5-1 The properties of the SPEX 270M Spectrometer

The maximum aperture that the spectrometer can accept is f/4 that means the diameter of the beam divided by the focal length of lens L is maximum 1/4. The dispersion, in nm wavelength change that produces one mm of position change at the exit slit, is inversely proportional to the groove density. Thus the mechanical scanning range and groove density determine the wavelength range. At a groove density of 150 gr/mm (grooves per mm), the scanning range would be 0-8800 nm and the dispersion would be 24.8 nm/mm. 150 gr/mm grating is needed in order to scan about the 5 μm part of the spectrum.

The particular grating that we use for this experiment has 150 gr/mm and a transmission of 70% at 5.3 μm.

The monochromator exit slit is used to measure the specific wavelength output. For a given grating angle, a very narrow bandwidth centered at a given wavelength can pass the exit slit. The spectrograph port, which is larger, is used to measure the spectral distribution of the whole input beam. This measurement can be done with an array detector or a camera, and the horizontal axis would correspond to wavelength.

The slits, kinematic mirrors and the grating angle are computer controlled, using an RS 232 interface protocol.

5.3.2 Calibration and Alignment of the Spectrometer

The He-Ne laser is used to align and calibrate the spectrometer. Referring to, we retract the kinematic mirrors and align He-Ne through the entrance and the exit slits. This defines the optical axis through the spectrometer. Then the kinematic mirrors are inserted, and now the He-Ne light is reflected from the grating, which is the main component to be aligned.

We set the grating angle to 0° (wavelength is 0 nm), which is just a total reflection from the grating. In this position there is no diffraction. Sometimes the grating may have some rotational offset around the axis 3 (see Figure 5-5), which causes an offset in the wavelength reading. When there is no offset, light exits the spectrometer in the middle of the slit. Thus by tweaking the adjustment screw we correct the offset.

The second adjustment is the vertical tilt (rotation around axis 1), which causes vertical misalignment at the exit slit. The tilt is adjusted therefore the beam at the exit slit is at the same height as the input beam.

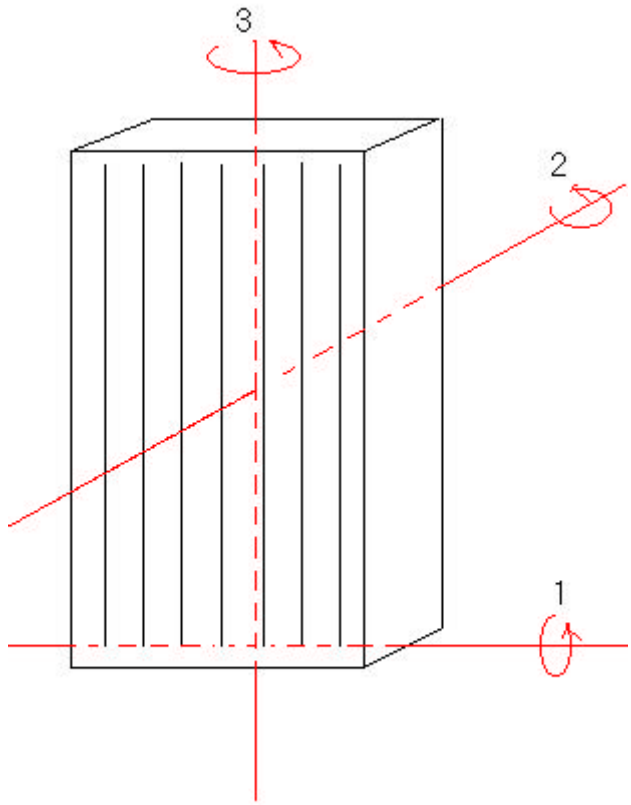

Figure 5-5 Rotation axes of the grating

The third adjustment is the tilt around axis 2, which causes vertical misalignment for the first and higher harmonics. Thus by setting the grating angle to one of the higher harmonics of the He-Ne laser beam (633,1266…nm) we correct this tilt and make the grooves parallel to the vertical axis.

The “resolving power” defined by the Rayleigh criterion as the ability of the spectrometer to distinguish the two adjacent spectral lines is written as

$$R = \frac{l}{d\,l} \qquad \text{Eqn 5-3}$$

where dλ is the difference in wavelength between the two equal intensity spectral lines. The two peaks are considered resolved when the maximum of one falls to the minimum of the other. For a grating, *R* is given as [34]

$$R = \frac{l}{d\,l} = KnW_g = KN \qquad \text{Eqn 5-4}$$

Where λ is the central wavelength to resolve, W_g is the illuminated width of the grating, *N* is the total number of grating in illuminated area and *K* is the spectral order.

In order to get a better resolving power we need a large divergence at the entrance slit, so as to illuminate as much as possible of the surface of the grating. Thus we use a 1” focal length and 1” diameter Zn-Se lens (f/1) in front of the spectrometer to collect the radiation into the entrance slit. The measured full beam size of the SASE radiation is approximately 3 mm in diameter around the spectrometer position. Thus the effective aperture is roughly f/8. The acceptance of the spectrometer is f/4, thus we are within the acceptance of the spectrometer. We align the lens such that the beam is well focused at the entrance slit and alignment is preserved at the exit slit. The focal length of the lens at the He-Ne wavelength is 10% different than at the SASE wavelength, but for the short focal length of the lens this does not make a significant difference.

Finally, there is one more issue to deal with. The divergence of the input beam at the entrance slit results a divergence at the exit slit. Since the detector cannot be placed close enough to the exit slit, the radiation may diverge too much for the measurement. Thus we place a collecting lens following the exit slit. (See Figure 5-4)

Since the He-Ne laser beam is well co-aligned with the SASE, this alignment procedure readies the spectrometer to measure the spectrum of the SASE radiation.

5.3.3 The SASE Spectrum

The In-Sb detector located after the exit slit with a collecting lens in front of it measures the SASE signal. We set the slit to 1mm opening, which means the maximum dispersion of the spectrometer is 24.8 nm. We use a Labview program to collect spectrum data. The program scans the wavelength in a given range with a given step size and also with a given averaging at each wavelength. The reason for averaging is the fluctuations in the SASE signal. Similar to the gain measurement setup, the computer communicates with the scope and records the signal as a function of wavelength.

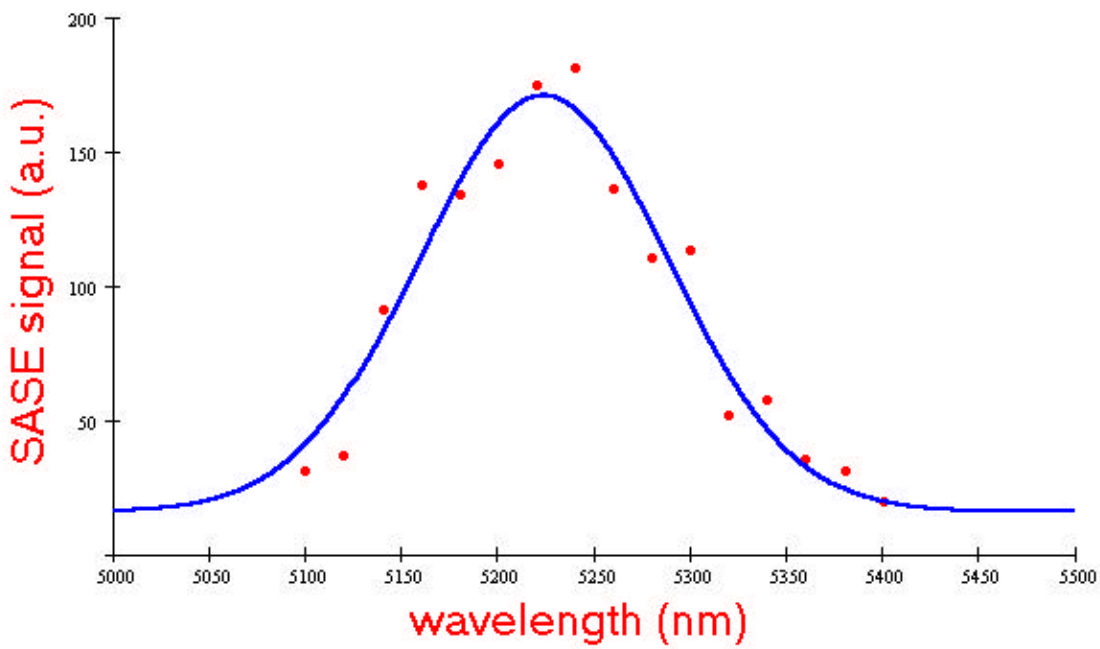

Figure 5-6 The SASE spectrum

The Figure 5-6 shows the spectrum of the SASE radiation. The blue curve is the gaussian curve that fits to the data. The peak wavelength is about 5.25 μm and the full width at half maximum (FWHM) is about 150 nm.