Department of Energy
Brookhaven Group
P.O. Box 5000
Upton, New York 11973

RECEIVED
MAR 21 2001
BGRR PROJECT

March 21, 2001

W.C. Lieneck
MAR 21 2001

Mr. Michael J. Bebon
Brookhaven Science Associates, LLC
Brookhaven National Laboratory
Upton, New York 11973

Dear Mr. Bebon:

SUBJECT: APPROVAL OF UNREVIEWED SAFETY ISSUE DETERMINATION / SAFETY EVALUATION (USID/SE) FOR ABOVE GROUND CANAL AND WATER TREATMENT HOUSE REMOVAL AT THE BROOKHAVEN RESEARCH REACTOR DECOMMISSIONING PROJECT (BGRR-SE-01-01)

The Brookhaven Area Office (BAO) has reviewed your request to begin removal of the Above Ground Canal and Water Treatment House. BAO has determined that the actions referenced in USID/SE BGRR-SE-01-01 (Rev.0) comply with the requirements of DOE Order 5480.21, Unreviewed Safety Questions and DOE-EM-STD-5503-94, EM Health and Safety Plan Guidelines. Therefore, Above Ground Canal and Water Treatment House removal is authorized.

If you have any questions regarding this matter, please contact Mark Parsons of my staff at extension 7978.

Sincerely,

M. Holland

Michael D. Holland
Area Manager
Brookhaven Area Office

cc: R. Desmarais, BAO
M. Dikeakos, BAO
M. Parsons, BAO
G. Penny, BAO
F. Petschauer, BNL

Pcdocs # 34356/435.20.1.1

Environmental Management Directorate

BROOKHAVEN
NATIONAL LABORATORY

Building 860
P.O. Box 5000
Upton, NY 11973-5000
Phone 631-344-3434
Fax 631-344-2531
Bebon@bnl.gov

managed by Brookhaven Science Associates
for the U.S. Department of Energy

www.bnl.gov

March 14, 2001

Mr. Michael D. Holland
DOE Brookhaven Group Manager
U.S. Department of Energy
Brookhaven Group
Upton, NY 11973-5000

SUBJECT: UNREVIEWED SAFETY ISSUE DETERMINATION/SAFETY EVALUATION (USID/SE) FOR THE ABOVE GROUND CANAL AND WATER TREATMENT HOUSE REMOVAL

Dear Mr. Holland:

Enclosed for your approval is the subject document (BGRR-SE-01-01, Rev. 0, dated March 14, 2001) covering WBS 4.01 - Above Ground Canal and Water Treatment House Removal. This document was informally submitted to the DOE Project Manager for the BGRR Decommissioning Project for technical review. All comments were addressed and the resolutions incorporated into the enclosed document. Physical removal cannot begin until DOE approval is received.

If you have any questions regarding the contents or analysis of BGRR-SE-01-01, please do not hesitate to call Steven Moss (ext. 7639) or Walter Lieneck (ext. 2394).

Sincerely yours,

Michael J. Bebon
Interim Assistant Laboratory Director
for Environmental Management

SM/mcb
Enclosure: BGRR-SE-01-01, Rev. 0
cc (w/enc.): M. Parsons
cc (w/o enc.):

K. Corbett
M. Cowell
F. Crescenzo, DOE/BAO
R. Desmarais, DOE/BAO
M. Dikeakos, DOE/BAO
S. Layendecker
W. Lieneck
S. Maloney
S. Mallette, DOE/BAO
J. Meersman
S. Moss
S. Musolino
L. Nelson, DOE/BAO
G. Penny, DOE/BAO
F. Petschauer
S. Pulsford
T. Sheridan
File WBS 4.1

Safety Evaluation Number: **BGRR – SE – 01 – 01** **Revision Number:** 0

Prepared by: S. H. Moss 3/14/00 **Date:** 03/14/01

Description of proposed activity: WBS 4.01, Above Ground Canal and Water Treatment House Removal

The Canal House - Building 709 is a separate structure, which is above the Fuel Transfer Canal. The Canal is connected to Building 701 and the deep pit area. The Canal House is not. The structure is metal-framed and 'cemestos'-sided (Asbestos Containing Material), approximately 39 feet long, 15 feet wide and 19 feet high with a layered/built-up roof (Asbestos Containing Material). When the reactor was refueled, spent fuel was first placed into the deep pit for radiation decay. The elements were later moved underwater to the transfer canal, where they were prepared and loaded into casks for shipment.

The Water Treatment House – Building 709A is attached to Building 709. It is a cement-block-structure approximately 39 feet long, 14 feet wide, and 12 feet high with concrete planking and a layered/built-up roof (with ACM). It has four cells separated by walls, that previously contained the water-filtration and purification systems used to maintain the water in the canal.

The interior surfaces of the Canal and Water Treatment Houses are radioactively contaminated. The 'cemestos' siding, which compose the walls of the Canal House, is Asbestos-Containing-Material (ACM).

The activities proposed here include:

1) De-energize and permanently isolate all power (electrical) and water sources from the buildings
2) Perform decontamination and stabilization activities to remediate as much as practical, all radiological and hazardous materials
3) Removal of all abandoned equipment, materials and components inside the buildings, leaving only an empty building
4) Demolish and dispose of the roofing material (with ACM) from the Water Treatment House
5) Demolish and dispose of the ACM materials from the Canal House
6) Demolish and dispose of the Water Treatment House cement block walls
7) Demolish and dispose of the Canal House superstructure
8) Install drainage control around the canal opening at elevation 109'

Purpose:

The purpose of this portion of WBS 4.01 for the BGRR Decommissioning Project is Removal of Above Ground Canal House and Water Treatment House. It specifically consists of two parts: de-energize, stabilize and remove abandoned equipment from the Canal and Water Treatment Houses; and demolish the Canal and Water Treatment Houses to grade elevation.

References:

(1) Procedure No. ERD-OPM-4.4, "Safety Evaluations for Unreviewed Safety Issue Determinations", Rev.0 dated 1/18/00.
(2) BGRR-002, "Hazard Classification and Auditable Safety Analysis for Brookhaven Graphite Research Reactor (BGRR) Decommissioning Project", Rev. 3 dated January 19, 2001, as approved by DOE 01/31/01.
(3) BGRR-001, "Brookhaven Graphite Research Reactor (BGRR) Project Management Plan", Rev. 1 dated March 2, 2000.
(4) BNL ES&H Manual Standard 1.3.3, "Safety Analysis Reports / Safety Assessment Documents", Rev.1 issued July, 2000. [URL= https:sbms.bnl.gov/ld/ld08/ld08d081.htm]
(5) DOE-STD-1027-92, "Hazard Categorization and Accident Analysis Techniques for Compliance with DOE order 5480.23, Nuclear Safety Analysis Reports" Change Notice No. 1 dated September 1997.
(6) LA-12846-MS, "Specific Activities and DOE-STD-1027-92 Hazard Category 2 Thresholds", LANL Fact Sheet issued November 1994.
(7) LA-12981-MS, "Table of DOE-STD-1027-92 Hazard Category 3 Threshold Quantities for the ICRP-30 List of 757 Radionuclides", LANL Fact Sheet issued August 1995.
(8) BNL Action Memorandum for Brookhaven Graphite Research Reactor Canal and Water Treatment House Removal Action, dated January 5, 2001.
(9) DOE/BHG Letter to NYSDEC and EPA dated January 11, 2001 (from Holland to Lister and Logan) transmitting the Action Memorandum for the BGRR Canal and Water Treatment House Removal Action, dated January 5, 2001.
(10) DOE/BHG Letter to BNL/BSA dated January 22,2001 (from Mallette to Bebon) approving Action Memorandum for BGRR Canal and Water Treatment House Removal Action.

(11) BGRR-037, "ERD-BGRR Task-Specific Job Safety Analysis to De-energize, Stabilize and Remove Abandoned Equipment from the Canal and Water Treatment Houses", dated February 12, 2001. (Copy included within Attachment No. 1)
(12) BGRR-038, "ERD-BGRR Task-Specific Job Safety Analysis for Demolition of the Canal and Water Treatment Houses ", draft February, 2001. (Copy included within Attachment No. 1)
(13) ERD-BGRR-TP-01-01, "Technical Work Document to De-energize, Stabilize & Remove Abandoned Equipment from the Canal and Water Treatment Houses", dated January 30, 2001. (Copy included within Attachment 2)
(14) ERD-BGRR-TP-01-02, "Technical Work Document for Demolition of the Canal and Water Treatment Houses", draft February, 2001. (Copy included within Attachment 2)
(15) BGRR-SE-99-04, Removal of Above Ground Duct for BGRR-DP, as approved by DOE 06/08/00.
(16) NUREG/CR-0672, "Technology, Safety and Costs of Decommissioning a Reference Boiling Water Reactor Power Station", June 1980.
(17) Long Island Power Authority – Shoreham Nuclear Power Station – NRC Docket No. 50-322, "Updated Decommissioning Plan", February 1993.
(18) Brookhaven Graphite Research Reactor Decommissioning Project Health and Safety Plan (HASP)-BGRR-0006, dated September, 1999.
(19) BNL FFA under CERCLA Section 120, February 28, 1999 [IAG between U.S. EPA – Region II, U.S. DOE and NYSDEC].

SCREENING CRITERIA

Safety Function(s) of Systems Affected

1. Will the proposed activity affect the safety function(s) or failure mode(s) of the equipment/facility? Y (N) N/A

Because of its defunct status and defueled state, the BGRR has no current requirements for redundant systems and/or safety class or safety significant SSCs (Systems, Structures and Components). Therefore, no safety functions exist that are directly associated with current components or equipment considered part of the scope of the BGRR Decommissioning Project. Where no safety functions exist, there can be NO effect on the safety function by the proposed activity.

The Canal and Water Treatment Houses were shutdown after all BGRR fuel was removed from BNL site in 1972. They no longer serve the purpose for which they were designed and constructed. Hence, they may be considered as being Out-Of-Service or failed. No deconstruction activities or potential accidents associated with such activities can have any negative effect on the ability of the buildings/contents to perform their original functions, which are obsolete.

The proposed activity will not affect the safety function(s) of the facility [as there are none]; it will not affect the failure mode(s) of the equipment/facility, as the equipment/facility was previously and permanently shutdown. The answer to Question 1 of Safety Function(s) of System Affected is '**NO**'.

2. Will any new failure modes be introduced by the proposed activity? (Y) N N/A

BGRR-002, "Hazard Classification and Auditable Safety Analysis for the BGRR Decommissioning Project", Rev. 3 dated January 19, 2001 [Ref. 2], was approved by DOE on 01/31/01. It specifically excludes from review or consideration the impact of contamination removal activities directly associated with the decommissioning process. Guidance for the selection of appropriate failure modes to consider was taken from other decommissioning projects [Refs. 16 & 17], as well as previously approved USID/SEs associated with the Brookhaven Graphite Research Reactor Decommissioning Project [Ref.15]. The failure modes selected and associated accident analyses presented in Appendix A are; Crane Load Drop, Waste Container Drop, Contaminated Waste Bag Rupture/Fire, Explosion of LPG Leaked from a Forklift, Oxyacetylene Explosion, Contamination Control Envelope Rupture, and Vacuum Filter Bag Rupture.

The ERD-BGRR Job Safety Analyses for the Canal and Water Treatment House Removal Actions [Refs. 11 & 12] and the ERD-BGRR Technical Work Documents for the Canal and Water Treatment House Removal Actions [Refs. 13 & 14], do not preclude the use of any of the above listed equipment (except for barring the flame cutting of contaminated items). Therefore, none of the accident scenarios listed above can be discounted at face value. Based on the physical characteristics of the materials to be removed (concrete, metal sheeting and ACM), Combustible Waste Fire was deemed not a credible accident scenario.

With respect to the BGRR-ASA, the proposed activity represents a new activity, with its own unique spectrum of potential failure modes. Specifically, the proposed activity (CERCLA Time-Critical Removal Action) represents an activity not covered by the BGRR-ASA (per Table 1.4-1 – ASA Applicability Table of Section 1.4 – Scope of Work).

As the proposed activity is specifically defined as being outside the scope of the BGRR-ASA and consists of demolition and remediation activities to be performed as part of a CERCLA Time Critical Removal Action, it may well introduce new failure modes not previously considered under the BGRR-ASA. The answer to Question 2 of the Safety Function(s) of System Affected is '**YES**'.

Effects on Safety

1. Could the proposed activity increase the probability of occurrence of an accident previously evaluated in the ABD? Y (N) N/A

For the Brookhaven Graphite Research Reactor Decommissioning Project, the Authorization Basis Documents include; the BGRR-ASA, Rev.3 (which was approved by DOE 01/31/01), the DOE Safety Evaluation Report as approved 01/30/01, the ERD Quality Assurance Implementation Guidelines, BGRR-DP Environment, Health and Safety Plan, and all DOE-approved USID/SEs for the BGRR-DP. Of those documents, only the BGRR-ASA contains original accident analysis data (the DOE-SER reiterates and amplifies on the contents of the ASA, but includes no new accident scenarios nor changes to the ones in the BGRR-ASA).

Even though the BGRR-ASA accident analysis excludes actual D&D work-related accidents; it must still be reviewed for the potential impact of the proposed activity on the probability of occurrences for the accident scenarios contained within the BGRR-ASA. Because of the "Routine Risk" nature of the defueled BGRR (classified as a "Radiological Facility"), a rigorous probabilistic risk assessment was not required as part of the Auditable Safety Analysis. Instead, using a graded approach and the guidance offered in BNL ES&H Standard 1.3.3, {https:sbms.bnl.gov/ld/ld08/ld08d081.htm}[Ref. 4], the Risk Assessment Tables of Section 3.2 of the BGRR-ASA were developed.

Among the events analyzed in BGRR-ASA Section 3.2 – Risk Assessment are; Seismic Event, High Winds, Graphite Dust Detonation, Loss of Pile Negative Pressure System Ventilation, Loss of Pile Negative Pressure System Filtration, Crane Load Drop, Fire, Facility Worker Exposure to Toxic Material.

The proposed activity has no capability to impact the probability of occurrence of Seismic Events or High Winds (which are natural phenomena). Additionally, as the proposed activity is limited to the removal of the Canal and water Treatment Houses to Grade Elevation; it has no potential to impact the probability of events occurring at other local buildings e.g., Buildings 701 & 702. This eliminates from further consideration; Graphite Dust Detonation, Loss of Pile Negative Pressure System Ventilation, Loss of Pile Negative Pressure System Filtration, and Building 701 Crane Load Drop. The only remaining accident scenarios from the BGRR-ASA to be considered are: Risk Assessment No. 007, covering Fire; and Risk Assessment No. 008, covering Facility Workers Exposure to Toxic / Hazardous Materials.

The proposed activity involves the exposure by removal (including cutting) of contaminated equipment, structural material and potentially contaminated insulation/coating(s). There are no significant amounts of combustible materials involved and primarily mechanical means will be used for separation (flame cutting, while specifically excluded only for contaminated material, is not expected to play a major role). The accident analysis of the proposed activity in Appendix A includes three accident scenarios, which already and independently address the potential for initiation of fire. These events are; Oxyacetylene Explosion, Explosion of LPG Leaked from a Forklift and Contaminated Waste Bag Rupture/Fire. The proposed activity, having its own fire probability assessment, represents no increase in the probability of fire as defined in BGRR-ASA Risk Assessment No.7.

Finally, as 'Potential Initiators' under Risk Assessment No. 008 covering Facility Worker Exposure to Toxic/Hazardous Materials are; natural phenomenon, operator error, or equipment failure causing breach of deactivated piping or equipment containing residual hazardous/toxic material. The only BGRR-DP workers or Sub-contractor workers are those directly involved in the decommissioning process, including the performance of the proposed activity. Therefore, the proposed activity does not increase the probability of occurrence of this event. It merely reflects one of the potential initiators of this event. The proposed activity represents no increase in the probability of occurrence of the event as defined in BGRR-ASA Risk Assessment No. 008.

So the answer to Question 1 of 'Effects on Safety' is '**NO**'.

The proposed activity does not increase the probability of any accident evaluated in the Authorization Basis Documentation.

2. Could the proposed activity increase the probability of occurrence of a malfunction of equipment, systems, or components that are Important-to-Safety? Y (N) N/A

As was already discussed in response to Screening Criterion No. 1 under 'Safety Function(s) of Systems Affected'; the BGRR has no current requirements for redundant systems and/or safety class or safety significant SSCs (Systems, Structures and Components) due to its defunct status and defueled state. Therefore, no safety functions exist that are directly associated with the proposed activity covered by this USID/SE. Without equipment, systems or components that are Important-to-Safety, there can be no probability of occurrence of a malfunction of equipment, systems or components that are Important-to-Safety; nor any increase in same.

The proposed activity **COULD NOT** increase the probability of occurrence of a malfunction of equipment, systems or components that are Important-to-Safety.

3. Could the proposed activity create the possibility of an accident of a different type than those previously evaluated in the ABD? (Y) N N/A

As already discussed in the response to Screening Criterion No. 2 under 'Safety Function(s) of Systems Affected', the answer to this question is '**YES**'. However, the consequences of any such accident , as discussed in Appendix A, are bounded under the consequences of accidents presented in the BGRR-ASA, based upon a comparison of maximum projected release.

4. Could the proposed activity create the possibility of an equipment, system, or component malfunction of a different type than those previously evaluated in the ABD? (Y) N N/A

As already discussed in the response to Screening Criterion No. 2 under 'Safety Function(s) of Systems Affected', the answer to this question is '**YES**'. However, the consequences of any such malfunction , as discussed in Appendix A, are bounded under the consequences of accidents presented in the BGRR-ASA.

5. Does the proposed activity reduce the Margin-of-Safety as defined in the basis for any ABD? Y (N) N/A

In ERD-OPM-4.4 [Ref. 1], the procedure states "In the context of this procedure a Margin-of-Safety is reduced if the Safety Limit or Limiting Condition of Operation or Administrative Control as defined in the Authorization Basis Document(s) is violated". As this safety evaluation is based upon the guidance provided in the above referenced procedure, that definition of Margin-of-Safety compels the answer '**NO**'.

The proposed activity **DOES NOT** reduce the Margin-of-Safety as defined in the BGRR-ASA. The work is being reviewed under the USI process prior to authorization, and will not violate any of the Administrative Controls already contained in the BGRR-ASA, as long as the work is performed as described in the task specific Technical Work Documents and Job Safety Analyses [Refs. 9 - 14, and 18]

Authorization Basis Document(s) Changes

1. Is a change to the facility ABD(s) being made? (Y) N N/A

The BGRR-ASA refers to the performance of work outside the scope of the ASA as requiring the use of the USI process as defined in ERD-OPM-4.4 [Ref. 1]. The proposed activity covered here specifically falls under that classification (see ASA Table 1.4-1 – ASA Applicability Table, for CERCLA Removal Actions). The completed and approved USID/SE for the proposed activity should be considered as an addendum and amendment to the BGRR-ASA.

Therefore, it does constitute a change to the BGRR-ASA and requires the approval of the DOE Project Manager for the BGRR Decommissioning Project, prior to implementation. The answer to Question 1 under 'Authorization Basis Document(s) Changes' is '**YES**'.

SAFETY EVALUATION CONCLUSION

Based on the evaluation of the evidence cited above, the issue --

_____ Does NOT constitute an Unreviewed Safety Issue.

___V___ Does constitute an Unreviewed Safety Issue.

**** IF ANY OF THE ABOVE ARE <u>YES</u>, THEN A USI EXISTS. ****

3/14/01
BGRR Project Engineer Signature/ Date

3/14/01
BGRR Project ES&H Manager Signature/ Date

3/14/01
BGRR Project Manager Signature/ Date

3-14-01
BGRR Project QA Representative Signature/ Date

APPENDIX A

ABNORMAL OPERATIONS ASSESSMENT

APPENDIX A - ABNORMAL OPERATIONS ASSESSMENT

Method of Abnormal Operations Assessment

The abnormal operations assessment of the Above Ground Canal and Water Treatment House Removal was based on a methodical review of each initiating event and the severity, probability, and risk category of the corresponding hazards associated with the activity. Only one accident-initiating event is postulated to occur at one time. Guidance for the selection of appropriate failure modes to consider was taken from: NUREG/CR-0672, "Technology, Safety and Costs of Decommissioning a Reference Boiling Water Reactor Power Station" [Ref. 16]; Long Island Power Authority, Shoreham Nuclear Power Station - NRC Docket No. 50-322, "Updated Decommissioning Plan" [Ref. 17]; and BGRR-SE-99-04, "Removal of Above Ground Duct for BGRR-DP, as approved by DOE 06/08/00 [Ref. 15]. The main failure modes to be considered include; Crane Load Drop, Waste Container Drop, Contaminated Waste Bag Rupture/Fire, Oxyacetylene Explosion, Explosion of LPG Leaked from a Forklift, Vacuum Filter Bag Rupture, and Contamination Control Envelope Rupture. The ERD/BGRR Task Specific Job Safety Analyses (JSAs) for Canal and Water Treatment House removal Action [Refs. 11 & 12] and the associated Technical Work Documents for Canal and Water Treatment House removal Action [Refs. 13 & 14], specifically bar the practice of flame cutting contaminated equipment. Based on the physical characteristics of the materials to be removed (concrete, metal sheeting and ACM), Combustible Waste Fire was not a credible accident scenario. The potential use of explosives was not considered and so is outside the scope of this USID/SE. The risk-assessment tables which follow represent the determination of the extent of the hazards associated with the Above Ground Canal and Water Treatment House Removal, based on the current JSAs and Technical Work Documents.

BNL ES&H Standard 1.3.3, {https:sbms.bnl.gov/ld/ld08/ld08d081.htm}[Ref. 4] provides the methodology for examining the safety of facilities at the BNL. It has guidance for assessing the appropriate level of severity, probability, and risk. Table A.1-1 depicts the form used in this Safety Evaluation for Unreviewed Safety Issue Determination to perform the risk assessment. Tables A.1-2 through A.1-4 summarize the Risk Assessment Matrix found in Standard 1.3.3 and used here.

Table A.1-1

RISK ASSESSMENT FORMAT						
Severity	I ( ) Catastrophic	II ( ) Critical	III ( ) Marginal	IV ( ) Negligible		
Probability	A ( ) Frequent	B ( ) Probable	C ( ) Occasional	D ( ) Remote	E ( ) Extr Remote	F ( ) Impossible
Risk Category	1 ( ) High	2 ( ) Moderate	3 ( ) Low	4 ( ) Routine		

Table A.1-2 summarizes the potential consequences of hazards falling into the four severity classifications established in BNL ES&H Standard 1.3.3. Standard 1.3.3 considers the consequences for the following:

- Non-radiation release/exposure, on-site/off-site
- Radiation release/exposure, on-site/off-site
- Equipment loss
- Program downtime
- Program compromise
- Public-impact perception

Table A.1-2

HAZARD SEVERITY		
Category	**Descriptive Word**	**Potential Consequences**
I	Catastrophic	May cause death or system loss. > 100 rem Committed Effective Dose Equivalent (CEDE) on-site or > EPA Protective Action Guidelines off-site. {Eqpt. Loss>$1,000,000; Downtime >4 months}
II	Critical	May cause severe injury, severe occupational illness, or major system damage. >25 rem CEDE on-site or 10 mrem off-site. {Eqpt. Loss>$250,000; Downtime >3 weeks and <4 months}
III	Marginal	May cause minor injury, minor occupational illness, or minor system damage.> 5 rem annual limit on-site. {Eqpt. Loss>$50,000; Downtime >4 days and <3 weeks}
IV	Negligible	Will not result in injury, occupational illness, or system damage. > 3 rem admin annual limit or 1 rem admin quarterly limit. {Eqpt. Loss <$50,000; Downtime <4 days}

Table A.1-3 summarizes the probability categories established by BNL's ES&H Standard 1.3.3. They are based on the likelihood of the potential consequences occurring for a given hazard.

Table A.1-3

HAZARD PROBABILITY		
Category	**Descriptive Word**	**Potential Consequences**
A	Frequent	Likely to occur repeatedly during life cycle of system.
B	Probable	Likely to occur several times in life cycle of system.
C	Occasional	Likely to occur sometime in life cycle of system.
D	Remote	Not likely to occur in life cycle of system, but possible.
E	Extremely Remote	Probability of occurrence cannot be distinguished from zero.
F	Impossible	Physically inpossible to occur.

Table A.1-4 summarizes the risk categories established by BNL's ES&H Standard 1.3.3. Choosing a severity and a probability for a given hazard determines its risk category. Standard 1.3.3 establishes the documentation and minimum approval required for each risk category.

Table A.1-4

RISK CATEGORY						
Hazard Severity	**A Frequent**	**B Probable**	**C Occasional**	**D Remote**	**E Extremely Remote**	**F Impossible**
I Catastrophic	1. High	1. High	1. High	2. Moderate	3. Low	4. Routine
II Critical	1. High	1. High	2. Moderate	3. Low	3. Low	4. Routine
III Marginal	2. Moderate	2. Moderate	3. Low	3. Low	4. Routine	4. Routine
IV Negligible	4. Routine	4. Routine	4. Routine	4. Routine	4. Routine	4. Routine

Hazard mitigation takes the form of engineered features, administrative controls, operator training, or a combination of these. **Generally, the hazard's severity is not changed by mitigation, but its probability is reduced.**

Risk Assessment for the facility is given on the following pages where operator's error, equipment/system failure, an accident or natural phenomenon is the initiating event. Each event is analyzed on four tables: Hazard, Risk Assessment Before Mitigation, Hazard Mitigation, and Risk Assessment After Mitigation.

The Hazard table first identifies the initiating event and lists its possible consequences and its specific hazards. A list of potential initiators is also given.

The Hazard-Mitigation table lists the administrative controls, training, and engineered features that will mitigate the effects of the event. The Risk-Assessment tables contrast the risk involved due to an initiating event with and without mitigation.

Risk Assessment No. A001 covering Waste Container Drop

ACTIVITY: Above Ground Canal and Water Treatment House Removal **NUMBER:** A001
HAZARD: To On-site Personnel, Equipment, Environment

Event:	Waste Container Drop
Possible Consequences & Hazards:	Damage to facility structures / equipment Release of radioactive materials / radiation to the environment Exposure to radioactive materials through ingestion, inhalation, or dermal exposure Equipment, facility or personnel contamination Injury to worker Project delays / interruptions
Potential Initiators:	Natural phenomena, manufacturer defect, missile strike, operator error

Risk Assessment Prior to Mitigation						
Severity:	I ( ) Catastrophic	II ( ) Critical	III ( ) Marginal	IV (X) Negligible		
Probability:	A ( ) Frequent	B (X) Probable	C ( ) Occasional	D ( ) Remote	E ( ) Extr Remote	F ( ) Impossible
Risk Category:	1 ( ) High	2 ( ) Moderate	3 ( ) Low	4 (X) Routine		

Hazard Mitigation:	Limited radiological inventory at risk and available for release from Above Ground Canal and Water Treatment House Removal (<<Nuclear Hazard Category 3 Threshold), based on the survey and sampling analysis data collected to date. Additional limitation on fraction of entire inventory available for release due to waste container drop as a result of the strength of the Strong Tight Containers, the applied barrier fixative, physical forms and distribution of inventory materials, and the sequential nature of the Canal and Water Treatment Removal (interior clean-out followed by structure take-down). Use of approved Work Control Permit, Radiological Work Permit (including specific contamination mitigation measures), Task-specific Technical Work Documents, Task-specific Job Safety Analyses. Performance of work by trained and qualified personnel, familiar with the requirements of BNL ES&H Manual Stds; 1.3.6 - Work Planning and Control for Operations, 1.6.0 - Material Handling - Equipment & Procedures, 1.6.1 - Material Handling - Operator Training & Qualification Use of Pre-job briefings and Pre-Start Checklists.

Risk Assessment Following Mitigation						
Severity:	I ( ) Catastrophic	II ( ) Critical	III ( ) Marginal	IV (X) Negligible		
Probability:	A ( ) Frequent	B ( ) Probable	C (X) Occasional	D ( ) Remote	E ( ) ExtrRemote	F ( ) Impossible
Risk Category:	1 ( ) High	2 ( ) Moderate	3 ( ) Low	4 (X) Routine		

Description - Waste Container Drop

Hazard Probability (as defined in Table A.1-3)
The waste containers to be used during the Above Ground Canal and Water Treatment House Removal will be Sealand Containers, B-52, B-25 and/or B-12 boxes; with lids (strong tight containers). They will be moved only with appropriately load rated cranes, forklifts or front end loaders. Based upon collective experiences with waste container movements, both on-site and at commercial nuclear decommissioning sites; it is conservatively assumed that the unmitigated probability of a waste container drop is higher than that of a crane load drop (which was designated 'Occasional' in the BGRR-ASA). The next higher probability frequency class is **'PROBABLE'** (likely to occur several times in the life cycle of system).

Considering the mitigation factors listed in Risk Assessment No. A001, as well as the limited life cycle remaining (time required to perform Above Ground Canal and Water Treatment House Removal estimated at **90** days), the post-mitigation probability is reduced to **'OCCASIONAL'** (likely to occur sometime in the life-cycle of the system).

Hazard Severity (as defined by Table A.1-2)
Since the Canal and Water Treatment Houses were shutdown after all the BGRR fuel was removed from BNL site many years ago; there are no programmatic delays or repair costs associated with any damage to the Canal and Water Treatment Houses, caused by any Waste Container Drop. The Above Ground Canal and Water Treatment House Removal Working Area will be posted as a radiological control area with restrictions on access; so the potential for personnel injury or illness will be small. This is especially true considering the expertise and qualifications of the crane and/or fork-lift operator(s) and assistants.

Due to the sequential nature of the work (interior clean-out followed by above ground structure take-down) and the limited volume available within the waste containers, any waste container drop would be limited to only a small portion of the Above Ground Canal and Water Treatment House Removal inventory source term, here assumed not to exceed **25%** of the total. In Appendix B - Source Term Development, the following radiological inventory was developed for the Above Ground Canal and Water Treatment House Removal

Isotope	Inventory [Ci]	Cat 3 Threshold [Ci]	Cat 3 Threshold Fraction
H-3	9.18E-08	1.60E+04	5.74E-12
C-14	1.60E-08	4.20E+02	3.80E-11
Fe-55	5.44E-09	5.40E+03	1.01E-12
Co-60	2.17E-06	2.80E+02	7.74E-09
Ni-63	2.42E-07	5.40E+03	4.48E-11
Sr-90	8.47E-06	1.60E+01	5.29E-07
Y-90	8.47E-06	1.42E+03	5.96E-09
Tc-99	3.65E-09	1.70E+03	2.15E-12
I-129	1.20E-09	6.00E-02	2.00E-08
Cs-137	2.93E-05	6.00E+01	4.88E-07
Eu-152	1.47E-06	2.00E+02	7.34E-09
Eu-154	7.08E-07	2.00E+02	3.54E-09
Eu-155	5.14E-09	9.40E+02	5.46E-12
Ra-226	7.42E-07	1.20E+01	6.19E-08
Th-232	1.36E-08	1.00E-01	1.36E-07
U-233	1.04E-07	4.20E+00	2.48E-08
U-234	1.04E-07	4.20E+00	2.48E-08
U-235	9.77E-09	4.20E+00	2.33E-09
U-238	1.83E-07	4.20E+00	4.35E-08
Pu-238	3.59E-07	6.20E- 01	5.79E-07
Pu-239	1.09E-05	5.20E- 01	2.10E-05
Pu-240	1.09E-05	5.20E- 01	2.10E-05
Pu-241	3.14E-05	3.20E+01	9.81E-07
Am-241	5.18E-06	5.20E- 01	9.96E-06
			SUM= 5.48E-05

Based upon the guidance of DOE-STD-1027-92, Attachment 1 [Ref. 5], 25% of the inventory above corresponds to a maximal potential dose of less than **0.2 mrem** effective whole body; where projected dose is 10 rem for the release of 100% of the Hazard Category 3 threshold and calculated at 30 meters from point of release for one day of inhalation and direct exposure, while the ingestion pathway is determined over a longer period of time.

The potential consequences discussed here most closely correspond to the definition of Hazard Severity **NEGLIGIBLE** (per Table A.1-2, Hazard Severity).

Risk Category (as defined by Table A.1-4)

Both the pre-mitigation combination of Severity = **NEGLIGIBLE** with Probability = **PROBABLE**, and the post-mitigation combination of Severity = **NEGLIGIBLE** with Probability = **OCCASIONAL**, define the risk category as **ROUTINE** for the activities under this USID/SE.

Risk Assessment No: A002 covering Contaminated Waste Bag Rupture/Fire

ACTIVITY: Above Ground Canal and Water Treatment House Removal **NUMBER:** A002
HAZARD: To On-site Personnel, Equipment, Environment

Event:	Contaminated Waste Bag Rupture/Fire
Possible Consequences & Hazards:	Radiation exposure to on-site personnel. Release of radioactive materials / radiation to the building and/or environment. Exposure to radioactive materials through ingestion, inhalation, and/or dermal exposure. Contamination of building, equipment and/or environment Project delays.
Potential Initiators:	Natural phenomenon, operator's error, failure of equipment.

Risk Assessment Prior to Mitigation						
Severity	I ( ) Catastrophic	II ( ) Critical	III ( ) Marginal	IV (X) Negligible		
Probability	A ( ) Frequent	B (X) Probable	C ( ) Occasional	D ( ) Remote	E ( ) Extr Remote	F ( ) Impossible
Risk Category	1 ( ) High	2 ( ) Moderate	3 ( ) Low	4 (X) Routine		

Hazard Mitigation:	Limited radiological inventory at risk and available for release from Above Ground Canal and Water Treatment House Removal (<<Nuclear Hazard Category 3 Threshold), based on the survey and sampling analysis data collected to date. Additional limitation on fraction of entire inventory available as a result of the applied fixative, physical forms and distribution of inventory materials, capacity of contaminated waste storage bag and sequential nature of Canal and Water Treatment House Removal (interior clean-out followed by structural take-down). Limitations on use of combustible materials for the Above Ground Canal and Water Treatment House Removal and restrictions on storing combustible material near the job-site. Use of approved Work Control Permit, Radiological Work Permit (including specific contamination mitigation measures), Task-specific Technical Work Documents, and Task-specific Job Safety Analyses Performance of work by trained and qualified personnel, familiar with the requirements of BNL ES&H Manual Stds; 1.3.6 - Work Planning and Control for Operations, BNL Rad Con Manual Use of Pre-job briefings and Pre-Start Checklists. Coverage of work by trained and qualified Radiological Control Technicians. Assignment of a dedicated Waste Management Representative to project, providing expertise in the minimization and disposal of contaminated waste. Area protected against direct lightning strike by proximity of Reactor stack (preferred target due to height).

Risk Assessment Following Mitigation						
Severity:	I ( ) Catastrophic	II ( ) Critical	III ( ) Marginal	IV (X) Negligible		
Probability:	A ( ) Frequent	B ( ) Probable	C (X) Occasional	D ( ) Remote	E ( ) Extr Remote	F ( ) Impossible
Risk Category:	1 ( ) High	2 ( ) Moderate	3 ( ) Low	4 (X) Routine		

Description - Contaminated Waste Bag Rupture/Fire

Hazard Probability (as defined in Table A.1-3)
Table 11.3-3, "Summary of Maximum-Exposed Individual Radiation Doses from Postulated BWR Decommissioning Accidents" of NUREG/CR-0672 [Ref. 16], gives frequency of occurrence for some specific decommissioning related activity accidents with releases. Among the incidents listed are: Vacuum Filter Bag Rupture with frequency = Medium (with Medium defined as below 10^{-2} per year and above 10^{-5} per year, which corresponds to 'Occasional' from Table A.1-3); and Combustible Waste Fire with frequency = High (with High defined as above 10^{-2} per year, which corresponds to 'Probable' from Table A.1-3). Assuming the more conservative value as representative of the Contaminated Waste Bag Rupture/Fire, makes the unmitigated probability '**PROBABLE**' (likely to occur several times in the life cycle of the system).

Considering the mitigation factors listed in Risk Assessment No. A002, as well as the limited life cycle remaining (time required to perform Above Ground Canal and Water Treatment House Removal estimated at **90** days), the post-mitigation probability is reduced to '**OCCASIONAL**' (likely to occur sometime in the life-cycle of the system).

Hazard Severity (as defined by Table A.1-2)
Since the Canal and Water Treatment House were shutdown after all the BGRR fuel was removed from BNL site many years ago; there are no programmatic delays or repair costs associated with any damage to the Canal and Water Treatment House, caused by any Contaminated Waste Bag Rupture/Fire. The Above Ground Canal and Water Treatment House Working Area will be posted as a radiological control area with restrictions on access; so the potential for personnel injury or illness will be small. This is especially true considering the small size of the accident under consideration here.

Due to the limited volume available within a contaminated waste bag, any contaminated waste bag rupture/fire would be limited to only a small portion of one section of the Above Ground Duct inventory source term; assumed not to exceed 10% (as was already used in the approved BGRR-SE-99-04[Ref. 15]). In Appendix B - Source Term Development, the following radiological inventory was developed for the Above Ground Canal and Water Treatment House Removal

Isotope	Inventory [Ci]	Cat 3 Threshold [Ci]	Cat 3 Threshold Fraction
H-3	9.18E-08	1.60E+04	5.74E-12
C-14	1.60E-08	4.20E+02	3.80E-11
Fe-55	5.44E-09	5.40E+03	1.01E-12
Co-60	2.17E-06	2.80E+02	7.74E-09
Ni-63	2.42E-07	5.40E+03	4.48E-11
Sr-90	8.47E-06	1.60E+01	5.29E-07
Y-90	8.47E-06	1.42E+03	5.96E-09
Tc-99	3.65E-09	1.70E+03	2.15E-12
I-129	1.20E-09	6.00E-02	2.00E-08
Cs-137	2.93E-05	6.00E+01	4.88E-07
Eu-152	1.47E-06	2.00E+02	7.34E-09
Eu-154	7.08E-07	2.00E+02	3.54E-09
Eu-155	5.14E-09	9.40E+02	5.46E-12
Ra-226	7.42E-07	1.20E+01	6.19E-08
Th-232	1.36E-08	1.00E-01	1.36E-07
U-233	1.04E-07	4.20E+00	2.48E-08
U-234	1.04E-07	4.20E+00	2.48E-08
U-235	9.77E-09	4.20E+00	2.33E-09
U-238	1.83E-07	4.20E+00	4.35E-08
Pu-238	3.59E-07	6.20E- 01	5.79E-07
Pu-239	1.09E-05	5.20E- 01	2.10E-05
Pu-240	1.09E-05	5.20E- 01	2.10E-05
Pu-241	3.14E-05	3.20E+01	9.81E-07
Am-241	5.18E-06	5.20E- 01	9.96E-06
			SUM= 5.48E-05

Based upon the guidance of DOE-STD-1027-92, Attachment 1 [Ref. 5], 10% of the inventory above corresponds to a maximal potential dose of less than **0.1 mrem** effective whole body; where projected dose is 10 rem for the release of 100% of the Hazard Category 3 threshold and calculated at 30 meters from point of release for one day of inhalation and direct exposure, while the ingestion pathway is determined over a longer period of time.

The potential consequences discussed here most closely correspond to the definition of Hazard Severity '**NEGLIGIBLE**' (per Table A.1-2, Hazard Severity).

Risk Category (as defined by Table A.1-4)
Both the pre-mitigation combination of Severity = **NEGLIGIBLE** with Probability = **PROBABLE**, and the post-mitigation combination of Severity = **NEGLIGIBLE** with Probability = **OCCASIONAL**, define the risk category as **ROUTINE** for the activities under this USID/SE.

Risk Assessment No: A003 covering Explosion of LPG Leaked from a Forklift

ACTIVITY: Above Ground Canal and Water Treatment House Removal **NUMBER:** A003
HAZARD: To On-site Personnel, Equipment, Environment

Event:	Explosion of LPG Leaked from a Front End Loader (Forklift)
Possible Consequences & Hazards:	Fire / blast wave Contamination of area, equipment and/or environment Injury to worker Release of radioactive materials / radiation to the environment. Exposure to radioactive materials through ingestion, inhalation, and dermal exposure. Project delays / work plan interruptions
Potential Initiators:	Equipment failure, operator error, material handling vehicle failure / collision, missile strike

Risk Assessment Prior to Mitigation						
Severity:	I ( ) Catastrophic	II ( ) Critical	III ( ) Marginal	IV (X) Negligible		
Probability:	A ( ) Frequent	B ( ) Probable	C ( ) Occasional	D (X) Remote	E ( ) Extr Remote	F ( ) Impossible
Risk Category:	1 ( ) High	2 ( ) Moderate	3 ( ) Low	4 (X) Routine		

Hazard Mitigation:	Limited radiological inventory at risk and available for release from Above Ground Canal and Water Treatment House Removal (<<Nuclear Hazard Category 3 Threshold), based on the survey and sampling analysis data collected to date. Additional limitation on fraction of entire inventory available as a result of the applied fixative, physical forms and distribution of inventory materials, and the sequential nature of the Canal and Water Treatment House Removal (Interior clean-out followed by structural take-down). Limitations on use of combustible materials for the Above Ground Canal and Water Treatment House Removal and restrictions on the storage of combustible material near the job-site. Use of approved Work Control Permit, Radiological Work Permit, Task-specific Technical Work Documents, and Task-specific Job Safety Analyses. Performance of work by trained and qualified personnel, familiar with the requirements of BNL ES&H Manual Stds; 1.3.6 - Work Planning and Control for Operations, 1.6.0 - Material Handling - Equipment & Procedures, 1.6.1 - Material handling - Operator Training & Qualification . Use of Pre-job briefings and Pre-Start Checklists.

Risk Assessment Following Mitigation						
Severity:	I ( ) Catastrophic	II ( ) Critical	III ( ) Marginal	IV (X) Negligible		
Probability:	A ( ) Frequent	B ( ) Probable	C ( ) Occasional	D ( ) Remote	E (X) Extr Remote	F ( ) Impossible
Risk Category:	1 ( ) High	2 ( ) Moderate	3 ( ) Low	4 (X) Routine		

Description - Explosion of LPG Leaked from a Forklift

Hazard Probability (as defined in Table A.1-3)
Table 11.3-3, "Summary of Maximum-Exposed Individual Radiation Doses from Postulated BWR Decommissioning Accidents" of NUREG/CR-0672 [Ref. 16], gives the frequency of occurrence for some specific decommissioning related activity accidents with releases. Among the incidents listed is, Explosion of LPG Leaked from a Front-end Loader with frequency = Low (with Low defined as below 10^{-5} per year). Assuming comparable frequency here makes the unmitigated probability **'REMOTE'** (not likely to occur in life cycle of system, but possible).

Considering the mitigation factors listed in Risk Assessment No. A003, as well as the limited life cycle remaining (time required to perform Above Ground Duct Removal estimated at **90** days), the post-mitigation probability is reduced to **'EXTREMELY REMOTE'** (probability of occurrence cannot be distinguished from zero).

Hazard Severity (as defined by Table A.1-2)
Since the Canal and Water Treatment House were shutdown after all of the BGRR fuel was removed from BNL site many years ago; there are no programmatic delays or repair costs associated with any damage to the Above Ground Canal and Water Treatment House, caused by any Explosion of LPG Leaked from a Front-end Loader (beyond those associated with the Accident Investigation). The Above Ground Canal and Water Treatment House Working Area will be posted for radiological control with restrictions on access; so the potential for personnel injury or illness will be small. This is especially true considering the expertise and qualifications of the fork-lift operator(s) and assistants.

Due to the sequential nature of the work, the limited volume (hence inventory) available within any waste container being carried at the time and the limited amount of nearby dispersible material available to additionally go airborne, any release due to an explosion of LPG leaked from a front-end loader would be limited to only a portion of the Above Ground Canal and Water Treatment House inventory source term, assumed not to exceed 35% (25% + 10%). In Appendix B - Source Term Development, the following radiological inventory was developed for the Above Ground Canal and Water Treatment House Removal

Isotope	Inventory [Ci]	Cat 3 Threshold [Ci]	Cat 3 Threshold Fraction
H-3	9.18E-08	1.60E+04	5.74E-12
C-14	1.60E-08	4.20E+02	3.80E-11
Fe-55	5.44E-09	5.40E+03	1.01E-12
Co-60	2.17E-06	2.80E+02	7.74E-09
Ni-63	2.42E-07	5.40E+03	4.48E-11
Sr-90	8.47E-06	1.60E+01	5.29E-07
Y-90	8.47E-06	1.42E+03	5.96E-09
Tc-99	3.65E-09	1.70E+03	2.15E-12
I-129	1.20E-09	6.00E-02	2.00E-08
Cs-137	2.93E-05	6.00E+01	4.88E-07
Eu-152	1.47E-06	2.00E+02	7.34E-09
Eu-154	7.08E-07	2.00E+02	3.54E-09
Eu-155	5.14E-09	9.40E+02	5.46E-12
Ra-226	7.42E-07	1.20E+01	6.19E-08
Th-232	1.36E-08	1.00E-01	1.36E-07
U-233	1.04E-07	4.20E+00	2.48E-08
U-234	1.04E-07	4.20E+00	2.48E-08
U-235	9.77E-09	4.20E+00	2.33E-09
U-238	1.83E-07	4.20E+00	4.35E-08
Pu-238	3.59E-07	6.20E- 01	5.79E-07
Pu-239	1.09E-05	5.20E- 01	2.10E-05
Pu-240	1.09E-05	5.20E- 01	2.10E-05
Pu-241	3.14E-05	3.20E+01	9.81E-07
Am-241	5.18E-06	5.20E- 01	9.96E-06
			SUM= 5.48E-05

Based upon the guidance of DOE-STD-1027-92, Attachment 1 [Ref. 5], 35% of the inventory above corresponds to a maximal potential dose of less than **0.3 mrem** effective whole body; where projected dose is 10 rem for the release of 100% of the Hazard Category 3 threshold and calculated at 30 meters from point of release for one day of inhalation and direct exposure, while the ingestion pathway is determined over a longer period of time.

The potential consequences discussed here most closely correspond to the definition of Hazard Severity '**NEGLIGIBLE**' (per Table A.1-2, Hazard Severity).

Risk Category (as defined by Table A.1-4)
Both the pre-mitigation combination of Severity = **NEGLIGIBLE** with Probability = **REMOTE**, and the post-mitigation combination of Severity = **NEGLIGIBLE** with Probability = **EXTREMELY REMOTE**, define the risk category as **ROUTINE** for the activities under this USID/SE.

Risk Assessment No. A004 covering Oxyacetylene Explosion

ACTIVITY: Above Ground Canal and Water Treatment House Removal **NUMBER:** A004
HAZARD: To On-site Personnel, Equipment, Environment

Event:	Oxyacetylene Explosion
Possible Consequences & Hazards:	Fire / blast wave Contamination of area, equipment and/or environment Injury to worker Release of radioactive materials / radiation to the environment. Exposure to radioactive materials through ingestion, inhalation, and dermal exposure. Project delays / work plan interruptions
Potential Initiators:	Equipment failure, operator error, material handling vehicle failure / collision, missile strike

Risk Assessment Prior to Mitigation

Severity:	I ( ) Catastrophic	II ( ) Critical	III ( ) Marginal	IV (X) Negligible		
Probability:	A ( ) Frequent	B ( ) Probable	C (X) Occasional	D ( ) Remote	E ( ) Extr Remote	F ( ) Impossible
Risk Category:	1 ( ) High	2 ( ) Moderate	3 ( ) Low	4 (X) Routine		

Hazard Mitigation:	Limited radiological inventory at risk and available for release from Above Ground Canal and Water Treatment House Removal (<<Nuclear Hazard Category 3 Threshold), based on the survey and sampling analysis data collected to date. Additional limitation on fraction of entire inventory available as a result of the applied fixative, physical forms and distribution of inventory materials, and the sequential nature of the Canal and Water Treatment House removal (interior clean-out followed by structural take-down). Limitations on use of oxyacetylene for the Above Ground Canal and Water Treatment House Removal Activities and restrictions on the storage of oxyacetylene near the job-site. Use of approved Work Control Permit, Cutting and Burning Permit, Radiological Work Permit, Task-specific Technical Work Documents, and Task-specific Job Safety Analyses. Performance of work by trained and qualified personnel, familiar with the requirements of BNL ES&H Manual Stds; 1.3.6 - Work Planning and Control for Operations, 4.3.0 - Cutting and Welding . Use of Pre-job briefings and Pre-Start Checklists.

Risk Assessment Following Mitigation

Severity:	I ( ) Catastrophic	II ( ) Critical	III ( ) Marginal	IV (X) Negligible		
Probability:	A ( ) Frequent	B ( ) Probable	C ( ) Occasional	D (X) Remote	E ( ) Extr Remote	F ( ) Impossible
Risk Category:	1 ( ) High	2 ( ) Moderate	3 ( ) Low	4 (X) Routine		

Description - Oxyacetylene Explosion

Hazard Probability (as defined in Table A.1-3)
Table 11.3-3, "Summary of Maximum-Exposed Individual Radiation Doses from Postulated BWR Decommissioning Accidents" of NUREG/CR-0672 [Ref. 16], gives the frequency of occurrence for some specific decommissioning related activity accidents with releases. Among the incidents listed is, Oxyacetylene Explosion with frequency = Medium (with Medium defined as below 10^{-2} but above 10^{-5} per year). Assuming comparable frequency here makes the unmitigated probability '**OCCASIONAL**' (likely to occur sometime in life cycle of system).

Considering the mitigation factors listed in Risk Assessment No. A004, as well as the limited life cycle remaining (time required to perform Above Ground Canal and Water Treatment House Removal estimated at **90** days), the post-mitigation probability is reduced to '**REMOTE**' (not likely to occur in life cycle of system, but possible).

Hazard Severity (as defined by Table A.1-2)
Since the Above Ground Canal and Water Treatment House were shutdown after all of the BGRR fuel was removed from BNL site many years ago; there are no programmatic delays or repair costs associated with any damage to the Above Ground Canal and Water Treatment House, caused by any Oxyacetylene Explosion (beyond that associated with the Accident Investigation). The Above Ground Canal and Water Treatment House Working Area will be posted for radiological control with restrictions on access; so the potential for personnel injury or illness will be small. This is especially true considering the expertise and qualifications of the cutting torch operator(s) and assistants.

Due to the sequential nature of the work, and limited volume (hence inventory) available nearby while torch-cutting only radiologically clean portions of Canal and Water Treatment House for size reduction to facilitate off-site transfer, any release due to an oxyacetylene explosion would be limited to only a portion of the Above Ground Canal and Water Treatment House inventory source term, assumed not to exceed 10% of the total inventory (typical per the approved BGRR-SE-99-04 [Ref. 15]). In Appendix B - Source Term Development, the following radiological inventory was developed for the Above Ground Canal and Water Treatment House Removal

Isotope	Inventory [Ci]	Cat 3 Threshold [Ci]	Cat 3 Threshold Fraction
H-3	9.18E-08	1.60E+04	5.74E-12
C-14	1.60E-08	4.20E+02	3.80E-11
Fe-55	5.44E-09	5.40E+03	1.01E-12
Co-60	2.17E-06	2.80E+02	7.74E-09
Ni-63	2.42E-07	5.40E+03	4.48E-11
Sr-90	8.47E-06	1.60E+01	5.29E-07
Y-90	8.47E-06	1.42E+03	5.96E-09
Tc-99	3.65E-09	1.70E+03	2.15E-12
I-129	1.20E-09	6.00E-02	2.00E-08
Cs-137	2.93E-05	6.00E+01	4.88E-07
Eu-152	1.47E-06	2.00E+02	7.34E-09
Eu-154	7.08E-07	2.00E+02	3.54E-09
Eu-155	5.14E-09	9.40E+02	5.46E-12
Ra-226	7.42E-07	1.20E+01	6.19E-08
Th-232	1.36E-08	1.00E-01	1.36E-07
U-233	1.04E-07	4.20E+00	2.48E-08
U-234	1.04E-07	4.20E+00	2.48E-08
U-235	9.77E-09	4.20E+00	2.33E-09
U-238	1.83E-07	4.20E+00	4.35E-08
Pu-238	3.59E-07	6.20E- 01	5.79E-07
Pu-239	1.09E-05	5.20E- 01	2.10E-05
Pu-240	1.09E-05	5.20E- 01	2.10E-05
Pu-241	3.14E-05	3.20E+01	9.81E-07
Am-241	5.18E-06	5.20E- 01	9.96E-06
			SUM= 5.48E-05

Based upon the guidance of DOE-STD-1027-92, Attachment 1 [Ref. 5], 10% of the inventory above corresponds to a maximal potential dose of less than **0.1 mrem** effective whole body; where projected dose is 10 rem for the release of 100% of the Hazard Category 3 threshold and calculated at 30 meters from point of release for one day of inhalation and direct exposure, while the ingestion pathway is determined over a longer period of time.

The potential consequences discussed here most closely correspond to the definition of Hazard Severity '**NEGLIGIBLE**' (per Table A.1-2, Hazard Severity).

Risk Category (as defined by Table A.1-4)
Both the pre-mitigation combination of Severity = **NEGLIGIBLE** with Probability = **OCCASIONAL**, and the post-mitigation combination of Severity = **NEGLIGIBLE** with Probability = **REMOTE**, define the risk category as **ROUTINE** for the activities under this USID/SE.

Risk Assessment No. A005 covering Crane Load Drop

ACTIVITY: Above Ground Canal and Water Treatment House Removal **NUMBER:** A005
HAZARD: To On-site Personnel, Equipment, Environment

Event:	Crane Load Drop
Possible Consequences & Hazards:	Damage to structures / equipment Injury to worker Release of radioactive materials / radiation to the environment. Exposure to radioactive materials through ingestion, inhalation, and/or dermal exposure. Contamination of work area or equipment Project delays, work plan interruptions
Potential Initiators:	Equipment failure, operator's error, manufacturer defect, missile strike, collision

Risk Assessment Prior to Mitigation

Severity:	I ( ) Catastrophic	II ( ) Critical	III ( ) Marginal	IV (X) Negligible		
Probability:	A ( ) Frequent	B ( ) Probable	C (X) Occasional	D ( ) Remote	E ( ) Extr Remote	F ( ) Impossible
Risk Category:	1 ( ) High	2 ( ) Moderate	3 ( ) Low	4 (X) Routine		

Hazard Mitigation:	Limited radiological inventory at risk and available for release from Above Ground Canal and Water Treatment House Removal (<<Nuclear Hazard Category 3 Threshold), based on the survey and sampling analysis data collected to date. Additional limitation on fraction of entire inventory available as a result of the applied fixative, physical forms and distribution of inventory materials, and the sequential nature of the Canal and Water Treatment House removal work (interior clean-out followed by structural take-down). Use of approved Work Control Permit, Radiological Work Permit, Task-specific Technical Work Documents, and Task-specific Job Safety Analyses. Use of Pre-job briefings and Pre-start checklists. Performance of work by trained and qualified personnel, familiar with the requirements of BNL ES&H Manual Stds; 1.3.6 - Work Planning and Control for Operations, 1.6.0 - Material Handling - Equipment & Procedures, 1.6.1 - Material handling - Operator Training & Qualification. Regular inspection and maintenance of cranes.

Risk Assessment Following Mitigation

Severity:	I ( ) Catastrophic	II ( ) Critical	III ( ) Marginal	IV (X) Negligible		
Probability:	A ( ) Frequent	B ( ) Probable	C ( ) Occasional	D (X) Remote	E ( ) Extr Remote	F ( ) Impossible
Risk Category:	1 ( ) High	2 ( ) Moderate	3 ( ) Low	4 (X) Routine		

Description - Crane Load Drop

Hazard Probability (as defined in Table A.1-3)
The largest crane to be used for the Above Ground Canal and Water Treatment House Removal will be the site provided 75-Ton Cherry-Picker (wheel mounted crane with telescoping boom). The heaviest lift(s) to be made will be the removal of the concrete roof blocks, interior building crane structure, and some shielding walls. The crane will be inspected for safety prior to use by Plant Engineering Division, with continuing inspection and maintenance by same. As in the Crane Load Drop accident discussed in the BGRR-ASA Risk Assessment No. 006; the crane will only be operated by dedicated, trained and qualified crane-operators provided by Plant Engineering or the Sub-contractor. It was conservatively assumed in the BGRR-ASA and again here that the unmitigated probability of a Crane Load Drop was **'OCCASIONAL'** (likely to occur sometime in the life-cycle of the system).

Considering the mitigation factors listed in Risk Assessment No. A005, as well as the limited life cycle remaining (time required to perform Above Ground Canal and Water Treatment House Removal Activities estimated at **90** days), the post-mitigation probability is reduced to **'REMOTE'** (not likely to occur in life-cycle of the system but possible).

Hazard Severity (as defined by Table A.1-2)
Since the Above Ground Canal and Water Treatment House was shutdown after all of the BGRR fuel was removed from BNL site many years ago, there are no programmatic delays or repair costs associated with any damage to the Above Ground Canal and Water Treatment House, caused by any Crane Load Drop (beyond that associated with the Accident Investigation). The Above Ground Canal and Water Treatment House Working Area will be posted for radiological control with restrictions on access; so the potential for personnel injury or illness will be small. This is especially true considering the expertise and qualifications of the crane operator(s) and assistants.

Any crane load drop would be limited to only a portion of the Above Ground Canal and Water Treatment House inventory source term (only one load can fall in a crane load drop). For the sake of conservatism, the entire Canal and Water Treatment House source term will be assumed as releasable as a result of the event. This assumes the load being dropped lands on the rest of the structure being worked on and calls its collapse and resulting in the release of the entire inventory. In Appendix B - Source Term Development, the following radiological inventory was developed for the Above Ground Canal and Water Treatment House Removal

Isotope	Inventory [Ci]	Cat 3 Threshold [Ci]	Cat 3 Threshold Fraction
H-3	9.18E-08	1.60E+04	5.74E-12
C-14	1.60E-08	4.20E+02	3.80E-11
Fe-55	5.44E-09	5.40E+03	1.01E-12
Co-60	2.17E-06	2.80E+02	7.74E-09
Ni-63	2.42E-07	5.40E+03	4.48E-11
Sr-90	8.47E-06	1.60E+01	5.29E-07
Y-90	8.47E-06	1.42E+03	5.96E-09
Tc-99	3.65E-09	1.70E+03	2.15E-12
I-129	1.20E-09	6.00E-02	2.00E-08
Cs-137	2.93E-05	6.00E+01	4.88E-07
Eu-152	1.47E-06	2.00E+02	7.34E-09
Eu-154	7.08E-07	2.00E+02	3.54E-09
Eu-155	5.14E-09	9.40E+02	5.46E-12
Ra-226	7.42E-07	1.20E+01	6.19E-08
Th-232	1.36E-08	1.00E-01	1.36E-07
U-233	1.04E-07	4.20E+00	2.48E-08
U-234	1.04E-07	4.20E+00	2.48E-08
U-235	9.77E-09	4.20E+00	2.33E-09
U-238	1.83E-07	4.20E+00	4.35E-08
Pu-238	3.59E-07	6.20E- 01	5.79E-07
Pu-239	1.09E-05	5.20E- 01	2.10E-05
Pu-240	1.09E-05	5.20E- 01	2.10E-05
Pu-241	3.14E-05	3.20E+01	9.81E-07
Am-241	5.18E-06	5.20E- 01	9.96E-06
			SUM= 5.48E-05

Based upon the guidance of DOE-STD-1027-92, Attachment 1[Ref. 5], a release of the entire inventory corresponds to a maximal potential dose of less than **1.0 mrem** effective whole body; where projected dose is 10 rem for the release of 100% of the Hazard Category 3 threshold and calculated at 30 meters from point of release for one day of inhalation and direct exposure, while the ingestion pathway is determined over a longer period of time.

The potential consequences discussed here most closely correspond to the definition of Hazard Severity **NEGLIGIBLE** (per Table A.1-2, Hazard Severity).

Risk Category (as defined by Table A.1-4)
Both the pre-mitigation combination of Severity = **NEGLIGIBLE** with Probability = **OCCASIONAL**, and the post-mitigation combination of Severity = **NEGLIGIBLE** with Probability = **REMOTE**, define the risk category as **ROUTINE** for the activities under this USID/SE.

Risk Assessment No. A006 covering Vacuum Filter Bag Rupture

ACTIVITY: Above Ground Canal and Water Treatment House Removal **NUMBER:** A006
HAZARD: To On-site Personnel, Equipment, Environment

Event:	Vacuum Filter Bag Rupture
Possible Consequences & Hazards:	Release of radioactive materials / radiation to the environment. Exposure to radioactive materials through ingestion, inhalation, and/or dermal exposure. Contamination of work area or equipment Project delays, work plan interruptions
Potential Initiators:	Equipment failure, operator's error, manufacturer defect, missile strike, collision

Risk Assessment Prior to Mitigation

Severity:	I ( ) Catastrophic	II ( ) Critical	III ( ) Marginal	IV (X) Negligible		
Probability:	A ( ) Frequent	B ( ) Probable	C (X) Occasional	D ( ) Remote	E ( ) Extr Remote	F ( ) Impossible
Risk Category:	1 ( ) High	2 ( ) Moderate	3 ( ) Low	4 (X) Routine		

Hazard Mitigation:	Limited radiological inventory at risk and available for release from Above Ground Canal and Water Treatment House Removal (<<Nuclear Hazard Category 3 Threshold), based on the survey and sampling analysis data collected to date. Additional limitation on fraction of entire inventory available as a result of the applied fixative, physical forms and distribution of inventory materials, and the sequential nature of the Canal and Water Treatment House removal (interior clean-out followed by structural take-down). Limitations on the capacity of vacuum filter bags for the Above Ground Canal and Water Treatment House Removal Activities with routine physical inspection of and radiological measurements on the vacuum bags when used. Use of approved Work Control Permit, Cutting and Burning Permit, Radiological Work Permit, Task-specific Technical Work Documents, and Task-specific Job Safety Analyses. Performance of work by trained and qualified personnel, familiar with the requirements of BNL ES&H Manual Stds; 1.3.6 - Work Planning and Control for Operations. Use of Pre-job briefings and Pre-Start Checklists.

Risk Assessment Following Mitigation

Severity:	I ( ) Catastrophic	II ( ) Critical	III ( ) Marginal	IV (X) Negligible		
Probability:	A ( ) Frequent	B ( ) Probable	C ( ) Occasional	D (X) Remote	E ( ) Extr Remote	F ( ) Impossible
Risk Category:	1 ( ) High	2 ( ) Moderate	3 ( ) Low	4 (X) Routine		

Description - Vacuum Filter Bag Rupture

Hazard Probability (as defined in Table A.1-3)
Table 11.3-3, "Summary of Maximum-Exposed Individual Radiation Doses from Postulated BWR Decommissioning Accidents" of NUREG/CR-0672 [Ref. 16], gives the frequency of occurrence for some specific decommissioning related activity accidents with releases. Among the incidents listed is, Vacuum Filter Bag Rupture with frequency = Medium (with Medium defined as below 10^{-2} but above 10^{-5} per year). Assuming comparable frequency here makes the unmitigated probability '**OCCASIONAL**' (likely to occur sometime in life cycle of system).

Considering the mitigation factors listed in Risk Assessment No. A006, as well as the limited life cycle remaining (time required to perform Above Ground Canal and Water Treatment House Removal estimated at **90** days), the post-mitigation probability is reduced to '**REMOTE**' (not likely to occur in life cycle of system, but possible).

Hazard Severity (as defined by Table A.1-2)
Since the Above Ground Canal and Water Treatment House were shutdown after all of the BGRR fuel was removed from BNL site many years ago; there are no programmatic delays or repair costs associated with any damage to the Above Ground Canal and Water Treatment House, caused by any Vacuum Filter Bag Rupture. The Above Ground Canal and Water Treatment House Working Area will be posted for radiological control with restrictions on access; so the potential for personnel injury or illness will be small. This is especially true considering the expertise and qualifications of the personnel performing the work.

Due to the sequential nature of the work, the limited volume (hence inventory) available within the vacuum filter bag and the administrative limits on the exposure level issuing from it (prompting the changing out of the vacuum filter bag); any release due to a vacuum filter bag rupture would be limited to only a small fraction of the Above Ground Canal and Water Treatment House inventory source term, assumed not to exceed 5% of the total (typical per NUREG/CR-0672 [Ref. 16]). In Appendix B - Source Term Development, the following radiological inventory was developed for the Above Ground Canal and Water Treatment House Removal

Isotope	Inventory [Ci]	Cat 3 Threshold [Ci]	Cat 3 Threshold Fraction
H-3	9.18E-08	1.60E+04	5.74E-12
C-14	1.60E-08	4.20E+02	3.80E-11
Fe-55	5.44E-09	5.40E+03	1.01E-12
Co-60	2.17E-06	2.80E+02	7.74E-09
Ni-63	2.42E-07	5.40E+03	4.48E-11
Sr-90	8.47E-06	1.60E+01	5.29E-07
Y-90	8.47E-06	1.42E+03	5.96E-09
Tc-99	3.65E-09	1.70E+03	2.15E-12
I-129	1.20E-09	6.00E-02	2.00E-08
Cs-137	2.93E-05	6.00E+01	4.88E-07
Eu-152	1.47E-06	2.00E+02	7.34E-09
Eu-154	7.08E-07	2.00E+02	3.54E-09
Eu-155	5.14E-09	9.40E+02	5.46E-12
Ra-226	7.42E-07	1.20E+01	6.19E-08
Th-232	1.36E-08	1.00E-01	1.36E-07
U-233	1.04E-07	4.20E+00	2.48E-08
U-234	1.04E-07	4.20E+00	2.48E-08
U-235	9.77E-09	4.20E+00	2.33E-09
U-238	1.83E-07	4.20E+00	4.35E-08
Pu-238	3.59E-07	6.20E- 01	5.79E-07
Pu-239	1.09E-05	5.20E- 01	2.10E-05
Pu-240	1.09E-05	5.20E- 01	2.10E-05
Pu-241	3.14E-05	3.20E+01	9.81E-07
Am-241	5.18E-06	5.20E- 01	9.96E-06
			SUM= 5.48E-05

Based upon the guidance of DOE-STD-1027-92, Attachment 1 [Ref. 5], 5% of the inventory above corresponds to a maximal potential dose of less than **0.1 mrem** effective whole body; where projected dose is 10 rem for the release of 100% of the Hazard Category 3 threshold and calculated at 30 meters from point of release for one day of inhalation and direct exposure, while the ingestion pathway is determined over a longer period of time.

The potential consequences discussed here most closely correspond to the definition of Hazard Severity '**NEGLIGIBLE**' (per Table A.1-2, Hazard Severity).

Risk Category (as defined by Table A.1-4)
Both the pre-mitigation combination of Severity = **NEGLIGIBLE** with Probability = **OCCASIONAL**, and the post-mitigation combination of Severity = **NEGLIGIBLE** with Probability = **REMOTE**, define the risk category as **ROUTINE** for the activities under this USID/SE.

Risk Assessment No. A007 covering Contamination Control Envelope Rupture

ACTIVITY: Above Ground Canal and Water Treatment House Removal **NUMBER:** A007
HAZARD: To On-site Personnel, Equipment, Environment

Event:	Contamination Control Envelope Rupture
Possible Consequences & Hazards:	Release of radioactive materials / radiation to the environment. Exposure to radioactive materials through ingestion, inhalation, and/or dermal exposure. Contamination of work area or equipment Project delays, work plan interruptions
Potential Initiators:	Equipment failure, operator's error, manufacturer defect, missile strike, collision

Risk Assessment Prior to Mitigation

Severity:	I ( ) Catastrophic	II ( ) Critical	III ( ) Marginal	IV (X) Negligible		
Probability:	A ( ) Frequent	B (X) Probable	C ( ) Occasional	D ( ) Remote	E ( ) Extr Remote	F ( ) Impossible
Risk Category:	1 ( ) High	2 ( ) Moderate	3 ( ) Low	4 (X) Routine		

Hazard Mitigation:	Limited radiological inventory at risk and available for release from Above Ground Canal and Water Treatment House Removal (<<Nuclear Hazard Category 3 Threshold), based on the survey and sampling analysis data collected to date. Additional limitation on fraction of entire inventory available as a result of the applied fixative, physical forms and distribution of inventory materials, and the sequential nature of the Canal and Water Treatment House removal (interior clean-out followed by structural take-down). Administrative Controls on the allowable amount of radioactivity within the Contamination Control Envelope, as measured by background dose rate. Use of approved Work Control Permit, Cutting and Burning Permit, Radiological Work Permit, Task-specific Technical Work Documents, and Task-specific Job Safety Analyses. Performance of work by trained and qualified personnel, familiar with the requirements of BNL ES&H Manual Stds; 1.3.6 - Work Planning and Control for Operations. Use of Pre-job briefings and Pre-Start Checklists.

Risk Assessment Following Mitigation

Severity:	I ( ) Catastrophic	II ( ) Critical	III ( ) Marginal	IV (X) Negligible		
Probability:	A ( ) Frequent	B ( ) Probable	C (X) Occasional	D ( ) Remote	E ( ) Extr Remote	F ( ) Impossible
Risk Category:	1 ( ) High	2 ( ) Moderate	3 ( ) Low	4 (X) Routine		

Description - Contamination Control Envelope Rupture

Hazard Probability (as defined in Table A.1-3)
Table 11.3-3, "Summary of Maximum-Exposed Individual Radiation Doses from Postulated BWR Decommissioning Accidents" of NUREG/CR-0672 [Ref. 16], gives the frequency of occurrence for some specific decommissioning related activity accidents with releases. Among the incidents listed is, Contamination Control Envelope Rupture with frequency = High (with High defined as above 10^{-2} per year). Assuming comparable frequency here makes the unmitigated probability '**PROBABLE**' (likely to occur several times in life cycle of system).

Considering the mitigation factors listed in Risk Assessment No. A007, as well as the limited life cycle remaining (time required to perform Above Ground Canal and Water Treatment House Removal estimated at **90** days), the post-mitigation probability is reduced to '**OCCASIONAL**' (likely to occur sometime in life cycle of system).

Hazard Severity (as defined by Table A.1-2)
Since the Above Ground Canal and Water Treatment House were shutdown after all of the BGRR fuel was removed from BNL site many years ago; there are no programmatic delays or repair costs associated with any damage to the Above Ground Canal and Water Treatment House, caused by any Contamination Control Envelope Rupture. The Above Ground Canal and Water Treatment House Working Area will be posted for radiological control with restrictions on access; so the potential for personnel injury or illness will be small. This is especially true considering the expertise and qualifications of the personnel performing the work.

Due to the sequential nature of the work, the limited volume (hence inventory) in communication with the Contamination Control Envelope, and administrative controls on the buildup of background levels of activity or contamination within the contamination control envelope; any release due to a contamination control envelope bag rupture would be limited to only a small fraction of the Above Ground Canal and Water Treatment House inventory source term, assumed not to exceed 20% of entire inventory (typical per NUREG/CR-0672 [Ref. 16]). In Appendix B - Source Term Development, the following radiological inventory was developed for the Above Ground Canal and Water Treatment House Removal

Isotope	Inventory [Ci]	Cat 3 Threshold [Ci]	Cat 3 Threshold Fraction
H-3	9.18E-08	1.60E+04	5.74E-12
C-14	1.60E-08	4.20E+02	3.80E-11
Fe-55	5.44E-09	5.40E+03	1.01E-12
Co-60	2.17E-06	2.80E+02	7.74E-09
Ni-63	2.42E-07	5.40E+03	4.48E-11
Sr-90	8.47E-06	1.60E+01	5.29E-07
Y-90	8.47E-06	1.42E+03	5.96E-09
Tc-99	3.65E-09	1.70E+03	2.15E-12
I-129	1.20E-09	6.00E-02	2.00E-08
Cs-137	2.93E-05	6.00E+01	4.88E-07
Eu-152	1.47E-06	2.00E+02	7.34E-09
Eu-154	7.08E-07	2.00E+02	3.54E-09
Eu-155	5.14E-09	9.40E+02	5.46E-12
Ra-226	7.42E-07	1.20E+01	6.19E-08
Th-232	1.36E-08	1.00E-01	1.36E-07
U-233	1.04E-07	4.20E+00	2.48E-08
U-234	1.04E-07	4.20E+00	2.48E-08
U-235	9.77E-09	4.20E+00	2.33E-09
U-238	1.83E-07	4.20E+00	4.35E-08
Pu-238	3.59E-07	6.20E- 01	5.79E-07
Pu-239	1.09E-05	5.20E- 01	2.10E-05
Pu-240	1.09E-05	5.20E- 01	2.10E-05
Pu-241	3.14E-05	3.20E+01	9.81E-07
Am-241	5.18E-06	5.20E- 01	9.96E-06
			SUM= 5.48E-05

Based upon the guidance of DOE-STD-1027-92, Attachment 1 [Ref. 5], 20% of this Cat 3 threshold fractional sum (7.01E-05) corresponds to a maximal potential dose of less than **0.2 mrem** effective whole body; where projected dose is 10 rem for the release of 100% of the Hazard Category 3 threshold and calculated at 30 meters from point of release for one day of inhalation and direct exposure, while the ingestion pathway is determined over a longer period of time.

The potential consequences discussed here most closely correspond to the definition of Hazard Severity '**NEGLIGIBLE**' (per Table A.1-2, Hazard Severity).

Risk Category (as defined by Table A.1-4)
Both the pre-mitigation combination of Severity = **NEGLIGIBLE** with Probability = **PROBABLE**, and the post-mitigation combination of Severity = **NEGLIGIBLE** with Probability = **OCCASIONAL**, define the risk category as **ROUTINE** for the activities under this USID/SE.

Risk Assessment Summary

This section and Tables A.1-5 and A.1-6 summarize the Risk Assessment for the Above Ground Canal and Water Treatment House Removal given above. Seven types of events are addressed under the Risk Assessment for the Above Ground Canal and Water Treatment House Removal in this Safety Evaluation for Unreviewed Safety Issue Determination for the activities covered:

- 001 Waste Container Drop
- 002 Contaminated Waste Bag Rupture/Fire
- 003 Explosion of LPG Leaked from a Forklift
- 004 Oxyacetylene Explosion
- 005 Crane Load Drop
- 006 Vacuum Filter Bag Rupture
- 007 Contamination Control Envelope Rupture

These are discussed in detail as part of the Abnormal Operations Assessment above. These failure modes represent the known or anticipated types possible for the Above Ground Canal and Water Treatment House Removal. The specific examples represent the most severe combination of consequences and frequency deemed credible. Thus, each separate Risk Assessment Table represents an individual envelope encompassing a variety of similar or related events whose severity and probability fall within the bounds of the specific event. Each such event includes all lesser similar ones with lower overall risk (a product of the functions of severity or consequence, and probability or frequency). This combination of assorted types of events caused by any of a variety of potential initiators defines a bounding spectrum of accidents. The spectrum can cover or subtend numerous specific but unnamed incidents under their overlapping umbrellas, so long as the specific event does not exceed the envelope for the type it represents.

As summarized in the tables below, with the administrative controls and mitigating factors considered, only **ROUTINE** risks are associated with the Above Ground Canal and Water Treatment House Removal scope described in this USID/SE.

Table A.1-5

PRE-MITIGATION RISK CATEGORIES				
No.	**Event**	**Hazard Severity (1)**	**Hazard Frequency (1)**	**Risk (2)**
A001	Waste Container Drop	Negligible	Probable	Routine
A002	Contaminated Waste Bag Rupure/Fire	Negligible	Probable	Routine
A003	Explosion of LPG Leaked from a Forklift	Negligible	Remote	Routine
A004	Oxyacetylene Explosion	Negligible	Occasional	Routine
A005	Crane Load Drop	Negligible	Occasional	Routine
A006	Vacuum Filter Bag Rupture	Negligible	Occasional	Routine
A007	Contamination Control Envelope Rupture	Negligible	Probable	Routine

1. Severity and frequency are discussed in Section A.1-2.
2. Risk (based on severity and frequency) is defined in Table A.1-4.

Table A.1-6

POST-MITIGATION RISK CATEGORIES				
No.	**Event**	**Hazard Severity (1)**	**Hazard Frequency (1)**	**Risk (2)**
A001	Waste Container Drop	Negligible	Occasional	Routine
A002	Contaminated Waste Bag Rupture/Fire	Negligible	Occasional	Routine
A003	Explosion of LPG Leaked from a Forklift	Negligible	Extremely Remote	Routine
A004	Oxyacetylene Explosion	Negligible	Remote	Routine
A005	Crane Load Drop	Negligible	Remote	Routine
A006	Vacuum Filter Bag Rupture	Negligible	Remote	Routine
A007	Contamination Control Envelope Rupture	Negligible	Occasional	Routine

1. Severity and frequency are discussed in Section A.1-2.
2. Risk (based on severity and frequency) is defined in Table A.1-4.

The Risk Assessment concludes that all events with or without mitigation present only a Routine Risk. This analysis did not postulate any accidents or natural phenomena that could result in a credible release mechanism for any radiological inventories other than those discussed above and in Appendix B - Source Term Development. Therefore, it is the conclusion of this analysis that the Above Ground Canal and Water Treatment House Removal does not represent a significant risk to the public, the environment or the workers on the BGRR Decommissioning Project.

APPENDIX B

SOURCE TERM DEVELOPMENT

BGRR-SE-01-01 Source Term Inventory

as of 03/14/01

RADIO-NUCLIDE	(1) HALF LIFE [Yr]	(2) TOTAL ACTIVITY [Ci]	(3) HAZ.CAT. 3 THRESHOLD [Ci]	(4) HAZ.CAT. 3 FRACTION	(1) HAZ.CAT. 2 THRESHOLD [Ci]	(5) HAZ.CAT. 2 FRACTION
003H	1.23E+01	9.18E-08	1.60E+04	5.74E-12	2.90E+05	3.16E-13
014C	5.73E+03	1.60E-08	4.20E+02	3.80E-11	1.38E+06	1.16E-14
055Fe	2.70E+00	5.44E-09	5.40E+03	1.01E-12	1.11E+07	4.91E-16
060Co	5.27E+00	2.17E-06	2.80E+02	7.74E-09	1.92E+05	1.13E-11
063Ni	1.00E+02	2.42E-07	5.40E+03	4.48E-11	4.54E+06	5.33E-14
090Sr	2.88E+01	8.47E-06	1.60E+01	5.29E-07	2.21E+04	3.84E-10
090Y	7.31E-03	8.47E-06	1.42E+03	5.96E-09	4.30E+05	1.97E-11
099Tc	2.14E+05	3.65E-09	1.70E+03	2.15E-12	3.88E+06	9.40E-16
129I	1.57E+07	1.20E-09	6.00E-02	2.00E-08	4.30E+05	2.79E-15
137Cs	3.02E+01	2.93E-05	6.00E+01	4.88E-07	8.65E+04	3.39E-10
152Eu	1.30E+01	1.47E-06	2.00E+02	7.34E-09	1.36E+05	1.08E-11
154Eu	8.50E+00	7.08E-07	2.00E+02	3.54E-09	1.15E+05	6.17E-12
155Eu	4.90E+00	5.14E-09	9.40E+02	5.46E-12	7.53E+05	6.82E-15
226Ra	1.60E+03	7.42E-07	1.20E+01	6.19E-08	5.50E+01	1.35E-08
232Th	1.41E+10	1.36E-08	1.00E-01	1.36E-07	1.75E+01	7.75E-10
233U	1.59E+05	1.04E-07	4.20E+00	2.48E-08	2.22E+02	4.68E-10
234U	2.45E+05	1.04E-07	4.20E+00	2.48E-08	2.22E+02	4.68E-10
235U	7.04E+08	9.77E-09	4.20E+00	2.33E-09	2.38E+02	4.11E-11
238U	4.47E+09	1.83E-07	4.20E+00	4.35E-08	2.39E+02	7.64E-10
238Pu	8.77E+01	3.59E-07	6.20E-01	5.79E-07	6.17E+01	5.82E-09
239Pu	2.44E+04	1.09E-05	5.20E-01	2.10E-05	5.52E+01	1.98E-07
240Pu	6.57E+03	1.09E-05	5.20E-01	2.10E-05	5.60E+01	1.95E-07
241Pu	1.44E+01	3.14E-05	3.20E+01	9.81E-07	2.89E+03	1.09E-08
241Am	4.33E+02	5.18E-06	5.20E-01	9.96E-06	5.48E+01	9.44E-08
SUM				5.48E-05		5.20E-07
			=========>	5.48E-01 mRem for total release		

1) Values taken from LA-12846-MS, "Specific Activities and DOE-STD-1027-92 Hazard Category 2 Thresholds"
2) Values as calculated on the following pages.
3) Values taken from LA-12981-MS, "Table of DOE-STD-1027-92 Hazard Category 3 Threshold Quantities for the ICRP-30 list of 757 Radionuclides" (except for Tritium whose value was taken from Change 1 to DOE-STD-1027-92).
4) Values developed by dividing the actual isotopic inventory by the respective Haz Cat 3 Threshold.
5) Values developed by dividing the actual isotopic inventory by the respective Haz Cat 2 Threshold.

Above Ground Canal House / Water Treatment House Contaminated Surface Area Estimates*

(1)	Canal House floor slab @ 34' length X 14' width =	476 sq.ft.	
	Canal House walls @ 17' height X (34'+14'+34'+14') length =	1632 sq.ft.	
	Canal House ceiling (roof) @ 34' length X 14' width=	476 sq.ft.	
	Total =	2584 sq.ft.	= 2.40E+06 sq.cm.
(2)	W. T. House floor slab @ 34' length X 14' width =	476 sq.ft.	
	W. T. House walls @ 12'-6" height X (34'+14'+34'+14') length =	1200 sq.ft.	
	W. T. House inner walls @ 8' height X (7X7' + 4X5') length =	552 sq.ft.	
	W. T. House ceiling (roof) @ 34' length X 14' width=	476 sq.ft.	
	Total =	2704 sq.ft.	= 2.51E+06 sq.cm.

* Dimensions taken from a review of the following drawings by the BGRR-DP Field Engineer:
Dwg. No. S-1, Job No. 3252A, Sht 2 of 5, "Structural Steel and Concrete Details"
Dwg. No. S-1, Job No. 3686, Sht 1 of 2, "Structural"
Dwg. No. M-709-5A, "Canal & Material Handling Eqpt Exterior"
Dwg Nos. C-709-1A,-2A, "Canal - East of Line 7 of Bldg 701 Plans, Sections & Elevations"

Above Ground Canal & Water Treatment House Source Term

1) Total contaminated internal surface area of Canal House= **2.40E+06 sq.cm.**
Total contaminated internal surface area of Water Tr'tm't House = **2.51E+06 sq.cm.**
[where 1 sq.ft. = 929.0304 sq.cm.]

---

2) Average Cs-137 smearable activity (post-cleanup) on interior surface of CH & WTH =

North Wall - Canal =	7.25E-06	uCi/100 sq.cm.
East Wall - Canal =	7.60E-06	uCi/100 sq.cm.
South Wall - Canal =	1.63E-05	uCi/100 sq.cm.
Floor - Canal =	6.72E-05	uCi/100 sq.cm.
Floor - Canal =	1.73E-04	uCi/100 sq.cm.
Average	5.43E-05	" "
Average Cs-137 smearable activity =	**5.43E-05**	**uCi/100 sq.cm.**
Total Canal House Cs-137 smearable activity =	**1.30E+00**	**uCi**
Total Water Tr'tm'nt House Cs-137 smearable activity =	**1.36E+00**	**uCi**

With regard to the question of why the average surface activity was not a weighted one, based upon areas of the surfaces from which the smears were taken, the following is noted: As the floor surface values represent the highest measurements to be considered, and no floor activity removals are to be included under this USID/SE, weighting of the average activity by actual surface areas to be remediated/removed would reduce the source term inventory and a degree of the conservatism inherent in the estimate.

Though it appears that only a limited number of smears were used for characterization, much additional negative data was reviewed. To develop even the small source terms generated here took a number of conservative steps that were not per MARSSIM protocol for declaring an area free from contamination, but were more than adequate for attributing a conservative source term.

Another point of conservatism inherent in the estimate is the use of the Canal House contamination values for both inventories, as the actual isotopic inventory values for the concrete cores taken from the Water Treatment House are consistently and clearly less than the comparable values taken from the Canal House samples.

---

3) Typical ratio of fixed to smearable activity observed on interior surface of CH & WTH = 10 : 1

Average Cs-137 fixed activity =	**5.43E-04**	**uCi/100 sq.cm.**
Total Canal House Cs-137 fixed activity =	**1.30E+01**	**uCi**
Total Water Tr'tm'nt House Cs-137 fixed activity =	**1.36E+01**	**uCi**

The basis for the selection of the 10:1 ratio of fixed to loose contamination was by review with the Lead Radiological Technician of all available BGRR-DP smear and survey data for contamination. It also represents typical results for other reactor decommissionings.

---

4) Average Cs-137 total surface activity (post-cleanup) on interior surface of CH & WTH =
5.43E-05 uCi/100 sq.cm. + 5.43E-04 uCi/100 sq.cm. = **5.97E-04 uCi/100 sq.cm.**

Total Canal House Cs-137 surface activity =	**1.43E+01**	**uCi**
Total Water Tr'tm'nt House Cs-137 surface activity =	**1.50E+01**	**uCi**

5) In the absence of direct isotopic distribution measurements, the observed Cs-137 values will be used to scale off the other nuclides from the equivalent ratios observed in BGRR-ASA Rev. 3, Table 2.3.2-1,"Residual BOP Inventory Based on B&W NEL and ISOCS Results".

The use of Cs-137 as a scaling factor is justified by the fact that Cs-137 was always identified and available for scaling. It has always represented one of the two largest contributors to overall radiological activity (along with Sr-90). There is no better single nuclide available. Furthermore, given the known values and ratios of activity within the concrete underlying these structures (as given in the BGRR-ASA), the case can be made for the conservative nature of scaling isotopes believed to be present, but not specifically measured, from the measured value(s) of Cs-137.

NUCLIDE	BGRR-ASA CH. CONC.	CH Cs-137 Scaling Fact	Canal House Surface Act.	BGRR-ASA WTH CONC	WTH Cs-137 Scaling Fact	WT House Surface Act.
H-3	8.44E-04	5.32E-05	4.49E-08	1.92E-06	2.44E-02	4.69E-08
C-14	1.47E-04	5.32E-05	7.81E-09	3.34E-07	2.44E-02	8.16E-09
Fe-55	1.32E-06	5.32E-05	7.02E-11	2.20E-07	2.44E-02	5.37E-09
Co-60	5.24E-04	5.32E-05	2.79E-08	8.77E-05	2.44E-02	2.14E-06
Ni-63	2.22E-03	5.32E-05	1.18E-07	5.06E-06	2.44E-02	1.24E-07
Sr-90	7.75E-02	5.32E-05	4.12E-06	1.78E-04	2.44E-02	4.35E-06
Y-90	7.75E-02	5.32E-05	4.12E-06	1.78E-04	2.44E-02	4.35E-06
Tc-99	3.35E-05	5.32E-05	1.78E-09	7.65E-08	2.44E-02	1.87E-09
I-129	1.10E-05	5.32E-05	5.85E-10	2.51E-08	2.44E-02	6.13E-10
Cs-137	2.69E-01	5.32E-05	1.43E-05	6.14E-04	2.44E-02	1.50E-05
Eu-152	3.54E-04	5.32E-05	1.88E-08	5.92E-05	2.44E-02	1.45E-06
Eu-154	1.71E-04	5.32E-05	9.09E-09	2.86E-05	2.44E-02	6.99E-07
Eu-155	1.12E-05	5.32E-05	5.95E-10	1.86E-07	2.44E-02	4.54E-09
Ra-226	2.68E-04	5.32E-05	1.42E-08	2.98E-05	2.44E-02	7.28E-07
Th-232	4.91E-06	5.32E-05	2.61E-10	5.46E-07	2.44E-02	1.33E-08
U-234	7.54E-05	5.32E-05	4.01E-09	8.37E-06	2.44E-02	2.04E-07
U-235	3.53E-06	5.32E-05	1.88E-10	3.92E-07	2.44E-02	9.58E-09
U-238	6.64E-05	5.32E-05	3.53E-09	7.34E-06	2.44E-02	1.79E-07
Pu-238	1.30E-04	5.32E-05	6.91E-09	1.44E-05	2.44E-02	3.52E-07
Pu-239/40	7.91E-03	5.32E-05	4.20E-07	8.78E-04	2.44E-02	2.14E-05
Pu-241	1.13E-02	5.32E-05	6.01E-07	1.26E-03	2.44E-02	3.08E-05
Am-241	1.87E-03	5.32E-05	9.94E-08	2.08E-04	2.44E-02	5.08E-06

Table 2.3.2-1 RESIDUAL BOP INVENTORY BASED ON B&W NEL AND ISOCS RESULTS

NEL ID# BNL ID# Material Type Tot. Weight [lbs] Tot. Weight [g]	Combined N&S BGD Hxers 3600 1.63E+06	Combined N&S BGD Media 4233 1.92E+06	Combined N&S BGD Mesh 5760 2.61E+06	Combined N&S BGD Fines 2780 1.26E+06	Combined Canal & House Concrete 116960 5.31E+07	*Combined W.T. House Concrete 35200 1.60E+07	*Combined BOP Rad. Inv. Summary [Ci]	Nuclide Specific Cat 3 Threshold	Nuclide Specific Cat 3 Fraction
H-3 [Ci]	8.42E-06	3.42E-03	2.65E-02	2.03E-03	8.44E-04	1.92E-06	3.28E-02	1.60E+04	2.05E-06
C-14 [Ci]	8.04E-06	6.26E-04	4.53E-03	3.95E-04	1.47E-04	3.34E-07	5.71E-03	4.20E+02	1.36E-05
***Fe-55 [Ci]	1.08E-07	1.61E-06	1.18E-05	6.46E-06	1.32E-06	2.20E-07	2.15E-05	5.40E+03	3.98E-09
Co-60 [Ci]	4.32E-05	6.41E-04	4.70E-03	2.57E-03	5.24E-04	8.77E-05	8.56E-03	2.80E+02	3.06E-05
Ni-63 [Ci]	3.87E-04	3.71E-03	6.10E-02	1.88E-02	2.22E-03	5.06E-06	8.61E-02	5.40E+03	1.59E-05
Sr-90 [Ci]	7.41E-03	2.69E+00	1.90E-01	7.53E-02	7.75E-02	1.78E-04	3.04E+00	1.60E+01	1.90E-01
Y-90 [Ci]	7.41E-03	2.69E+00	1.90E-01	7.53E-02	7.75E-02	1.78E-04	3.04E+00	1.42E+03	2.14E-03
Tc-99 [Ci]	5.40E-05	4.90E-04	6.83E-04	4.59E-05	3.35E-05	7.65E-08	1.31E-03	1.70E+03	7.68E-07
I-129 [Ci]	1.32E-05	1.69E-04	2.12E-04	2.27E-05	1.10E-05	2.51E-08	4.29E-04	6.00E-02	7.15E-03
Cs-137 [Ci]	8.65E-03	6.95E+00	2.94E+00	3.14E-01	2.69E-01	6.14E-04	1.05E+01	6.00E+01	1.75E-01
Eu-152 [Ci]	2.41E-05	1.43E-03	3.53E-03	3.76E-04	3.54E-04	5.92E-05	5.78E-03	2.00E+02	2.89E-05
Eu-154 [Ci]	9.85E-06	8.01E-04	1.75E-03	3.13E-05	1.71E-04	2.86E-05	2.80E-03	2.00E+02	1.40E-05
Eu-155 [Ci]	1.69E-05	0.00E+00	0.00E+00	0.00E+00	1.12E-05	1.86E-07	2.82E-05	9.40E+02	3.00E-08
Ra-226 [Ci]	1.68E-05	2.34E-03	1.05E-03	1.88E-04	2.68E-04	2.98E-05	3.89E-03	1.20E+01	3.24E-04
Th-232 [Ci]	2.17E-06	3.26E-05	2.71E-05	3.97E-06	4.91E-06	5.46E-07	7.13E-05	1.00E-01	7.13E-04
U-234 [Ci]	8.56E-05	1.44E-04	4.95E-04	2.88E-04	7.54E-05	8.37E-06	1.10E-03	4.20E+00	2.61E-04
U-235 [Ci]	9.76E-06	7.49E-06	1.98E-05	1.02E-05	3.53E-06	3.92E-07	5.12E-05	4.20E+00	1.22E-05
U-238 [Ci]	5.45E-06	1.10E-04	4.68E-04	3.03E-04	6.64E-05	7.34E-06	9.61E-04	4.20E+00	2.29E-04
Pu-238 [Ci]	6.61E-06	7.01E-04	6.98E-04	3.33E-04	1.30E-04	1.44E-05	1.88E-03	6.20E-01	3.04E-03
Pu-239/40 [Ci]	3.65E-04	3.38E-02	5.20E-02	1.99E-02	7.91E-03	8.78E-04	1.15E-01	5.20E-01	2.21E-01
**Pu-241 [Ci]	5.23E-04	4.84E-02	7.45E-02	2.86E-02	1.13E-02	1.26E-03	1.65E-01	3.20E+01	5.14E-03
Am-241 [Ci]	7.74E-05	1.13E-02	1.11E-02	2.61E-03	1.87E-03	2.08E-04	2.72E-02	5.20E-01	5.23E-02
								SUM	6.57E-01

*For ISOCS only characterization data available for these samples, scaled values were attributed for nuclides other than Co-60, Cs-137, and Am-241.

**Due to limited number of samples analyzed for Pu-241, (Hxers only) all other columns scaled off Hxers.

***Though Fe-55 was not analyzed for in the BOP samples, its values are scaled from those found in the composite pile graphite sample analyzed for Fe-55 (which was below MDA so the MDA value was used).

Above Ground Canal House / Water Treatment House Sampling & Analysis

ASL #	DATE	TIME	MAT'L	ALPHA [uCi/mL]	BETA [uCi/mL]	TRITIUM [uCi/mL]	MDL - uCi/mL Alpha	Beta	Tritium	GAMMA Nuclide	ACTIVITY [pCi/gm]	ND-Limit [pCi/gm]
IG01364			Concrete							Co-60	ND	4.90E+00
WTHE	Dia @ 20.0 cm		Core							Cs-137	7.56E+01	
Top	OAL @ 22.0 cm		1.77E+04 gm							Am-241	ND	1.22E+01
IG01368			Concrete							Co-60	4.01E+01	
EEC	Dia @ 20.3 cm		Core							Cs-137	3.63E+04	
Top/Top	OAL @ 39.4 cm		3.26E+04 gm							Am-241	ND	5.32E+01
IG01375			Concrete							Co-60	ND	1.32E+01
WWJ	Dia @ 14.6 cm		Core							Cs-137	2.63E+02	
Top/Top	OAL @ 12.5 cm		5.36E+03 gm							Am-241	ND	3.63E+01
IG01382			Concrete							Co-60	1.25E+01	
CJ	Dia @ 15.2 cm		Core							Cs-137	1.40E+04	
Top/Top	OAL @ 31.8 cm		1.48E+04 gm							Am-241	ND	5.08E+01
IG01387			Concrete							Co-60	ND	6.40E+00
NWC	Dia @ 15.2 cm		Core							Cs-137	1.79E+04	
Top/Top	OAL @ 29.8 cm		1.38E+04 gm							Am-241	ND	2.65E+02
IG01391			Concrete							Co-60	8.90E+00	
NCJ	Dia @ 15.2 cm		Core							Cs-137	5.98E+03	
Top/Top	OAL @ 31.8 cm		1.48E+04 gm							Am-241	ND	4.07E+01
IG01395			Concrete							Co-60	ND	5.50E+00
WTHW	Dia @ 15.2 cm		Core							Cs-137	6.06E+01	
Top/Top	OAL @ 22.9 cm		1.06E+04 gm							Am-241	ND	1.37E+01
IG01402			Concrete							Co-60	ND	1.44E+01
CSW	Dia @ 7.6 cm		Core							Cs-137	2.87E+03	
Top/Top	OAL @ 31.8 cm		3.69E+03 gm							Am-241	ND	6.13E+01
IG01404			Concrete							Co-60	ND	1.47E+01
CEW	Dia @ 7.6 cm		Core							Cs-137	1.85E+03	
Top/Top	OAL @ 31.1 cm		3.61E+03 gm							Am-241	ND	5.71E+01

ASL #	DATE	TIME	MAT'L	ALPHA [uCi/mL]	BETA [uCi/mL]	TRITIUM [uCi/mL]	MDL - uCi/mL Alpha	MDL - uCi/mL Beta	MDL - uCi/mL Tritium	GAMMA Nuclide	ACTIVITY [pCi/gm]	ND-Limit [pCi/gm]
IG01406			Concrete							Co-60	ND	1.72E+01
CNW	Dia @ 7.6 cm		Core							Cs-137	1.05E+03	
Top/Top	OAL @ 28.6 cm		3.32E+03 gm							Am-241	ND	6.19E+01
IG01475			Concrete							Co-60	ND	1.11E+02
CS-3	Dia @ 14.6 cm		Core							Cs-137	2.75E+05	
Top/Top	OAL @ 5.1 cm		2.19E+03 gm							Am-241	ND	1.35E+03
IG01410			Concrete							Co-60	ND	5.20E+00
WWS	Dia @ 15.2 cm		Core							Cs-137	2.30E+03	
Top/Top	OAL @ 29.8 cm		1.38E+04 gm							Am-241	ND	3.07E+01
Survey #00-202 Interior - C. H. Bldg 709	3-10-00			Post-cleanup survey, gamma activity @ 2.00E-02 to 5.00E+00 mr/hr Post-cleanup survey, beta activity @ 6.00E+01 to 1.60E+02 mrad/hr								
Survey #00-202 Interior - C. H. Bldg 709	3-10-00			Post-cleanup survey,smearable activity @ <1,000 to 60,000 dpm/100 cm^2 beta Post-cleanup survey,smearable activity @ <MDA to 16 dpm/100 cm^2 alpha								
2103104-02 North Wall Canal-709	01/30/01	1703 hrs	Smear	3.2 dpm/smear	1.4 dpm/smear		8.8 dpm/smear	34.4 dpm/smear		Cs-137	7.25E-06	uCi/smear
2103104-03 East Wall Canal-709	01/30/01	1705 hrs	Smear	-0.1 dpm/smear	8.7 dpm/smear		8.8 dpm/smear	34.4 dpm/smear		Cs-137	7.60E-06	uCi/smear
2103104-04 South Wall Canal-709	01/30/01	1708 hrs	Smear	-0.1 dpm/smear	15.2 dpm/smear		8.8 dpm/smear	34.4 dpm/smear		Cs-137	1.63E-05	uCi/smear
2103104-05 Floor Canal-709	01/30/01	1711 hrs	Smear	-0.8 dpm/smear	370.6 dpm/smear		8.8 dpm/smear	34.4 dpm/smear		Cs-137	6.72E-05	uCi/smear
2103104-06 Floor Canal-709	01/30/01	1715 hrs	Smear	2.7 dpm/smear	231.1 dpm/smear		8.8 dpm/smear	34.4 dpm/smear		Cs-137	1.73E-04	uCi/smear

ATTACHMENT 1

ERD / BGRR-DP

Job Safety Analyses for

Canal and Water Treatment House Removal Action

ERD-BGRR TASK-SPECIFIC JOB SAFETY ANALYSIS

Project Task: **DE-ENERGIZE, STABILIZE AND REMOVE ABANDONED EQUIPMENT FROM THE CANAL AND WATER TREATMENT HOUSES**

Walk-through Participants: M. Lilimpakis
T. Rountree

Date: February 12, 2001

Reference Documentation:

1. Technical Work Document, ERD-BGRR-TP-01-01
2. Work Permit No. _____

Attachments: A. Emergency Call-out List

Reviewed by: H. Bachner
S. Musolino
M. Lilimpakis
S. Moss
T. Jernigan
T. Monahan

Preparer: _____ 2/13/01
Tom Rountree Date

Approved by: _____ 2/12/01
Stephen Pulsford Date

DE-ENERGIZE, STABILIZE & REMOVE ABANDONED EQUIPMENT FROM THE CANAL AND WATER TREATMENT HOUSES

Task	Step or activity	Hazard	Control
Mobilize equipment to the site	Moving equipment	Back injuries Hand Injuries Radiological contamination	Workers are trained in proper lifting techniques. Use of work gloves in addition to RWP required gloves Personnel trained to BNL standards Use of an approved RWP and coverage by RCT
Survey in the building	Survey over 6 feet above the ground	Falls	Personnel trained to BNL standards Use of long handing tool to survey Use of scaffolding assembled by BNL PE and inspected by competent person, or use of a manlift by qualified personnel
ALARA decontamination	Decontamination of equipment	Skin contamination Falls	Personnel trained to BNL standards Use of an approved RWP and coverage by a RCT Personnel trained to BNL standards Use of scaffolding assembled by BNL PE and inspected by competent person, or use of a manlift by qualified personnel
Remove electrical equipment	Disconnect building from the power	Electrocution	LOTO as required

Task	Step or activity	Hazard	Control
	Removal of conduit	Personal injury from power tools Exposure to ACM from cementious asbestos walls	Power to the building will be permanently disconnected at the main breaker box and wires physically disconnect from the box Personnel trained in use of tools Use of GFCI Personnel trained in asbestos awareness Brackets will be removed by unscrewing the bracket from the wall Bracket will be cut with a power tools and a HEPA vacuum will be used to collect any ACM dusts generated
Removal of piping	Cut piping at walls	Personal injury from power tools	Personnel trained in use of tools Use of GFCI
Remove Crane	Survey crane and decontamination of crane	Falls Skin Contamination	Personnel trained to BNL standards Use of scaffolding assembled by BNL PE and inspected by competent person, or use of a manlift by qualified personnel Personnel trained to BNL standards Use of an approved RWP and coverage by a qualified RCT

Task	Step or activity	Hazard	Control
	Remove crane from I-beam	Personnel injuries from crane falling	Crane will be moved to outside of the building and picked off of the I-Beam by qualified BNL riggers
Remove Steel plates from cells in water treatment house	Access to the cells #3 and #4	Falls	Personnel trained to BNL standards Ladders will be set up on each side of the cell for access. Ladders will be tied down.
	Remove plates from cells	Personnel injury from the plates falling	Rigging performed by BNL qualified riggers All personnel will be out of the cells and never under the load
	Survey the plates for release	Skin contamination	Personnel trained to BNL standards Use of an approved RWP and coverage by a qualified RCT
Install covers over openings on the ground level in canal house	Remove handrails	Personal injury from power tools	Personnel trained in use of tools Use of GFCI
		Fall into floor opening	Personnel trained to BNL standards Barricades while working around openings Floor openings to be covered with ¾" CDX plywood and plywood attached to the structure.
		Water intrusion through cover	Plywood to be covered with paint or roofing materials

Task	Step or activity	Hazard	Control
Remove lights	Removal of lights left to provide light during other activities	Falls Skin contamination	Install temp light as required Personnel trained to BNL standards Use of scaffolding assembled by BNL PE and inspected by competent person, or use of a manlift by qualified personnel Personnel trained to BNL standards Use of an approved RWP and coverage by a qualified RCT

ERD-BGRR TASK-SPECIFIC JOB SAFETY ANALYSIS DE-ENERGIZE, STABILIZE & REMOVE ABANDONED EQUIPMENT FROM THE CANAL AND WATER TREATMENT HOUSES				
Task	Steps or Activity	Hazards	Control	Comments
UNANTICIPATED HAZARDS - ES&H Coordinator will add any additional information if hazards change within scope of work.				

Attachment A

Emergency Response

First Aid/Medical Assistance.....2222 or 911 or 344-2222 cellular

Spills Reporting..... 2222

	Voice	Pager
Project Manager (Stephen Pulsford)	344-2394	554-7028
Project ES&H Manager (Stephen Musolino)	344-4211	441-8136
Construction/Facility Manager (Hank Bachner)	344-8246	554-4062
ES&H Coordinator (Tom Rountree)	344-8248	554-4313
Local Emergency Coordinator (Tom Rountree)	344-8248	554-4313
DOE BGRR Project Manager (Mark Parsons)	344-7978	
DOE Facility Representative for BGRR (Maria Dikeakos)	344-3950	800-796-7363 pin 1066603

Preliminary MEDICAL CARE is provided through Fire/Rescue and Occupational Medicine Clinic.

ERD-BGRR TASK-SPECIFIC JOB SAFETY ANALYSIS

Project Task: **DEMOLITION OF THE CANAL AND WATER TREATMENT HOUSES**

Walk-through Participants: M. Lilimpakis
T. Rountree

Date: March 13, 2001

Reference Documentation:

1. Technical Work Document, ERD-BGRR-TP-01-02
2. Work Permit No. _____

Attachments: A. Emergency Call-out List

Reviewed by: H. Bachner
S. Musolino
M. Lilimpakis
S. Moss
T. Jernigan
T. Monahan

Preparer: _____ 3/13/01
Tom Rountree Date

Approved by: _____ 3/13/01
Walter Lieneck Date

DEMOLITION OF CANAL AND WATER TREATMENT HOUSES

Task	Step or Activity	Hazard	Control
Mobilize equipment to the site	Moving equipment	Back injuries	Workers are trained in proper lifting techniques.
		Hand Injuries	Use of work gloves in addition to RWP required gloves
		Radiological contamination	Personnel trained to BNL standards Use of an approved RWP and coverage by RCT
Erection of the Duct Service Building (DSB)	Excavation of foundation by Plant Engineering (PE)	Hitting underground utilities	Digging permit to locate and mark utilities Hand digging within 2' of utilities
		Injury from being struck by equipment	Equipment operator trained Swing area barricaded as necessary Personnel instructed to always make eye contact with operator prior to moving around operating equipment
	Delivery of DSB	Personal injury while DSB is being unloaded	Unloading done by equipment Personnel kept away from pieces while being moved Use of tag lines No one under load

Task	Step or Activity	Hazard	Control
	Erection of DSB	Personal injury while using tools	Supervisor verifies workers proficiency with tool prior to use
		Falls	Personnel trained to BNL standards Scaffolds assembled by trained personnel and inspected by competent person Personnel trained in use of manlifts
	Installation of lights and electrical power	Falls	See above
		Electrocution	Power will be connected by PE after installation of electrical systems. Lock out/Tag out procedures to be followed
Remove canal and water treatment houses to the 109' level	Remove doors and windows	Personal injury from glass	Entire frame will be removed as a unit. If glass is already damaged, glass will be removed.
	Remove asbestos containing material (ACM) on roof and ACM wall panels	Exposure to airborne ACM	Removal contractor certified and pre-approved by BNL to remove ACM (BOA Contractor) BOA employees trained to remove ACM Bolts will be removed with hand tools; will only be cut if removal with hand tools is not possible, if cutting is required a HEPA vacuum will be used to collect any asbestos fibers generated

Task	Step or Activity	Hazard	Control
			ACM panels will be lowered to ground as intact as possible
		Back injuries while lowering panels	Personnel trained to BNL standards
		Falls	See above
		Radiological exposure	BOA employees radiologically qualified Use of an approved RWP to define PPE, air monitoring, etc.
	Removal of steel supports	Injuries from cutting steel supports	When methods are determined, the hazards and controls will be documented on supplement sheet
		Injuries from lowering the steel supports to the ground	When methods are determined, the hazards and controls will be documented on supplement sheet
		Falls	Use of a warning line 6' from the edge of the roof Use of a spotter if working closer than 6' from roof
	Remove ACM roofing material in built-up roofing	Exposure to airborne ACM	Same controls as above
		Injuries from lowering waste to ground	Material to be lowered to ground, not dropped Material to be lowered in specific area

Task	Step or Activity	Hazard	Control
			Personnel trained in proper lifting technique
	Remove cinder black walls from water treatment house	Personnel injury from heavy machinery	Operators trained in use of machinery; personnel trained to stay out of hazard area; hazard area demarcated with barricade tape; equipment inspected daily
		Personnel injury when moving blocks	Use of proper work gloves Personnel trained in proper lifting techniques
		Airborne radiological contamination	Trained personnel Use of an RWP to indicate hold points Air monitoring
		Hand, face or eye injury due to vibration of jack or chipping hammer	Use of anti-vibration gloves Use of eye and face protection
		Exposure to airborne radiologically contaminated dust	Air monitoring Use of an RWP with hold points
		Exposure to dusts	Air monitoring with real time aerosol monitor and air sampling pumps
	Remove concrete ceiling	Personnel injury while removing panels	When method of lifting panels is determine, the hazards and controls will be documented on the

Task	Step or Activity	Hazard	Control
			supplemental sheet Personnel kept from under load, use of tag lines Lifting and rigging performed by qualified BNL personnel
	Remove structural steel to ground level	Personal injury during cutting	When method of cutting steel is determined, the hazards and controls will be documented on the supplemental sheet. Lifting and rigging performed by qualified BNL personnel
	Install covers over vent openings on roof	Falls from roof	Personnel kept from under load, use of tag lines Personnel trained to BNL standards Use of warning lines 6' from edge of roof
	Installation of water intrusion barrier	Exposure to cold roofing sealant	Use of a spotter if within 6' of the roof Use of PPE as per the MSDS
		Fall	Personnel trained to BNL standards Use of warning lines 6' from edge of roof Use of a spotter if within 6' of the roof

Task	Step or Activity	Hazard	Control
Removal of floor slabs	Demolition of floor slab	Noise	Personnel in a Hearing Conservation program Hearing protection
		Exposure to dusts, perhaps silica containing	Monitoring with direct reading instrument Use of water as an engineering control for dust, if necessary
		Vibration hazard if using a jack hammer	Use of anti-vibration gloves
		Personal injury due to chips flying into face and eyes	Use of eye and face protection

ERD-BGRR TASK-SPECIFIC JOB SAFETY ANALYSIS DE-ENERGIZE, STABILIZE & REMOVE ABANDONED EQUIPMENT FROM THE CANAL AND WATER TREATMENT HOUSES				
Task	Steps or Activity	Hazards	Control	Comments
UNANTICIPATED HAZARDS - ES&H Coordinator will add any additional information if hazards change within scope of work.				

Attachment A

Emergency Response

First Aid/Medical Assistance.....2222 or 911 or 344-2222 cellular

Spills Reporting..... 2222

	Voice	Pager or Cell
Project Manager (Walter Lieneck)	344-2394	516-779-3118
Project Engineer (Stephen Pulsford)	344-4752	554-7038
Project ES&H Manager (Stephen Musolino)	344-4211	441-8136
Construction/Facility Manager (Hank Bachner)	344-8246	554-4062
ES&H Coordinator (Tom Rountree)	344-8248	554-4313
Local Emergency Coordinator (Tom Rountree)	344-8248	554-4313
DOE BGRR Project Manager (Mark Parsons)	344-7978	
DOE Facility Rep. for BGRR (Maria Dikeakos)	344-3950	800-796-7363 pin 1066603

Preliminary MEDICAL CARE is provided through Fire/Rescue and Occupational Medicine Clinic

ATTACHMENT 2

ERD / BGRR-DP

Technical Work Documents for

Canal and Water Treatment House Removal Action

ERD Operations Procedures Manual

TECHNICAL WORK DOCUMENT

DE-ENERGIZE, STABILIZE, AND REMOVE ABANDONED EQUIPMENT FROM THE CANAL AND WATER TREATMENT HOUSES

Text Pages 1 through 8
Attachment(s) 8.1 & 8.2

Temporary Procedure

Approved: _____ Date: 1/30/01
Stephen K. Pulsford, Manager
BGRR Decommissioning Project

Preparer: **T. Jernigan**

Expiration Date: **December 31, 2001**

ERD OPM No.: **ERD-BGRR-TP-01-01**

1.0 PURPOSE AND SCOPE

1.1 The purpose of this procedure is to provide the detailed work instructions for the preparation of the Canal House (709) and Water Treatment House (709A) structures for demolition and disposal.

1.2 The scope of the work activities prescribed herein includes the following:

- De-energizing and permanently isolating all energy sources (electrical, air, water, etc.) from the buildings.
- Performing decontamination and stabilization activities to remediate, as much as practicable, all radiological and hazardous substance hazards (e.g., fixative application).
- Physical removal of all abandoned equipment, materials, and components inside the building, leaving only the building "shell" for final demolition and disposal.
- Installing isolation covers on the 14' x 4' hatch opening, the 30" x 32" ladder opening in the canal floor (el. 109'), and miscellaneous penetrations through the elev. 109' floor slab.

2.0 RESPONSIBILITIES

2.1 The BGRR-DP Construction Manager or designee is responsible for the proper execution of this Work Document.

2.2 The BGRR-DP Field Engineer (FE) is responsible for direction of all field work activities prescribed in this Work Document.

2.3 The BGRR-DP Project Engineer or designee is responsible for the technical content of this Work Document.

2.4 The ERD Environment, Safety and Health Manager (ESH) or designee is responsible for the assessment of environment, safety and health issues associated with the work activities delineated herein.

2.5 The BGRR-DP Facility Support Representative is responsible for implementation of the requirements of the BNL RadCon Manual through the Institutional and Facility Support RadCon procedures.

2.6 The ES&H Coordinator and the Field Engineer are responsible to analyze the non-radiological hazards associated with the work through implementation of ERD-OPM-4.6, Hazardous Material Analysis for BGRR Decommissioning Activities.

2.7 The ERD Quality Representative is responsible for review of the Task Quality Plan for the work activities prescribed herein.

2.8 The Waste Management Representative is responsible for identification of appropriate waste containers and/or packaging, determination of waste disposal pathways, and required sampling for waste disposal.

3.0 PREREQUISITES

3.1 A Task-specific Job Safety Analysis (JSA) for this work activity has been approved and reviewed by all personnel involved with these work activities.

FE Initial: _____ Date: _____

3.2 An Unreviewed Safety Issue Determination/Safety Evaluation (USID/SE) for this task has been approved.

USID/SE No:_____ FE Initial:_____ Date: _____

3.3 A Radiological Work Permit (RWP) has been issued:

RWP No:_____ FE Initial:_____ Date: _____

3.4 A Hazardous Materials Assessment has been completed in accordance with Ref. 7.3 for all of the work areas covered in this procedure, and all identified hazardous materials have been removed or stabilized to ensure a safe working environment.

ESH Initial: _____ Date: _____

3.5 Waste disposal container(s) and/or packaging available for radiological and hazardous items removed during these work activities.

FE Initial: _____ Date: _____

3.6 Radiological surveys of the Canal and Water Treatment houses have been performed. Copies of these surveys have been provided as an enclosure to the Work Package (Blue Book) for this work activity.

FE Initial: _____ Date: _____

4.0 PRECAUTIONS AND LIMITATIONS

4.1 This document is a TEMPORARY procedure valid only for the specific work activities delineated in **Section 5.0**, and may only be implemented in conjunction with an approved Work Permit, and other approved appropriate documents and permits (e.g. Radiation Work Permit) as stated on and attached to the implementing Work Permit.

4.2 The internal surfaces of the buildings and the contents therein are known to be contaminated with radionuclides such as Co-60, Cs-137, Am-241, Pu-239 and others.

4.3 Both the JSA and USID/SE BGRR-01-01 are based on NO FLAME CUTTING of components, which are known or suspected to be radiologically contaminated. If it is later determined that flame cutting is required, both of these documents shall be revised.

Flame cutting of components which have been surveyed and verified not to be radiologically contaminated is allowed.

4.4 No power-operated equipment such as rotary grinders, wire brushes, power-washers shall be used for decontamination of components. Methods for decontamination shall be limited to use of masslin wipes, abrasive pads, hand-held wire brushes, and approved liquid cleaners.

<u>WARNING</u> **No component, equipment, material shall be removed unless it has been identified to be safe for removal by the Field Engineer as delineated in Section 5.1.**

5.0 PROCEDURE

5.1 Decontamination (Decon) for ALARA

NOTE 1: *The purpose of removing loose contamination from the structure, components and equipment is to minimize the spread of such contamination during the demolition of the structure, thereby minimizing the exposure risks to personnel and the environment. The Field Engineer and the Facility Support Representative shall evaluate the extent of decontamination/stabilization required.*

NOTE 2: *Extensive radiological surveys of the Canal and Water Treatment Houses have been performed, and shall be provided as an enclosure to the Work Package (Blue Book) for this work activity.*

5.1.1 Under the direction of the Field Engineer, the interior surfaces of the Canal and Water Treatment Houses shall be radiologically decontaminated to the maximum extent practicable to remove loose surface contamination. Interim radiological surveys shall be performed to the extent necessary to determine effectiveness of the decon activities. No power-operated equipment such as rotary grinders, wire brushes, power-washers shall be used. Methods for decontamination shall be limited to use of masslin wipes, abrasive pads, hand-held wire brushes, and approved liquid cleaners. HEPA filter vacuum cleaners are permitted.

5.1.2 Upon completion of above step 5.1.1, and based on the interim radiological surveys, the Field Engineer shall direct the application of fixative to the interior building surfaces to minimize the potential for the creation and spread of loose contamination. To minimize waste, the fixative should only be applied to those areas that have been determined to require fixative application.

5.1.3 Perform a post-decon radiological survey of all surfaces that were decontaminated/stabilized and insert a copy of the survey forms into this Work Package.

5.2 Isolation of Energy Sources & Removal of Equipment

5.2.1 Using Attachment 8.1, the Field Engineer shall identify all equipment, material and components to be removed. List the component identity, and identify whether or not the item has an energy source. The Field Engineer shall supervise work activities to ensure safe removal of components using the following guidelines:

- LIST the equipment/components to be removed on Attachment 8.1
- PERFORM a field walkdown of the equipment/components to verify that all power/energy sources have been physically disconnected.
- If required, LOCKOUT/TAGOUT, power/energy sources then DISCONNECT all power/energy sources
- VERIFY that a Hazardous Materials Assessment has been completed in accordance with Ref. 7.3
- VERIFY that a Radiological Survey has been performed, and that the Waste Management Representative has identified the disposal path.
- The Field Engineer shall identify the boundaries of the component to be removed by using green paint, marker, or identification tags.
- REMOVE the equipment/components by the mechanical means that has the lowest potential for creating airborne contamination.

5.3 Isolation of Above from Below Grade Portions of Canal

5.3.1 Referring to Attachment 8.2, INSTALL the isolation barrier on the 14' x 4' hatch opening as follows:

- Remove the handrail
- Using 16cc nails and construction adhesive, construct the 2" x 12" pressure-treated wood rim joist; the rim joist shall bear on the floor on the outer perimeter of the opening curb
- Using 16cc nails and construction adhesive, install the 2" x 6" pressure-treated floor joist on 16" centers; joist ends shall bear on the top of the concrete curb and flush with the top of the rim joist
- Cover the frame with 3/4" UL-Rated Flame Retardant plywood using 8cc nails and construction adhesive.
- Apply 2 coats of Kilz2 or equivalent paint to the structure, or cover the entire structure with a 90-mil EDPM or PVC sheet roofing material.

5.3.2 Referring to Attachment 8.2, INSTALL the isolation barrier on the 30" x 32" opening as follows:

- Remove the ladder, handrail & chains.
- Using 16cc nails and construction adhesive, construct a 2" x 4" pressure-treated wood frame to fit inside the ladder opening (slightly smaller than 30" x 32").
- Cut (3) pieces of 3/4" UO-Rated Flame Retardant plywood to 36" x 36"
- Using 8cc nails and construction adhesive, attach (1) piece of the plywood to the 2" x 4" wood frame; center the frame on the plywood.
- Using 1-1/2" drywall screws and construction adhesive, attach the remaining (2) pieces of 36" x 36" plywood to the first to triple the thickness (2-1/4" nom.).
- Apply 2 coats of Kilz2 or equivalent paint to the structure
- Install the cover in the ladder opening; seal the cover to the floor using GE sealant or equivalent.

5.3.3 Isolate all other openings in the floor (el. 109') using expandable pipe plugs or equivalent devices.

5.4 Inspection

5.4.1 The Field Engineer and the ES&H Coordinator shall conduct and inspection of the Canal and Water Treatment Houses after all work has been completed to verify that no non-radiological personnel hazards (sharp corners, tripping hazards, etc.) exist as a result of equipment removal. Any such hazards that exist shall be mitigated or clearly identified to prevent personnel injury.

6.0 RECORDS

File the Work Package and all supporting data and documentation in accordance with Reference 7.2.

7.0 REFERENCES

7.1 ERD-OPM-1.0, Procedure Development Requirements.

7.2 ERD-OPM-4.5, Implementation, Control, and Configuration Management For BGRR Decommissioning Project Work Activities.

7.3 ERD-OPM-4.6, Hazardous Materials Analysis for BGRR Decommissioning Activities.

7.4 BNL Radiological Control Manual.

7.9 USID/SE BGRR-SE-01-01.

Drawings

C-709-1A, 2A, 3A
M-709-5A

8.0 ATTACHMENTS

8.1 Checklist for Removal of Abandoned Equipment & Components

8.2 Details for Isolation of the Above from the Below Grade Portions of the Canal

9.0 DEFINITIONS/ACRONYMS

ACM	Asbestos-Containing Material
BGRR-DP	Brookhaven Graphite Research Reactor Decommissioning Project
ESH&Q	Environment, Safety, Health and Quality

Attachment 8.1

Checklist for Removal of Abandoned Equipment & Components

Page __ of ___

(Duplicate this form as necessary)

Item No.	Description	Power/Energy Source Isolated	Rad Survey	Haz Assessment	Initial/Date

Attachment 8.2

Details for Isolation of the Above from the Below Grade Portions of the Canal House

Page 1 of 2

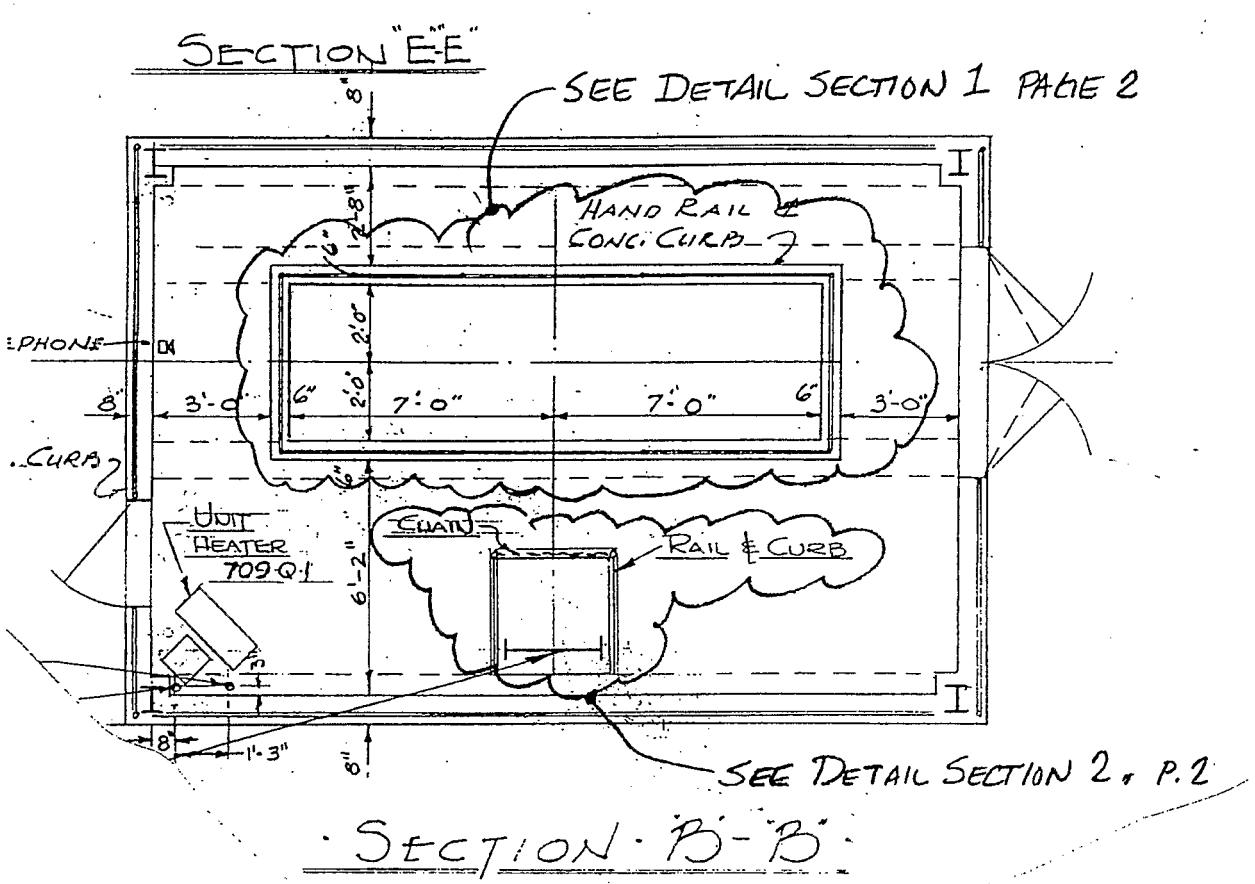

Section 'B-B' from Dwg. M-709-5A
See Page 2 of this Attachment for Details

Attachment 8.2

Details for Isolation of the Above from the Below Grade Portions of the Canal House

Page 2 of 2

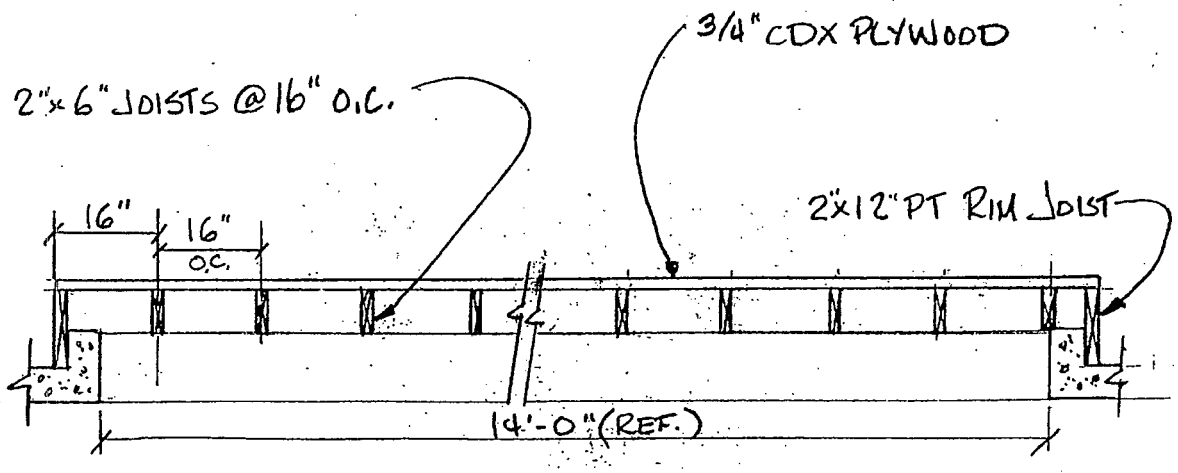

DETAIL SECTION 1
COVER FOR CANAL HATCH

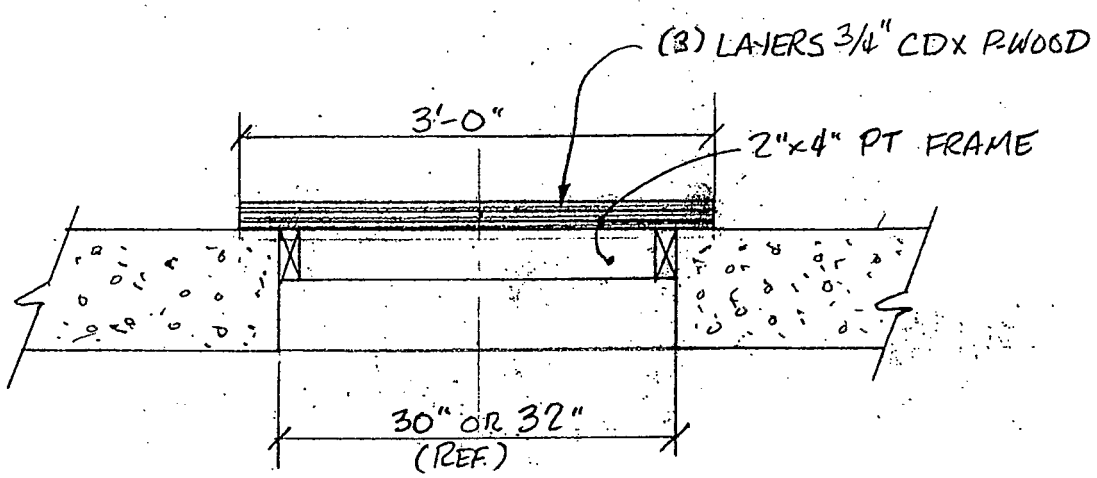

DETAIL SECTION 2
COVER FOR LADDER OPENING

ERD Operations Procedures Manual

TECHNICAL WORK DOCUMENT

DEMOLITION OF THE CANAL AND WATER TREATMENT HOUSES

Text Pages 1 through 12
Attachment: 8.1

Temporary Procedure

Approved: _____ Date: 3/5/01
Walter Lieneck, Manager
BGRR Decommissioning Project

Preparer: **T. Jernigan**

Expiration Date: **December 31, 2001**

ERD OPM No.: **ERD-BGRR-TP-01-02, Rev. 0**

1.0 PURPOSE AND SCOPE

1.1 The purpose of this procedure is to provide the detailed work instructions for the demolition of the above-grade portions of the Canal House (Building 709) and Water Treatment House (Building 709A).

1.2 The scope of the work activities prescribed herein includes the following:

- Erection of the Canal Service Building (CSB)
- Removal and disposal of the built-up roof system on the Canal and Water Treatment Houses and removal of the roof ventilators
- Removal and disposal of the asbestos-containing material (ACM) siding and roof covering on the Canal and Water Treatment Houses and the Canal House shed steel superstructure
- Demolition and disposal of the Concrete Masonry Unit (CMU) walls of the Water Treatment House and the concrete roof slabs
- Demolition and disposal of the steel superstructure of the Canal House

1.3 Prior to commencement of the work activities prescribed herein, the work prescribed by Technical Work Document ERD-BGRR-TP-01-01 will have prepared the Canal and Water Treatment Houses for safe demolition.

1.4 The work activities prescribed herein are performed by BNL contractors qualified to perform certain specialized activities such as asbestos abatement, personnel assigned to the BGRR Decommissioning Project (BGRR-DP), and BNL Plant Engineering personnel.

2.0 RESPONSIBILITIES

2.1 The BGRR-DP Construction Manager or designee is responsible for the proper execution of this Work Document.

2.2 The BGRR-DP Field Engineer (FE) is responsible for direction of all field work activities prescribed in this Work Document including the oversight of outside contractors, BGRR-DP and BNL personnel to ensure both contractual compliance and compliance with BNL work policies and procedures.

2.3 The BGRR-DP Project Engineer or designee is responsible for the technical content of this Work Document.

2.4 The Environmental Restoration Division (ERD) ES&H Manager (ESH) or designee is responsible for the assessment of environment, safety and health issues associated with the work activities delineated herein.

2.5 The BGRR-DP Facility Support (FS) Representative is responsible for implementation of the requirements of the BNL RadCon Manual through the Institutional and Facility Support RadCon procedures.

2.6 The ESH Coordinator and the FE are responsible to analyze the non-radiological hazards associated with the work through implementation of ERD-OPM-4.6, Hazard Materials Assessment, Analysis, and Mitigation for BGRR Decommissioning Activities.

2.7 The ERD Quality Representative is responsible to ensure the ERD Quality Assurance Guidelines are incorporated into the planning process, and review of the Task Quality Plan for the work activities prescribed herein per Ref. 7.2.

2.8 The Waste Management Representative (WMR) is responsible for identification of appropriate waste containers and/or packaging, determination of waste disposal pathways, and required sampling for waste disposal.

2.9 The Subcontract Technical Representative (STR) is responsible to ensure compliance with the technical requirements of the individual contracts.

3.0 PREREQUISITES

3.1 A task-specific Job Safety Analysis (JSA) for this work activity has been approved and reviewed by all personnel involved with these work activities.

FE Initial: _____ Date: _____

3.2 The Unreviewed Safety Issue Determination/Safety Evaluation (USID/SE) USID/SE BGRR-SE-01-01 has been approved.

FE Initial:_____ Date: _____

3.3 A Radiological Work Permit (RWP) is required for the work activities prescribed in each section. The radiological hazards involved in the demolition activities shall be evaluated and addressed in the RWP. Verification sign-off is provided in each section.

3.4 A Hazardous Materials Assessment has been completed in accordance with Ref. 7.3 for all of the work areas covered in this procedure, and all identified hazardous materials have been removed or stabilized to ensure a safe working environment.

ESH Initial: _____ Date: _____

3.5 Waste disposal container(s) and/or packaging available for radiological and hazardous items removed during these work activities.

FE Initial: _____ Date: _____

3.6 Demolition preparation activities have been completed in accordance with Technical Work Document ERD-BGRR-TP-01-01, De-energize, Stabilize and Remove Abandoned Equipment From the Canal and Water Treatment.

FE Initial: _____ Date: _____

3.7 An engineering survey of the planned demolition of the Canal and Water Treatment Houses has been performed to ensure that there will be no unplanned collapse of any portion of the structure, and this survey is documented in separate Work Instruction and a copy provided in this work package (Blue Book).

FE Initial: _____ Date: _____

4.0 PRECAUTIONS AND LIMITATIONS

4.1 This document is a TEMPORARY procedure valid only for the specific work activities delineated in **Section 5.0**, and may only be implemented in conjunction with an approved Work Permit, and other approved appropriate documents and permits (e.g., RWP) as stated on and attached to the implementing Work Permit.

4.2 The internal surfaces of the buildings and the contents therein are contaminated with radionuclides such as Co-60, Cs-137, Sr-90, Am-241, Pu-239, and others.

4.3 Both the JSA and USID/SE are based on NO FLAME CUTTING of components that are known or suspected to be radiologically contaminated. If it is later determined that such flame cutting is required, both of these documents shall be revised. Revision of the USID/SE requires DOE approval.

4.4 Flame cutting of components which have been surveyed and verified not to be radiologically contaminated is allowed.

4.5 Tools and equipment used to implement the demolition activities shall be selected based on the effectiveness in accomplishing the task while minimizing the workers exposure to both radiological and non-radiological hazards, and release of such hazardous substances to the environment. Prior to determining the methods and equipment utilized, the FE, ESH Coordinator, and the FS Representative shall evaluate and agree upon these methods.

4.6 No power-operated equipment such as rotary grinders, wire brushes, or power-washers shall be used for decontamination of components. Methods for decontamination shall be limited to use of masslin wipes, abrasive pads, hand-held wire brushes, and approved liquid cleaners.

5.0 PROCEDURE

5.1 Erection of the Canal Service Building (CSB)

NOTE 1: *The CSB will be purchased from a manufacturer and assembled by BNL workers.*

NOTE 2: *The CSB is not required to perform the work prescribed in Sections 5.2 and 5.3*

5.1.1 A RWP has been issued for this section:

RWP No:_____ FE Initial:_____ Date: _____

5.1.2 The JSA has been reviewed to verify that no additional hazards may exist due to changing field conditions of configuration.

FE Initial: _____ Date: _____

ESH Coordinator: _____ Date: _____

5.1.3 Verify Sections 5.2 and 5.3 completed to the extent that erection of the CSB will not interfere with the work completion

FE Initial: _____ Date: _____

5.1.4 Erect the CSB in accordance with the manufacturer's instructions.

5.1.5 The FE shall verify that the CSB has been erected in accordance with the specifications supplied by the manufacturer.

FE Initial: _____ Date: _____

5.1.6 Verify that the CSB temporary ventilation system is installed and operational.

FE Initial: _____ Date: _____

5.2 Removal of Built-up Roofing System from the Canal and Water Treatment Houses

NOTE 3: *A qualified BNL Contractor will remove the built-up roofing system from the Canal and the Water Treatment Houses. The scope of this work is limited to the removal of the roofing materials and does not include the concrete roof slab.*

5.2.1 A RWP has been issued for this section:

RWP No:_____ FE Initial:_____ Date: _____

5.2.2 The JSA has been reviewed to verify that no additional hazards may exist due to changing field conditions of configuration.

FE Initial: _____ Date: _____

ESH Coordinator: _____ Date: _____

5.2.3 Verify that waste container(s) available to accept the material removed from the Canal and Water Treatment Houses.

FE Initial: _____ Date: _____

5.2.4 Verify the roofing material removed from the Canal and Water Treatment Houses and placed into proper waste containers in accordance with the specifications in the BNL contract for roofing material removal.

FE Initial (Canal House): _____ Date: _____

FE Initial (Water Treatment House): _____ Date: _____

5.2.5 Install covers over the roof vent openings per Attachment 8.1 and seal the concrete roof slab to prevent any water intrusion with approved cold roofing sealant and sheet roofing membrane.

FE Initial (Canal House): _____ Date: _____

FE Initial (Water Treatment House): _____ Date: _____

5.3 Demolition of the Canal House Shed Roof & External Steel Structure

Note: *A qualified BNL Contractor will remove the ACM roofing system from the Canal House shed roof. The scope of this work is limited to the removal of the roofing materials and does not include the steel superstructure.*

5.3.1 A RWP has been issued for this section:

RWP No:_____ FE Initial:_____ Date: _____

5.3.2 The JSA has been reviewed to verify that no additional hazards may exist due to changing field conditions of configuration.

FE Initial: _____ Date: _____

ESH Coordinator: _____ Date: _____

5.3.3 Direct the BNL contractor to remove the ACM roofing material from the Canal House shed roof.

5.3.4 Provide appropriate documentation from qualified BNL contractor verifying that all ACM roofing material was removed and placed into proper waste containers.

FE Initial: _____ Date: _____

5.3.5 Demolish the external steel superstructures including the monorail crane and supports, shed roof superstructure, and all other external steelwork and place into proper containers.

5.3.6 Verify that all material removed and placed into proper waste containers.

FE Initial: _____ Date: _____

5.4 Demolition and Disposal of the CMU Walls and Roof Slabs of the Water Treatment House

5.4.1 A RWP has been issued for this section:

RWP No:_____ FE Initial:_____ Date: _____

5.4.2 The JSA has been reviewed to verify that no additional hazards may exist due to changing field conditions of configuration.

FE Initial: _____ Date: _____

ESH Coordinator: _____ Date: _____

5.4.3 Verify that waste container(s) available to accept the material removed from the Water Treatment House.

FE Initial: _____ Date: _____

5.4.4 Remove the windows and doors from the Water Treatment House and place in the proper container.

5.4.5 Remove the 2-inch-thick pre-cast roof slabs and place into proper containers.

5.4.6 Demolish the 8-inch-thick CMU walls, placing all waste into proper containers.

5.2.7 Verify all material removed from the Water Treatment House and placed into proper waste containers.

FE Initial: _____ Date: _____

5.5 Demolition of the ACM Siding from the Canal House

NOTE 4: *A qualified BNL Contractor will remove the ACM siding from the Canal House. The scope of this work is limited to the removal of the siding and roofing materials and does not include the steel superstructure.*

5.5.1 A RWP has been issued for this section:

RWP No:_____ FE Initial:_____ Date: _____

5.5.2 The JSA has been reviewed to verify that no additional hazards may exist due to changing field conditions of configuration.

FE Initial: _____ Date: _____

ESH Coordinator: _____ Date: _____

5.5.3 Verify that waste container(s) available to accept the siding removed from the Canal and Water Treatment Houses.

FE Initial: _____ Date: _____

5.5.4 Remove the windows and doors from the Canal House and place into proper containers.

5.5.5 Direct the BNL contractor to remove the ACM siding from the Canal House.

5.5.6 Verify all ACM siding material removed from the Canal House and placed into proper waste containers in accordance with the specifications.

FE Initial: _____ Date: _____

5.6 Demolition and Disposal of the Canal and Water Treatment Houses Steel Superstructures

CAUTION 1 : No flame cutting of components, which are known or suspected to be radiologically contaminated is permitted. Flame cutting could result in the release of radioactive contaminants into the air.

5.6.1 A RWP has been issued for this section:

RWP No:_____ FE Initial:_____ Date: _____

5.6.2 The JSA has been reviewed to verify that no additional hazards may exist due to changing field conditions of configuration.

FE Initial: _____ Date: _____

ESH Coordinator: _____ Date: _____

5.6.3 Verify that waste container(s) available to accept the steel removed from the Canal and Water Treatment Houses.

FE Initial: _____ Date: _____

5.6.4 Demolish the steel superstructure and place the waste steel into proper containers for disposal.

5.7 Final Inspection at Completion of Work

5.7.1 The FE and the ES&H Coordinator shall inspect all areas of work to ensure no personnel safety hazards exists.

FE Initial: _____ Date: _____

ESH Initial: _____ Date: _____

5.7.2 Perform a radiological survey of the completed work area to ensure no radiological hazards exist. If necessary, perform remedial decontamination or fixative application, or post the areas as required per BNL RadCon procedures.

FE Initial: _____ Date: _____

FS Initial: _____ Date: _____

6.0 RECORDS

File the Work Package and all supporting data and documentation in accordance with Reference 7.2.

7.0 REFERENCES

7.1 ERD-OPM-1.0, Procedure Development Requirements.

7.2 ERD-OPM-4.5, Implementation, Control, and Configuration Management For BGRR Decommissioning Project Work Activities

7.3 ERD-OPM-4.6, Hazardous Materials Assessment, Analysis, and Mitigation for BGRR Decommissioning Activities

7.4 BNL Radiological Control Manual

7.5 USID/SE BGRR-SE-01-01

7.6 Technical Work Document ERD-BGRR-TP-01-01, De-energize, Stabilize & Remove Abandoned Equipment From the Canal and Water Treatment Houses

Drawings

C-709-1A, 2A, 3A
M-709-5A

8.0 ATTACHMENTS

8.1 Details for Covering Openings in Roof

9.0 DEFINITIONS/ACRONYMS

ACM	Asbestos Containing Material
BGRR-DP	Brookhaven Graphite Research Reactor Decommissioning Project
CMU	Concrete Masonry Unit (concrete block)
CSB	Canal Service Building
ERD	Environmental Restoration Division
ESH&Q	Environment, Safety, Health and Quality
FE	Field Engineer
FS	Facility Support
JSA	Job Safety Analysis
RWP	Radiological Work Permit
STR	Subcontractor Technical Representative
USID-SE	Unidentified Safety Issue Determination - Safety Evaluation
WMR	Waste Management Representative

Attachment 8.1

Details for Covering Openings in Roof

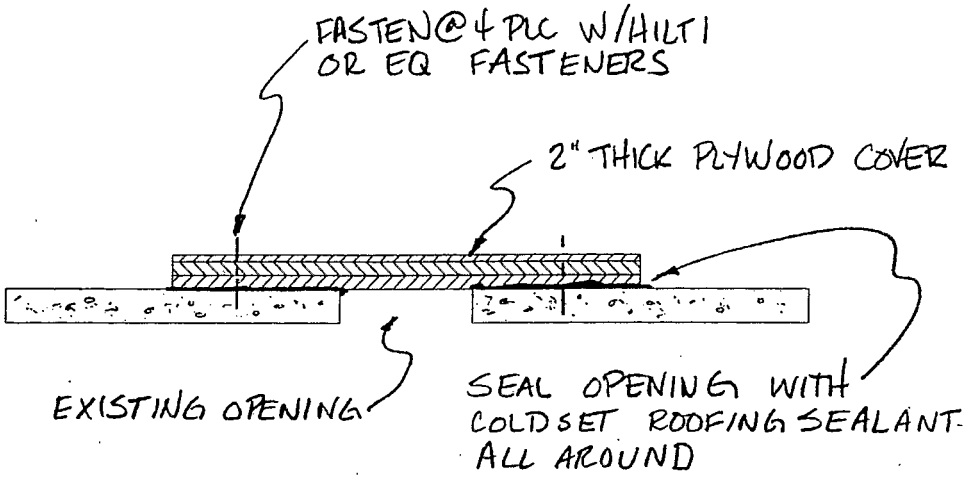

DETAIL

ROOF OPENING COVERS

NOTES:

1. PLYWOOD COVER SHALL EXTEND A MINIMUM OF 6" AROUND THE OPENING ON ALL SIDES.

2. THE PLYWOOD COVER SHALL CONSIST OF (3) SHEETS OF CDX PLYWOOD TO RENDER A NOMINAL THICKNESS OF 2". EACH SHEET SHALL BE BONDED TO THE OTHER WITH CONSTRUCTION ADHESIVE (LIQUID NAILS OR EQ.)