BGRR-046

ACTION MEMORANDUM
BROOKHAVEN GRAPHITE RESEARCH REACTOR COOLERS AND FILTERS REMOVAL ACTION

December 27, 2001

Brookhaven National Laboratory
Brookhaven Science Associates
Under Contract No. DE-AC0-2-98CH01886 with the
United States Department of Energy

TABLE OF CONTENTS

LIST OF FIGURES iii

ACRONYMS, ABBREVIATIONS, AND UNITS OF MEASURE iv

I. PURPOSE 1

II. SITE CONDITIONS AND BACKGROUND 1

- A. Site Description 1
  - 1. Physical Location 1
  - 2. Removal Site Evaluation 3
  - 3. Release or Threat of Release into the Environment of a Hazardous Substance, Pollutant, or Contaminant 9
- B. Actions to Date 10
  - 1. Previous Actions 10
  - 2. Current Actions 10
  - 3. Planned Actions 11
- C. National Priorities List Status 11

III. THREATS TO PUBLIC HEALTH OR WELFARE AND THE ENVIRONMENT: STATUTORY AND REGULATORY AUTHORITIES 11

- A. Threats to Public Health or Welfare 11
- B. Threats to the Environment 12

IV. DETERMINATION OF ENDANGERMENT 12

V. PROPOSED ACTION AND ESTIMATED COSTS 12

- A. Proposed Action 12
- B. Contribution to the Remedial Performance 12
- C. Description of Alternative Technologies 12
- D. Applicable or Relevant and Appropriate Requirements 13
  - 1. Chemical-Specific ARARs 13
  - 2. Location-Specific ARARs 13
  - 3. Action-Specific ARARs 13
  - 4. To-be-considered Guidance 14
- E. Project Schedule 14
- F. Estimated Costs 14

VI. EXPECTED CHANGE IN THE SITUATION SHOULD ACTION BE DELAYED OR NOT TAKEN 14

VII. PUBLIC PARTICIPATION 15

VIII. OUTSTANDING POLICY ISSUES 15

IX. ENFORCEMENT 15

X. RECOMMENDATION 15

XI. REFERENCES 15

LIST OF FIGURES

Figure 1 Location of Brookhaven National Laboratory 2

Figure 2 Location of BGRR on Brookhaven National Laboratory site..... 2

Figure 3. Below Ground Exhaust Air-Cooling System Location of Coolers and Filters (Plan View) 3

Figure 4. Below Ground Exhaust Air-Cooling System Location of Filters and Coolers (Elevation) 4

Figure 5. Cooler Coils Middle Section (South Bank)..... 5

Figure 6. Typical Filter Bank – Elevation..... 7

Figure 7. Filter Banks (Plan View)..... 8

ACRONYMS, ABBREVIATIONS, AND UNITS OF MEASURE

AOC	Area of Concern
ARAR	Applicable or Relevant and Appropriate Requirement
BGRR	Brookhaven Graphite Research Reactor
BNL	Brookhaven National Laboratory
CERCLA	*Comprehensive Environmental Response, Compensation and Liability Act* of 1980
CFR	Code of Federal Regulations
DOE	U.S. Department of Energy
EPA	U.S. Environmental Protection Agency
NYCRR	New York Codes, Rules and Regulations
NYSDEC	New York State Department of Environmental Conservation
OSWER	Office of Solid Waste and Emergency Response
RCRA	*Resource Conservation and Recovery Act*
ROD	Record of Decision
SAP	sampling and analysis plan
TBC	to be considered

I. PURPOSE

The purpose of this Action Memorandum is to document the decision by the U.S. Department of Energy (DOE) to conduct a time-critical removal action to remove the exhaust air Coolers and Filters of the Brookhaven Graphite Research Reactor (BGRR) at Brookhaven National Laboratory (BNL). The Coolers and Filters are part of Area of Concern (AOC) 9, specifically 9A.

This action is being undertaken as a time-critical removal action in accordance with the Interagency Agreement among the DOE, the U.S. Environmental Protection Agency (EPA), and the New York State Department of Environmental Conservation (NYSDEC) [1]. This action will be documented in the BGRR Record of Decision (ROD). Work will be conducted in accordance with the National Contingency Plan [2].

II. SITE CONDITIONS AND BACKGROUND

A. Site Description

1. Physical Location

Brookhaven National Laboratory is located near the geographic center of Suffolk County on Long Island, New York in the Town of Brookhaven (Figure 1). The present site contains 5,265 acres, of which 75 percent are wooded. The remainder is developed and contains office buildings, various large research facilities, parking lots, and other facilities. The BGRR and its exhaust air Coolers and Filters are located in the central section of the BNL property as shown in Figure 2. The below ground exhaust air-cooling system and the location of the Coolers and Filters is shown in Figure 3 (plan view), and in Figure 4 (elevation).

The BNL site, formerly Camp Upton, was occupied by the U.S. Army during World Wars I and II, and was subsequently transferred to the Atomic Energy Commission in 1947 for use as a national laboratory. Brookhaven National Laboratory carries out basic and applied research in the fields of high-energy nuclear and solid-state physics, fundamental material and structure properties and the interaction of matter, nuclear medicine, biomedical and environmental sciences, and selected energy technologies. Major operating facilities include the Relativistic Heavy Ion Collider, the National Synchrotron Light Source and the Alternating Gradient Synchrotron. Brookhaven National Laboratory is a government-owned, contractor-operated facility of the DOE, and is operated and managed by Brookhaven Science Associates under contract to DOE.

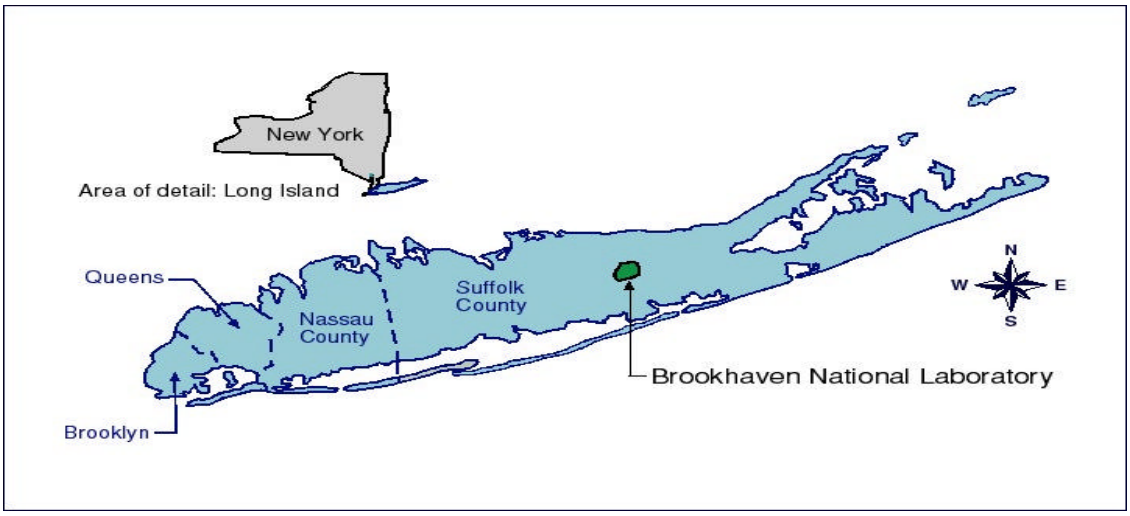

Figure 1. Location of Brookhaven National Laboratory

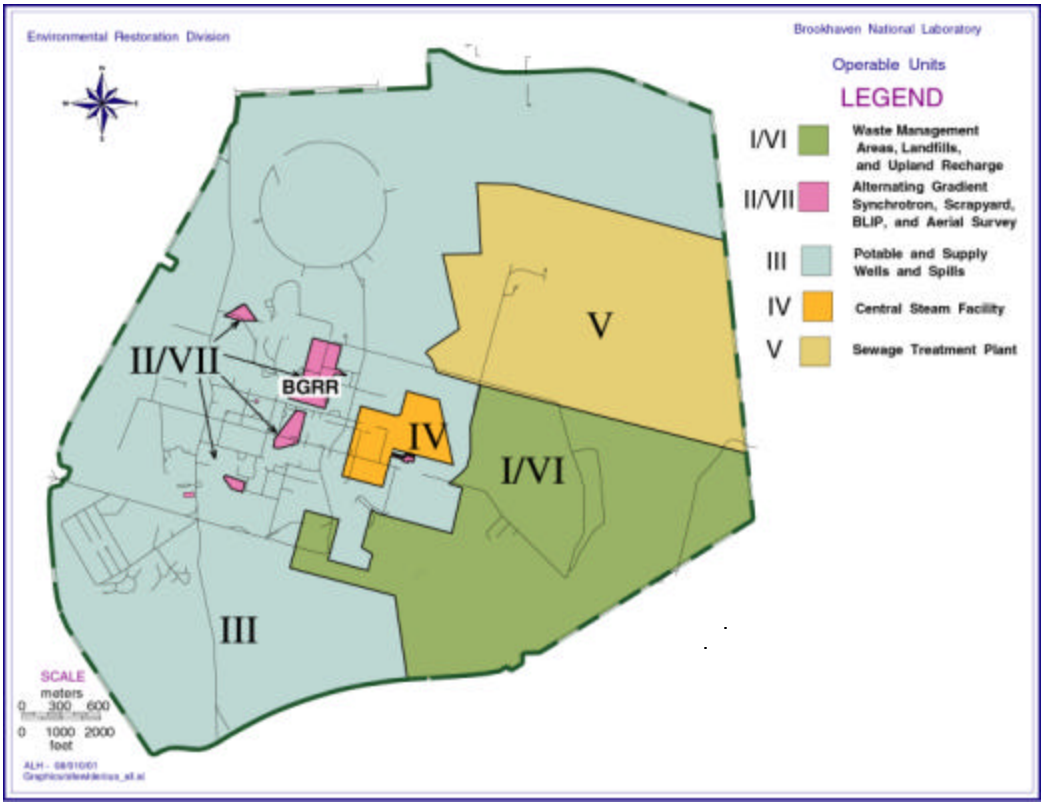

Figure 2. Location of BGRR on Brookhaven National Laboratory site

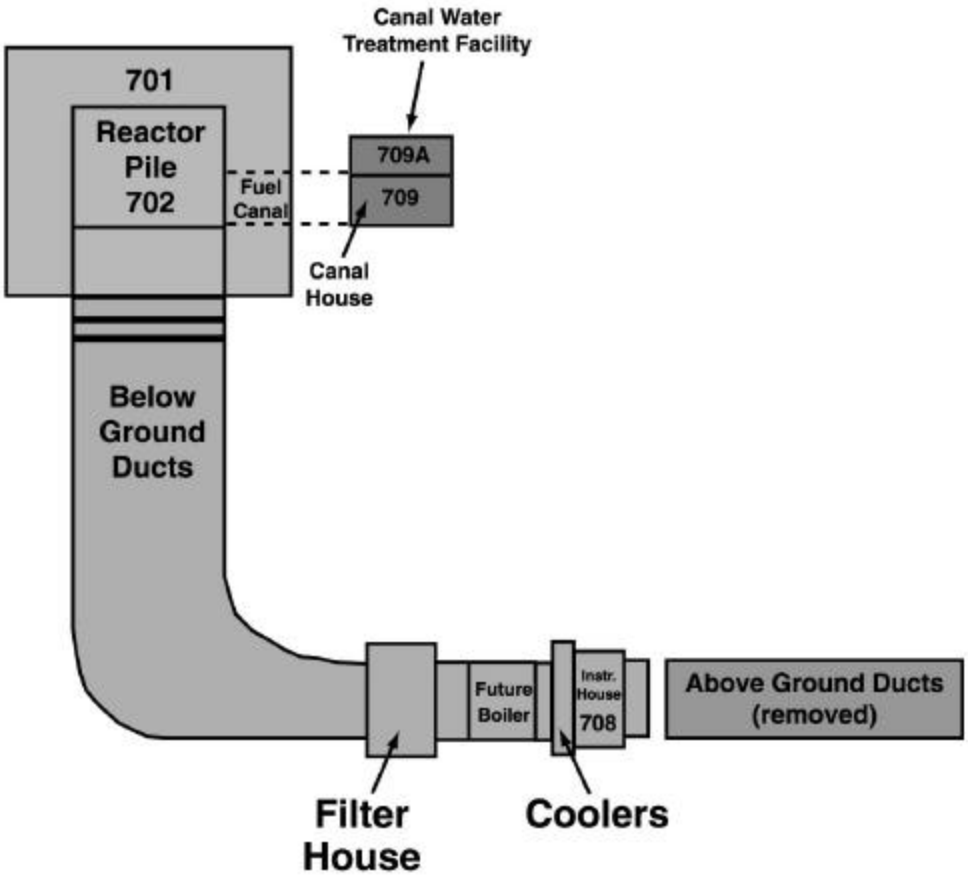

Figure 3. Below Ground Exhaust Air-Cooling System Location of Coolers and Filters (Plan View)

2. Removal Site Evaluation

The BGRR operated from 1950 until 1968. It was fueled with natural uranium from 1950 through April 1958, and with enriched uranium until ultimate shutdown. During this period there were twenty-eight reported ruptured fuel cartridges. These fuel failures led to the contamination of the cooling system and its components, including the Coolers and Filters.

a. Physical Description

The layout of the BGRR air-cooling system is shown in Figures 3 and 4. The following is a summary of physical information and current conditions of the Coolers and Filters.

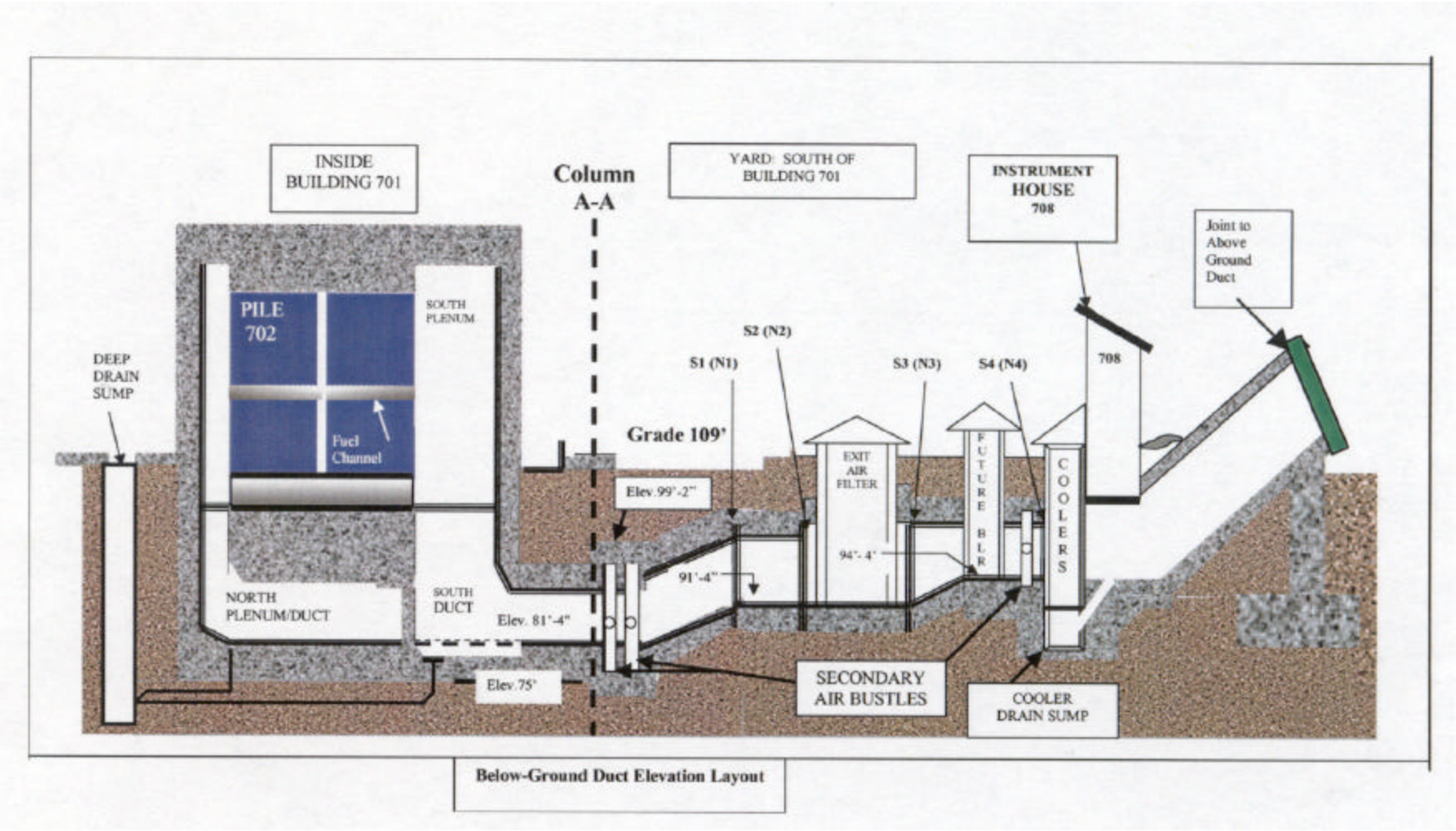

Figure 4. Below Ground Exhaust Air-Cooling System Location of Filters and Coolers (Elevation)

b. Coolers

The Coolers are located in the underground part of the north and south ducts, downstream of the Filters. There are a total of twelve Cooler banks; each duct contains six Cooler banks. The Coolers were replaced once during the early pile operations due to excessive chilled water leakage. Each Cooler bank is about 3 feet wide, 2 feet deep, and about 10 feet high as shown in Figure 5. Each bank is connected by two 4-inch-diameter carbon steel lines (supply and return) and one 1-inch-diameter carbon steel drain line. The finned tube Coolers are primarily made of copper tube, 0.5 inches in diameter and 0.049 inches wall thickness with finned material that was tinned with lead. The overall finned material outside diameter is 1.5 inches. Each duct section at the Cooler banks location is about 18.75 feet wide and about 10.5 feet high.

The Cooler banks in each duct are accessible via (a) the ten concrete cover plugs which are located on top of the Cooler housing, and via the air-cooling duct openings (above ground) downstream of the Coolers, and (b) from the east end of the Below Ground Duct opening, which was connected to the Above Ground Duct sections which were removed in early 2001. The visual inspection of the Coolers in May 2000 revealed degraded frame conditions and questionable structural integrity.

c. Filters

The exhaust air Filter housing is located in the below ground ducts upstream of the Cooler housing. The overall assembly of the Filter banks is shown in Figure 6 (elevation). Each Filter cell consists of a box-like frame with a removal cover and is normally 2 feet square by 4 inches deep. This frame contains about 30 square feet of Filter media arranged in 4-inch deep narrow "Vs" formed by wire mesh screens, which confine the Filter media on both sides. The Filter cells were permanently welded together to form panels of ten Filter cells each, 2 cells high by 10 feet wide by 4 inches deep. Each Filter panel weighs about 450 pounds. A total of 32 panels composing 320 Filters were placed in each duct. At the Filter housing location, the ducts are about 18.75 feet wide and 16 feet high. The Filters are accessible through removable concrete slabs, which form the roof of the Filter well.

Each Filter bank in plan consists of four deep V sections spanning the width of the duct, with the Vs aligned parallel to the airflow, as shown in Figure 7. A removable frame, containing the Filter panels, which is clamped and sealed against a permanent frame within the Filter well, forms each leg of a V. The eight removable frames make up the Filter installation for each duct. A wedge-shaped removable concrete slab is located over each removable frame.

Each removable frame is rectangular in shape and is divided into four 4-feet x 10-feet horizontal sections to accommodate the Filter panels. The frames are of welded construction and are made up of 4-inch I-beams. The upstream side of each section is provided with a continuous flange bolted to the flanges of the I-beam frame and supporting an asbestos tape gasket, which forms an air seal between the Filter panels and the removable frame. The Filter panels are locked in place on downstream side by dog-type clamps, which bear upon the Filter panels and load the Filter panel seal gasket. The removable frames are clamped against the permanent frames by a cam locking device acting upon the vertical legs of the removable frames. The permanent frames are

Figure 5. Cooler Coils Middle Section (South Bank)

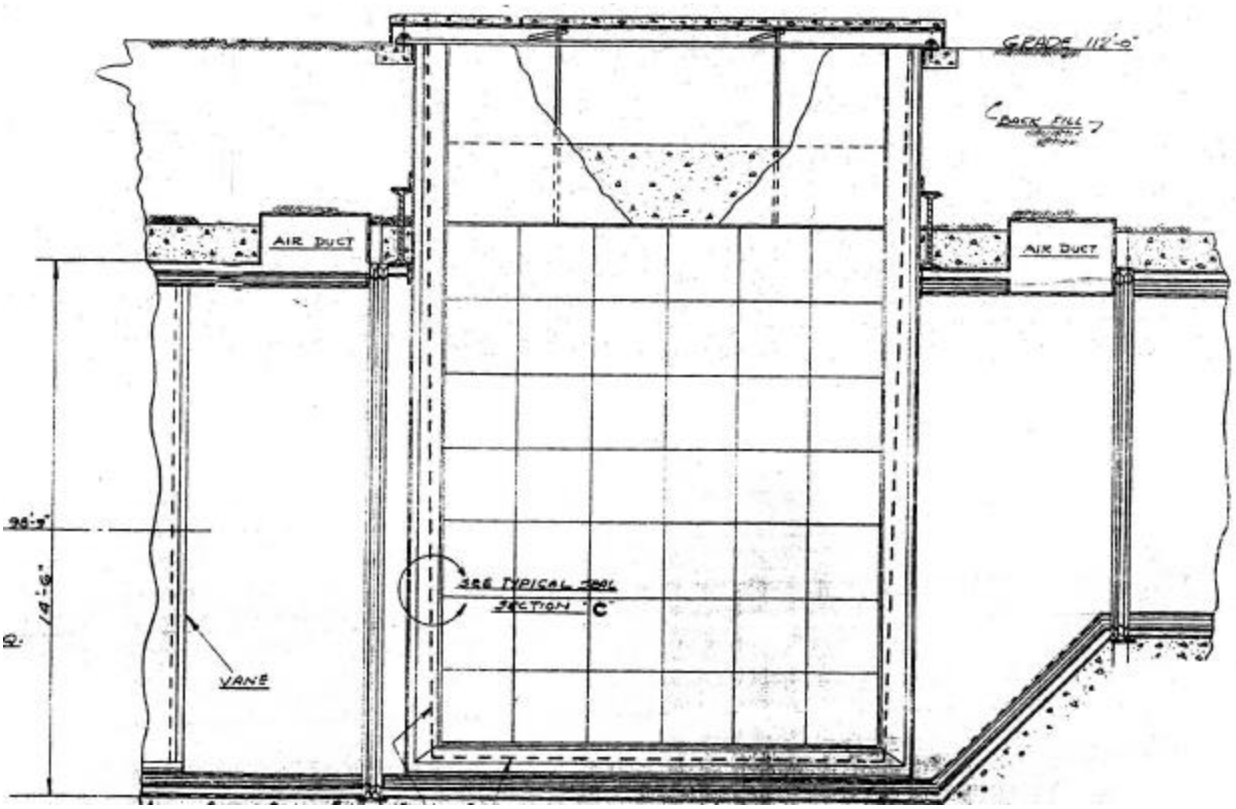

Figure 6. Typical Filter Bank - Elevation

Partial section (taken from DWG. M-708-37A)

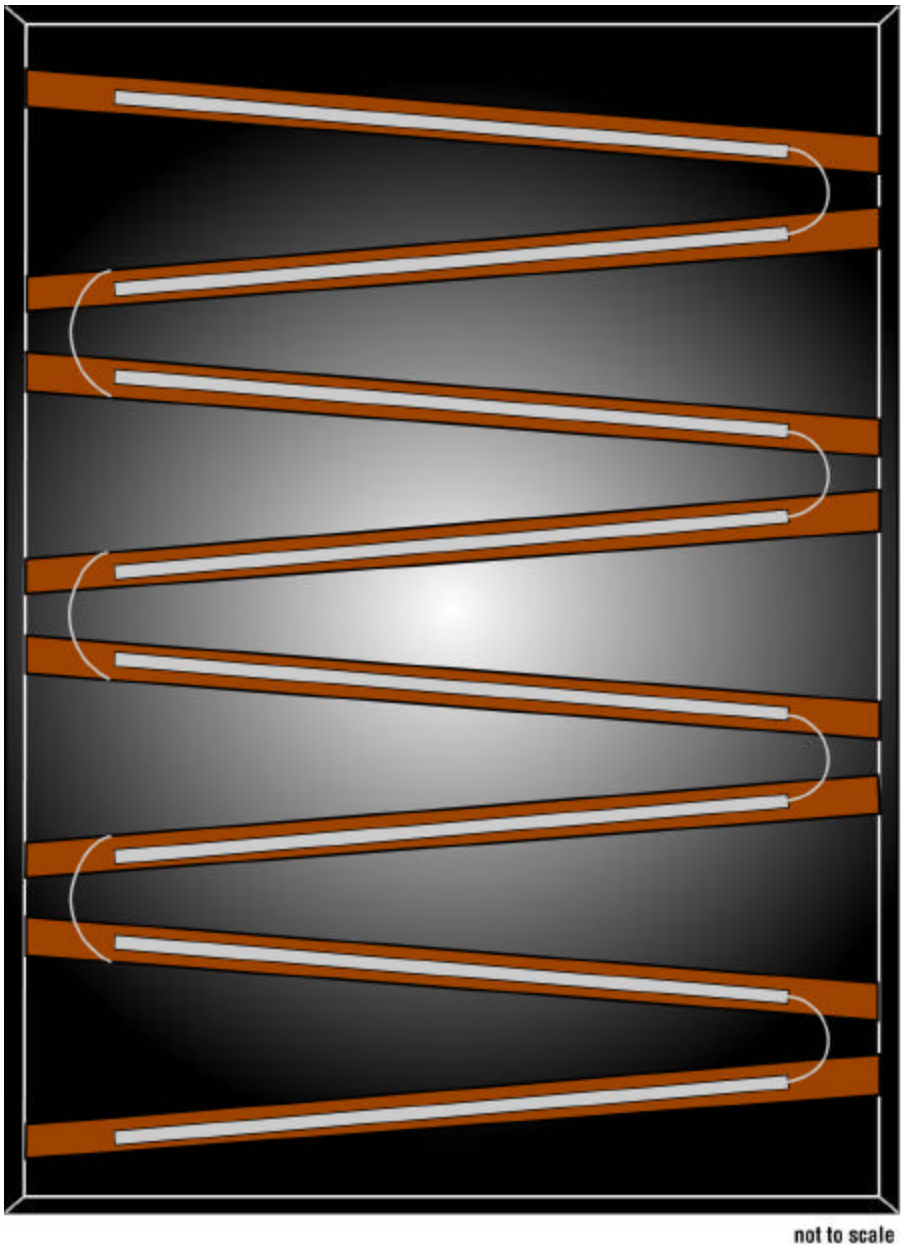

Figure 7. Filter Banks (Plan View)

formed on the top and bottom by channels, which are welded to steel angles forming the sides of the frame. A second set of channels are set parallel to the channels forming the top of the permanent frames to form rectangular slots providing access to the removable frames.

Based on a video-camera inspection of the Filter banks conducted in May 2000, the Filters are in highly degraded condition and the frames are grossly corroded. The structural integrity of the frames and the Filters is highly questionable. The Filter mesh material is fragile and could readily disintegrate with minimal disturbance. Significant amounts of rust and debris have accumulated in the V traps.

d. Analytical Data

In 2000, the BGRR Decommissioning Project took samples from the Coolers and Filters for purposes of identifying both radiological and hazardous material constituents.

The radionuclide-specific concentration in the Coolers ranged from 6.15 picoCuries gram (Plutonium-238) to 4.75 nanoCuries per gram (Cesium-137). The results indicated that Cesium-137 comprised over 97 percent of the total radioactivity. Additionally, lead was detected in a concentration of 310 milligrams per liter.

The radionuclide-specific concentration in the Filters ranged from 0.33 nanoCuries per gram (Cobalt-60) to 3.62 microCuries per gram (Cesium-137). The results indicated that Cesium-137 comprised over 97 percent of the total radioactivity.

3. Release or Threat of Release into the Environment of a Hazardous Substance, Pollutant, or Contaminant

a. Coolers

Analysis performed on the Cooler samples indicates that the Coolers are radiologically contaminated and the fins of the Coolers contain leachable lead (310 milligrams per liter), which is greater than the *Resource Conservation and Recovery Act* (RCRA) limit (5 milligrams per liter) for lead. In addition, radiological surveys indicate that the Coolers have a maximum dose rate of 20 milliRoentgen per hour. Stagnant water has been found in the past at the Cooler drain sumps inside the ducts and has since been removed. The drain sumps are currently monitored for water intrusion.

Based on the above, the Coolers pose a threat of release of hazardous and radiological contaminants to the environment and warrant expeditious removal from the ducts.

b. Filters

The original Filters installed at the beginning of the BGRR operation have never been removed or replaced. Visual inspection of the Filter banks in May 2000 indicates that the Filters are in highly degraded condition and the frames are grossly corroded. The structural integrity of the Filters and

frames is highly suspect. Sampling and analysis conducted in May 2000 indicate that the Filters are highly contaminated and the radiological survey indicates that the dose rates are in the order of 750 milliRoentgen per hour. Water has been found inside the ducts and has since been removed. The integrity of duct expansion joints is believed to be compromised based on video inspection of the outer expansion joint surfaces (September 2001) during the ongoing environmental sampling and analysis (Below Ground Duct sampling and analysis plan [SAP] implementation activities). These deteriorated expansion joints provide a pathway for the radiological contamination to be released to the environment. Asbestos is also present in the form of caulking that was used to seal the Filter frame to the Filter housing.

Based on the above, the Filters pose a threat of release of hazardous and radiological contaminants to the environment and warrant expeditious removal from the ducts.

B. Actions to Date

1. Previous Actions

- The Coolers and Filters are continuously maintained under negative pressure by operation of the 3,000 cubic feet per minute high-efficiency particulate-air filtration system located in the east intake duct, which also keeps the reactor pile and the ducts under negative pressure.
- The Above Ground Ducts were removed in 2001. Rainwater in-leakage accumulated at the Cooler and Filter locations and in the lower elevation area of the underground ducts.
- The water in the underground ducts was removed in 1998 and currently the low-elevation points in the duct are monitored for any new in-leakage.
- Two galvanized, corrugated steel roofs have been installed on top of the underground ducts sections where the Coolers and Filters are located to prevent further rainwater intrusion into the ducts via gaps in the concrete plugs and/or the expansion joints.
- A visual inspection of the condition of the Coolers and Filters was recorded using a video camera. Sampling and analysis as well as a radiological survey of the Coolers and Filters were performed in May 2000.

2. Current Actions

- The underground ducts are monitored for water intrusion. Any water found is removed.
- The underground ducts (including Coolers and Filters) are maintained under negative pressure.
- Sampling and analysis of the environmental media around the ducts was initiated in August 2001 and is ongoing.

3. Planned Actions

Periodic monitoring and surveillance of the Below Ground Ducts is being implemented. In addition, monitoring of the Below Ground Ducts for water intrusion will continue.

C. National Priorities List Status

Brookhaven National Laboratory was added to the National Priorities List in 1989. An Interagency Agreement under the *Comprehensive Environmental Response, Compensation and Liability Act* (CERCLA), and applicable New York State regulations was negotiated between the DOE, EPA, and NYSDEC. The Interagency Agreement became effective in May 1992 and governs the environmental restoration program at BNL.

III. THREATS TO PUBLIC HEALTH OR WELFARE AND THE ENVIRONMENT: STATUTORY AND REGULATORY AUTHORITIES

A. Threats to Public Health or Welfare

The threats posed by the Coolers and Filters are time-critical based upon:

- Their significant radiological contamination.
- The potential for further release of radiological contamination to soil and groundwater via rainwater intrusion, which has the potential to transport contamination from the Coolers and Filters to a degraded expansion joint.
- The BNL site is located above a sole-source aquifer, as designated by EPA under the *Safe Drinking Water Act*, and groundwater is the primary source of drinking water in the area. The groundwater also is classified by New York State as Class GA under the New York Codes, Rules and Regulations (NYCRR), 6 NYCRR Part 703 [3], the best usage of which is a source of potable-water.
- The potential for airborne release of contamination if the Filters were to collapse, since the structural condition of the Coolers and Filters is highly suspect.

The appropriateness of the removal action is based on two of the eight factors listed in 40 Code of Federal Regulations (CFR) 300.415 (b) (2) [4] of the regulations implementing the National Contingency Plan.

1. Actual or potential exposure to nearby workers, populations, animals or the food chain from hazardous substances, pollutants, or contaminants, and

2. Actual or potential contamination of radiological contamination to drinking-water supplies or sensitive ecosystems.

B. Threats to the Environment

The major threat to the environment is on-site migration of radiological contaminants into surrounding soils and subsequently to groundwater.

IV. DETERMINATION OF ENDANGERMENT

If the actual or threatened releases of pollutants and contaminants from this site are not mitigated by taking the response action selected in this action memorandum, they pose a potential and substantial endangerment to the environment and risk to workers.

V. PROPOSED ACTION AND ESTIMATED COSTS

A. Proposed Action

The proposed action is to remove the BGRR exhaust air Coolers and Filters in their entirety from their locations in the Below Ground Ducts and dispose of them in a licensed facility. This removal action is being undertaken to prevent radiological contamination potentially being released into surrounding soils and groundwater. Performance of a time-critical removal action for this purpose is specifically referred to in the EPA's Office of Solid Waste and Emergency Response (OSWER) Interim Final Guidance on Preparing Superfund Decision Documents Directive 9355.3-02 [5].

B. Contribution to the Remedial Performance

The BGRR was identified in the Interagency Agreement as an AOC, being given the designation AOC 9. In the future, a ROD will be developed to document the final remedy selected. The proposed action addresses radiological and hazardous material source removal, and is therefore consistent with and contributes to the long-term objectives for AOC 9.

C. Description of Alternative Technologies

The opportunity to use the safest and most cost-effective alternative technologies lies in the physical removal and disposal of the Coolers and Filters. The BGRR Decommissioning Project plans to undertake the removal action using BNL and contractor labor resources and dispose of the Filter and Cooler wastes off-site at a licensed waste disposal facility. As an alternative technology, project staff is pursuing the first-time use of the BNL Waste Management Division's box compactor, located in Building 865. If viable, the box compactor will reduce the overall waste disposal volume from the Coolers and/or Filters.

D. Applicable or Relevant and Appropriate Requirements

The National Contingency Plan, Section 300.430 (e)(9)(iii)(B), requires that removal attains the Federal and State Applicable and Relevant and Appropriate Requirements (ARARs) to the extent practicable. The following ARARs apply to this removal action.

1. Chemical-Specific ARARs

The chemical-specific ARARs that the removal action will meet are listed below:

a. 6 NYCRR Part 212 [7], General Process Emission Sources: This State regulation will be followed to determine the need for air-emission control equipment.

b. RCRA (40 Code of Federal Regulations parts 260-268) [8]: These Federal regulations define hazardous wastes. All wastes classified as hazardous will be handled, stored, and disposed of off-site at a permitted facility in accordance with these regulations.

c. New York State Hazardous Waste Regulations (6 NYCRR Part 370 - 373) [9]: These regulations define hazardous wastes in New York State. All wastes classified as hazardous will be handled, stored, and disposed of off-site at a permitted facility in accordance with these regulations.

2. Location-Specific ARARs

No location-specific ARARs were identified.

3. Action-Specific ARARs

The action-specific ARARs that this Removal Action will meet are listed below:

a. 10 Code of Federal Regulations Part 835 [10]: This regulation establishes the requirements for protecting workers by control and management of radiologically contaminated areas at DOE sites.

b. RCRA (40 Code of Federal Regulations parts 260-268): As described above.

c. New York State Hazardous Waste Regulations (6 NYCRR Part 370 - 373): As described above.

d. *Clean Air Act* (42 U.S.C Section 7401, et seq.) [11] and the National Emissions Standards for Hazardous Air Pollutants (40 Code of Federal Regulations) [12]: regulates and limits the emissions of hazardous air pollutants, including radionuclides.

e. 49 CFR Part 173.4 through 173.471 [13], Packaging and Transportation of Radioactive Material.

4. To-be-considered (TBC) Guidance

In implementing this Removal Action, the following important guidance will be followed. These are guidelines that are not promulgated.

a. NYSDEC's Division of Air Guidelines for Control of Toxic Ambient Air Contaminants, Air Guide 1 [14]: This guide will be used to assess the impacts of air emissions and to assist with evaluating the need for having air-emissions control equipment.

b. Envirocare of Utah's Site's Waste Acceptance Guidelines Revision 3 and License (UT 2300249) Amendment 11 [15]: Radioactive and mixed waste acceptance guidelines for Envirocare.

c. All criteria required by DOE Order 435.1 "Radioactive Waste Management" [6] shall be met during this action. Because the expected contaminants of concern are radiological for Filters and hazardous and radiological for Coolers, the waste generated from Filters is expected to be radiological waste and that from the Coolers is mixed waste. As stated above, all waste will be disposed off-site in licensed waste disposal facility. The exact disposal location will be determined based upon final waste designation.

E. Project Schedule

Major tasks include preparing planning documentation, issuing subcontracts for waste processing, transportation, and disposal, carrying out the work, disposing of the waste, and issuing a closeout report. Current planning calls for the removal action to be completed by May 2002, with final waste shipments completed by August 2002.

F. Estimated Costs

The total project cost to remove and dispose of the BGRR Coolers and Filters is estimated to be $3,515,268.

VI. EXPECTED CHANGE IN THE SITUATION SHOULD ACTION BE DELAYED OR NOT TAKEN

A delayed action or no action will increase the potential for future releases of radioactive material to the environment. Delaying action will also potentially increase the scope and cost of the project as the condition of the duct structure continues to degrade.

VII. PUBLIC PARTICIPATION

Public participation for the Coolers and Filters Removal Action will include issuing a public notice. This will coincide with the submission of this Action Memorandum to the Administrative Record. Once this Action Memorandum has been issued, a public notice of its availability will be published in *Newsday* (regional distribution) and *Suffolk Life*.

Additionally, project updates are provided to the BGRR Working Group, Community Advisory Council, and Brookhaven Executive Roundtable. Further BGRR-related information is available to the public from the BGRR website and c*leanupdat*e newsletter.

VIII. OUTSTANDING POLICY ISSUES

The future use of the BGRR Fan House, Building 701, Building 801, and adjacent areas will not be impacted by the removal of the Coolers and Filters.

IX. ENFORCEMENT

The BNL site is owned by DOE and operated by Brookhaven Science Associates. The DOE will fund the source control disposal entirely. The removal action will be conducted in accordance with CERCLA and National Contingency Plan requirements, the Interagency Agreement, and applicable New York State regulations.

X. RECOMMENDATION

This decision document recommends a time-critical removal action of the Coolers and Filters of the BGRR at Brookhaven National Laboratory, New York. This decision document was developed in accordance with CERCLA as amended, and is consistent with the National Contingency Plan.

XI. REFERENCES

1. Interagency Agreement between United States Environmental Protection Agency – Region II, United States Department of Energy, and New York Sate Department of Environmental Conservation. Federal Facility Agreement under CERCLA Section 120, Administrative Document Number II-CERCLA-FFA-00201, 1992.

2. Code of Federal Regulations, National Oil and Hazardous Substances Pollution Contingency Plan (40 CFR 300) (U.S. Government Printing Office, Washington, D.C.).

3. New York Code, Rules and Regulations (1967), Surface Water and Groundwater Quality Standards and Groundwater Effluent Limitations, (Title 6 NYCRR Part 703) (Amended August 1999) (New York State Department of Environmental Conservation, Albany, NY).

4. Code of Federal Regulations, National Oil & Hazardous Substance Pollution Contingency Plan, Hazardous Substance Response (40 CFR 300.415 (b) (2)) (U.S. Government Printing Office, Washington, D.C.).

5. Office of Solid Waste and Emergency Response (OSWER) (Directive 9355.3-02), Interim Final Guidance on Preparing Superfund Decision Documents dated June 1, 1989 (Available from National Technical Information Service (NTIS), (Order No. PB 91-921265).

6. United States Department of Energy, (DOE Order 435.1), Radioactive Waste Management.

7. New York Code of Rules and Regulations, General Process Emissions Sources (6 NYCRR Part 212) (New York State Hazardous Waste Management Program.

8. Code of Federal Regulations, Hazardous Waste Management System (RCRA) (40 CFR Parts 260-268) (U.S. Government Printing Office, Washington, D.C.).

9. New York Code of Rules and Regulations, New York State Hazardous Waste Management Program (6 NYCRR Part 370 - 373).

10. Code of Federal Regulations, Occupational Radiation Protection (10 CFR Part 835) (U.S. Government Printing Office, Washington, D.C.).

11. *Clear Air Act* (42 U.S.C Section 7401, et seq.).

12. National Emissions Standards for Hazardous Air Pollutants (40 CFR).

13. Code of Federal Regulations (49 CFR Part 173.4) (U.S. Government Printing Office, Washington, D.C.)

14. New York State Department of Environmental Conservation, Division of Air Guidelines for Control of Toxic Ambient Air Contaminants, Air Guide 1.

15. Envirocare of Utah, Site Waste Acceptance Guidelines, Revision 3, and License (UT 2300249) Amendment 11.