PFS Remediation -Final Verification Sampling

Data Package 2

COC #	SDG#	Sample Description	Sample Number	Location #
6345	21746	PFS 4" line 20' off 704 - 0-6"	065-001000208-30	L1
6345	21746	PFS 4" line 20' off 704 - 6-12"	065-002000208-30	L2
6345	21746	PFS 4" line 20' off 704 - 12-18"	065-003000208-30	L3
6345	21746	PFS 4" line 69' off 704 - 0-6"	065-004000208-30	L4
6345	21746	PFS 4" line 69' off 704 - 6-12"	065-005000208-30	L5
6345	21746	PFS 4" line 69' off 704 - 12-18"	065-006000208-30	L6
6345	21746	PFS 4" line 32" off 704 - below leaking joint, 0-6"	065-007000208-30	L7
6345	21746	Trip Blank	TB-1	

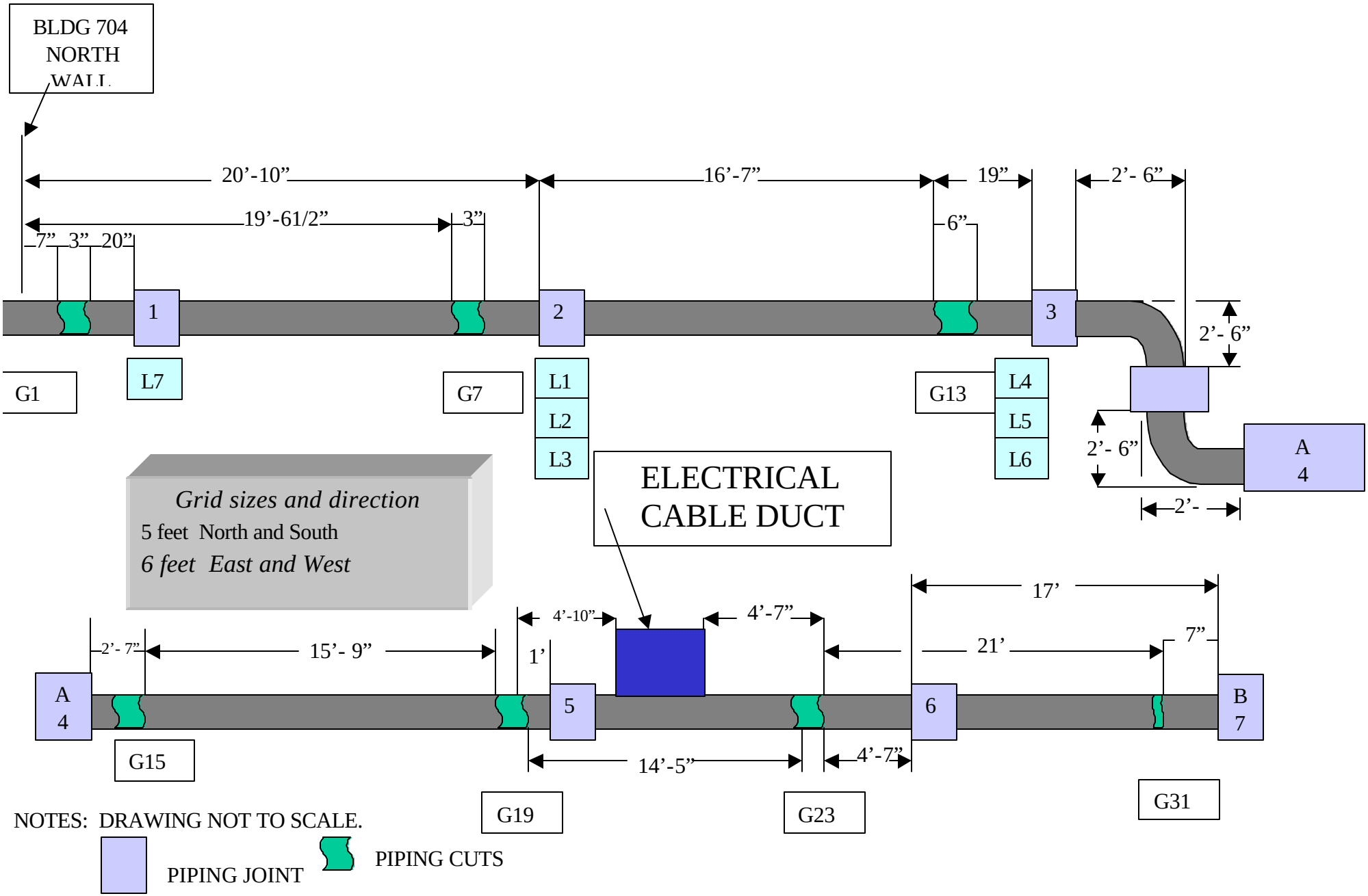

Data Package 2 Relative Soil Sample Locations L1 – L7

General Engineering Laboratories, Inc.

TARGET COMPOUNDS

Client Name: Brookhaven National 12-FEB-2000 00:00 Client SDG: 21746
Lab Smp Id: 21746008 Client Smp ID: 065-001000208-30
Sample Location: Sample Point:
Sample Date: 08-FEB-2000 Date Received: 12-FEB-2000
Sample Matrix: SOIL Quant Type: ISTD
Analysis Type: VOA Level: LOW
Data Type: MS DATA Operator: RMB
Misc Info: |VOA8260ASF| BRKL neat 5.0gm

CAS NO.	COMPOUND	CONCENTRATION UNITS: (ug/L or ug/KG) ug/Kg	Q
1330-20-7	Xylenes (total)	3.0	U
540-59-0	1,2-Dichloroethylene(total)	2.0	U
74-87-3	Chloromethane	1.0	U
75-01-4	Vinyl chloride	1.0	U
74-83-9	Bromomethane	1.0	U
75-00-3	Chloroethane	1.0	U
67-64-1	Acetone	4.0	J
75-35-4	1,1-Dichloroethylene	1.0	U
75-15-0	Carbon disulfide	5.0	U
75-09-2	Methylene chloride	5.0	U
156-60-5	trans-1,2-Dichloroethylene	1.0	U
75-34-3	1,1-Dichloroethane	1.0	U
108-05-4	Vinyl acetate	5.0	U
78-93-3	2-Butanone	5.0	U
67-66-3	Chloroform	1.0	U
156-59-2	cis-1,2-Dichloroethylene	1.0	U
56-23-5	Carbon tetrachloride	1.0	U
71-55-6	1,1,1-Trichloroethane	1.0	U
107-06-2	1,2-Dichloroethane	1.0	U
71-43-2	Benzene	1.0	U
79-01-6	Trichloroethylene	1.0	U
78-87-5	1,2-Dichloropropane	1.0	U
75-27-4	Bromodichloromethane	1.0	U
10061-01-5	cis-1,3-Dichloropropylene	1.0	U
108-10-1	4-Methyl-2-pentanone	5.0	U
108-88-3	Toluene	1.0	U
10061-02-6	trans-1,3-Dichloropropylene	1.0	U
79-00-5	1,1,2-Trichloroethane	1.0	U
591-78-6	2-Hexanone	5.0	U
127-18-4	Tetrachloroethylene	1.0	U
124-48-1	Dibromochloromethane	1.0	U
100-41-4	Ethylbenzene	1.0	U
108-90-7	Chlorobenzene	1.0	U
	m,p-Xylenes	2.0	U
95-47-6	o-Xylene	1.0	U

General Engineering Laboratories, Inc.

TARGET COMPOUNDS

Client Name: Brookhaven National 12-FEB-2000 00:00 Client SDG: 21746
Lab Smp Id: 21746008 Client Smp ID: 065-001000208-30
Sample Location: Sample Point:
Sample Date: 08-FEB-2000 Date Received: 12-FEB-2000
Sample Matrix: SOIL Quant Type: ISTD
Analysis Type: VOA Level: LOW
Data Type: MS DATA Operator: RMB
Misc Info: |VOA8260ASF| BRKL neat 5.0gm

CAS NO.	COMPOUND	CONCENTRATION UNITS: (ug/L or ug/KG) ug/Kg	Q
100-42-5	Styrene	1.0	U
75-25-2	Bromoform	1.0	U
79-34-5	1,1,2,2-Tetrachloroethane	1.0	U
1868-53-7	Dibromofluoromethane	44.6	
2037-26-5	Toluene-d8	53.5	
460-00-4	Bromofluorobenzene	51.6	

General Engineering Laboratories, Inc.

TARGET COMPOUNDS

Client Name: Brookhaven National 12-FEB-2000 00:00 Client SDG: 21746
Lab Smp Id: 21746009 Client Smp ID: 065-002000208-30
Sample Location: Sample Point:
Sample Date: 08-FEB-2000 Date Received: 12-FEB-2000
Sample Matrix: SOIL Quant Type: ISTD
Analysis Type: VOA Level: LOW
Data Type: MS DATA Operator: RMB
Misc Info: |VOA8260ASF| BRKL neat 5.0gm

CAS NO.	COMPOUND	CONCENTRATION UNITS: (ug/L or ug/KG) ug/Kg	Q
1330-20-7	Xylenes (total)	3.0	U
540-59-0	1,2-Dichloroethylene(total)	2.0	U
74-87-3	Chloromethane	1.0	U
75-01-4	Vinyl chloride	1.0	U
74-83-9	Bromomethane	1.0	U
75-00-3	Chloroethane	1.0	U
67-64-1	Acetone	111	
75-35-4	1,1-Dichloroethylene	1.0	U
75-15-0	Carbon disulfide	5.0	U
75-09-2	Methylene chloride	5.0	U
156-60-5	trans-1,2-Dichloroethylene	1.0	U
75-34-3	1,1-Dichloroethane	1.0	U
108-05-4	Vinyl acetate	5.0	U
78-93-3	2-Butanone	5.0	U
67-66-3	Chloroform	1.0	U
156-59-2	cis-1,2-Dichloroethylene	1.0	U
56-23-5	Carbon tetrachloride	1.0	U
71-55-6	1,1,1-Trichloroethane	1.0	U
107-06-2	1,2-Dichloroethane	1.0	U
71-43-2	Benzene	1.0	U
79-01-6	Trichloroethylene	1.0	U
78-87-5	1,2-Dichloropropane	1.0	U
75-27-4	Bromodichloromethane	1.0	U
10061-01-5	cis-1,3-Dichloropropylene	1.0	U
108-10-1	4-Methyl-2-pentanone	5.0	U
108-88-3	Toluene	1.0	U
10061-02-6	trans-1,3-Dichloropropylene	1.0	U
79-00-5	1,1,2-Trichloroethane	1.0	U
591-78-6	2-Hexanone	5.0	U
127-18-4	Tetrachloroethylene	1.0	U
124-48-1	Dibromochloromethane	1.0	U
100-41-4	Ethylbenzene	1.0	U
108-90-7	Chlorobenzene	1.0	U
	m,p-Xylenes	2.0	U
95-47-6	o-Xylene	1.0	U

General Engineering Laboratories, Inc.

TARGET COMPOUNDS

Client Name: Brookhaven National 12-FEB-2000 00:00 Client SDG: 21746
Lab Smp Id: 21746009 Client Smp ID: 065-002000208-30
Sample Location: Sample Point:
Sample Date: 08-FEB-2000 Date Received: 12-FEB-2000
Sample Matrix: SOIL Quant Type: ISTD
Analysis Type: VOA Level: LOW
Data Type: MS DATA Operator: RMB
Misc Info: |VOA8260ASF| BRKL neat 5.0gm

CAS NO.	COMPOUND	CONCENTRATION UNITS: (ug/L or ug/KG) ug/Kg	Q
100-42-5	Styrene	1.0	U
75-25-2	Bromoform	1.0	U
79-34-5	1,1,2,2-Tetrachloroethane	1.0	U
1868-53-7	Dibromofluoromethane	44.6	
2037-26-5	Toluene-d8	52.0	
460-00-4	Bromofluorobenzene	49.4	

General Engineering Laboratories, Inc.

TARGET COMPOUNDS

Client Name: Brookhaven National 12-FEB-2000 00:00 Client SDG: 21746
Lab Smp Id: 21746010 Client Smp ID: 065-003000208-30
Sample Location: Sample Point:
Sample Date: 08-FEB-2000 Date Received: 12-FEB-2000
Sample Matrix: SOIL Quant Type: ISTD
Analysis Type: VOA Level: LOW
Data Type: MS DATA Operator: RMB
Misc Info: |VOA8260ASF| BRKL neat 5.0gm

CAS NO.	COMPOUND	CONCENTRATION UNITS: (ug/L or ug/KG) ug/Kg	Q
1330-20-7	Xylenes (total)	3.1	U
540-59-0	1,2-Dichloroethylene(total)	2.0	U
74-87-3	Chloromethane	1.0	U
75-01-4	Vinyl chloride	1.0	U
74-83-9	Bromomethane	1.0	U
75-00-3	Chloroethane	1.0	U
67-64-1	Acetone	3.2	J
75-35-4	1,1-Dichloroethylene	1.0	U
75-15-0	Carbon disulfide	5.1	U
75-09-2	Methylene chloride	5.1	U
156-60-5	trans-1,2-Dichloroethylene	1.0	U
75-34-3	1,1-Dichloroethane	1.0	U
108-05-4	Vinyl acetate	5.1	U
78-93-3	2-Butanone	5.1	U
67-66-3	Chloroform	1.0	U
156-59-2	cis-1,2-Dichloroethylene	1.0	U
56-23-5	Carbon tetrachloride	1.0	U
71-55-6	1,1,1-Trichloroethane	1.0	U
107-06-2	1,2-Dichloroethane	1.0	U
71-43-2	Benzene	1.0	U
79-01-6	Trichloroethylene	1.0	U
78-87-5	1,2-Dichloropropane	1.0	U
75-27-4	Bromodichloromethane	1.0	U
10061-01-5	cis-1,3-Dichloropropylene	1.0	U
108-10-1	4-Methyl-2-pentanone	5.1	U
108-88-3	Toluene	1.0	U
10061-02-6	trans-1,3-Dichloropropylene	1.0	U
79-00-5	1,1,2-Trichloroethane	1.0	U
591-78-6	2-Hexanone	5.1	U
127-18-4	Tetrachloroethylene	1.0	U
124-48-1	Dibromochloromethane	1.0	U
100-41-4	Ethylbenzene	1.0	U
108-90-7	Chlorobenzene	1.0	U
----------	m,p-Xylenes	2.0	U
95-47-6	o-Xylene	1.0	U

General Engineering Laboratories, Inc.

TARGET COMPOUNDS

Client Name: Brookhaven National 12-FEB-2000 00:00 Client SDG: 21746
Lab Smp Id: 21746010 Client Smp ID: 065-003000208-30
Sample Location: Sample Point:
Sample Date: 08-FEB-2000 Date Received: 12-FEB-2000
Sample Matrix: SOIL Quant Type: ISTD
Analysis Type: VOA Level: LOW
Data Type: MS DATA Operator: RMB
Misc Info: |VOA8260ASF| BRKL neat 5.0gm

CAS NO.	COMPOUND	CONCENTRATION UNITS: (ug/L or ug/KG) ug/Kg	Q
100-42-5	Styrene	1.0	U
75-25-2	Bromoform	1.0	U
79-34-5	1,1,2,2-Tetrachloroethane	1.0	U
1868-53-7	Dibromofluoromethane	45.0	
2037-26-5	Toluene-d8	53.1	
460-00-4	Bromofluorobenzene	53.4	

General Engineering Laboratories, Inc.

TARGET COMPOUNDS

Client Name: Brookhaven National 12-FEB-2000 00:00 Client SDG: 21746
Lab Smp Id: 21746011 Client Smp ID: 065-004000208-30
Sample Location: Sample Point:
Sample Date: 08-FEB-2000 Date Received: 12-FEB-2000
Sample Matrix: SOIL Quant Type: ISTD
Analysis Type: VOA Level: LOW
Data Type: MS DATA Operator: RMB
Misc Info: |VOA8260ASF| BRKL neat 5.0gm

CAS NO.	COMPOUND	CONCENTRATION UNITS: (ug/L or ug/KG) ug/Kg	Q
1330-20-7	Xylenes (total)	3.1	U
540-59-0	1,2-Dichloroethylene(total)	2.0	U
74-87-3	Chloromethane	1.0	U
75-01-4	Vinyl chloride	1.0	U
74-83-9	Bromomethane	1.0	U
75-00-3	Chloroethane	1.0	U
67-64-1	Acetone	4.6	J
75-35-4	1,1-Dichloroethylene	1.0	U
75-15-0	Carbon disulfide	5.1	U
75-09-2	Methylene chloride	5.1	U
156-60-5	trans-1,2-Dichloroethylene	1.0	U
75-34-3	1,1-Dichloroethane	1.0	U
108-05-4	Vinyl acetate	5.1	U
78-93-3	2-Butanone	5.1	U
67-66-3	Chloroform	1.0	U
156-59-2	cis-1,2-Dichloroethylene	1.0	U
56-23-5	Carbon tetrachloride	1.0	U
71-55-6	1,1,1-Trichloroethane	1.0	U
107-06-2	1,2-Dichloroethane	1.0	U
71-43-2	Benzene	1.0	U
79-01-6	Trichloroethylene	1.0	U
78-87-5	1,2-Dichloropropane	1.0	U
75-27-4	Bromodichloromethane	1.0	U
10061-01-5	cis-1,3-Dichloropropylene	1.0	U
108-10-1	4-Methyl-2-pentanone	5.1	U
108-88-3	Toluene	1.0	U
10061-02-6	trans-1,3-Dichloropropylene	1.0	U
79-00-5	1,1,2-Trichloroethane	1.0	U
591-78-6	2-Hexanone	5.1	U
127-18-4	Tetrachloroethylene	1.0	U
124-48-1	Dibromochloromethane	1.0	U
100-41-4	Ethylbenzene	1.0	U
108-90-7	Chlorobenzene	1.0	U
	m,p-Xylenes	2.0	U
95-47-6	o-Xylene	1.0	U

General Engineering Laboratories, Inc.

TARGET COMPOUNDS

Client Name: Brookhaven National 12-FEB-2000 00:00 Client SDG: 21746
Lab Smp Id: 21746011 Client Smp ID: 065-004000208-30
Sample Location: Sample Point:
Sample Date: 08-FEB-2000 Date Received: 12-FEB-2000
Sample Matrix: SOIL Quant Type: ISTD
Analysis Type: VOA Level: LOW
Data Type: MS DATA Operator: RMB
Misc Info: |VOA8260ASF| BRKL neat 5.0gm

CAS NO.	COMPOUND	CONCENTRATION UNITS: (ug/L or ug/KG) ug/Kg	Q
100-42-5	Styrene	1.0	U
75-25-2	Bromoform	1.0	U
79-34-5	1,1,2,2-Tetrachloroethane	1.0	U
1868-53-7	Dibromofluoromethane	45.4	
2037-26-5	Toluene-d8	53.3	
460-00-4	Bromofluorobenzene	52.5	

General Engineering Laboratories, Inc.

TARGET COMPOUNDS

Client Name: Brookhaven National 12-FEB-2000 00:00 Client SDG: 21746
Lab Smp Id: 21746012 Client Smp ID: 065-005000208-30
Sample Location: Sample Point:
Sample Date: 08-FEB-2000 Date Received: 12-FEB-2000
Sample Matrix: SOIL Quant Type: ISTD
Analysis Type: VOA Level: LOW
Data Type: MS DATA Operator: RMB
Misc Info: |VOA8260ASF| BRKL neat 5.0gm

CAS NO.	COMPOUND	CONCENTRATION UNITS: (ug/L or ug/KG) ug/Kg	Q
1330-20-7	Xylenes (total)	3.0	U
540-59-0	1,2-Dichloroethylene(total)	2.0	U
74-87-3	Chloromethane	1.0	U
75-01-4	Vinyl chloride	1.0	U
74-83-9	Bromomethane	1.0	U
75-00-3	Chloroethane	1.0	U
67-64-1	Acetone	4.0	J
75-35-4	1,1-Dichloroethylene	1.0	U
75-15-0	Carbon disulfide	5.1	U
75-09-2	Methylene chloride	5.1	U
156-60-5	trans-1,2-Dichloroethylene	1.0	U
75-34-3	1,1-Dichloroethane	1.0	U
108-05-4	Vinyl acetate	5.1	U
78-93-3	2-Butanone	5.1	U
67-66-3	Chloroform	1.0	U
156-59-2	cis-1,2-Dichloroethylene	1.0	U
56-23-5	Carbon tetrachloride	1.0	U
71-55-6	1,1,1-Trichloroethane	1.0	U
107-06-2	1,2-Dichloroethane	1.0	U
71-43-2	Benzene	1.0	U
79-01-6	Trichloroethylene	1.0	U
78-87-5	1,2-Dichloropropane	1.0	U
75-27-4	Bromodichloromethane	1.0	U
10061-01-5	cis-1,3-Dichloropropylene	1.0	U
108-10-1	4-Methyl-2-pentanone	5.1	U
108-88-3	Toluene	1.0	U
10061-02-6	trans-1,3-Dichloropropylene	1.0	U
79-00-5	1,1,2-Trichloroethane	1.0	U
591-78-6	2-Hexanone	5.1	U
127-18-4	Tetrachloroethylene	1.0	U
124-48-1	Dibromochloromethane	1.0	U
100-41-4	Ethylbenzene	1.0	U
108-90-7	Chlorobenzene	1.0	U
----------	m,p-Xylenes	2.0	U
95-47-6	o-Xylene	1.0	U

General Engineering Laboratories, Inc.

TARGET COMPOUNDS

Client Name: Brookhaven National 12-FEB-2000 00:00 Client SDG: 21746
Lab Smp Id: 21746012 Client Smp ID: 065-005000208-30
Sample Location: Sample Point:
Sample Date: 08-FEB-2000 Date Received: 12-FEB-2000
Sample Matrix: SOIL Quant Type: ISTD
Analysis Type: VOA Level: LOW
Data Type: MS DATA Operator: RMB
Misc Info: |VOA8260ASF| BRKL neat 5.0gm

CAS NO.	COMPOUND	CONCENTRATION UNITS: (ug/L or ug/KG) ug/Kg	Q
100-42-5	Styrene	1.0	U
75-25-2	Bromoform	1.0	U
79-34-5	1,1,2,2-Tetrachloroethane	1.0	U
1868-53-7	Dibromofluoromethane	44.8	
2037-26-5	Toluene-d8	52.7	
460-00-4	Bromofluorobenzene	51.5	

General Engineering Laboratories, Inc.

TARGET COMPOUNDS

Client Name: Brookhaven National 12-FEB-2000 00:00 Client SDG: 21746
Lab Smp Id: 21746013 Client Smp ID: 065-006000208-30
Sample Location: Sample Point:
Sample Date: 08-FEB-2000 Date Received: 12-FEB-2000
Sample Matrix: SOIL Quant Type: ISTD
Analysis Type: VOA Level: LOW
Data Type: MS DATA Operator: RMB
Misc Info: |VOA8260ASF| BRKL neat 5.0gm

CAS NO.	COMPOUND	CONCENTRATION UNITS: (ug/L or ug/KG) ug/Kg	Q
1330-20-7	Xylenes (total)	3.0	U
540-59-0	1,2-Dichloroethylene(total)	2.0	U
74-87-3	Chloromethane	1.0	U
75-01-4	Vinyl chloride	1.0	U
74-83-9	Bromomethane	1.0	U
75-00-3	Chloroethane	1.0	U
67-64-1	Acetone	3.9	J
75-35-4	1,1-Dichloroethylene	1.0	U
75-15-0	Carbon disulfide	5.1	U
75-09-2	Methylene chloride	5.1	U
156-60-5	trans-1,2-Dichloroethylene	1.0	U
75-34-3	1,1-Dichloroethane	1.0	U
108-05-4	Vinyl acetate	5.1	U
78-93-3	2-Butanone	5.1	U
67-66-3	Chloroform	1.0	U
156-59-2	cis-1,2-Dichloroethylene	1.0	U
56-23-5	Carbon tetrachloride	1.0	U
71-55-6	1,1,1-Trichloroethane	1.0	U
107-06-2	1,2-Dichloroethane	1.0	U
71-43-2	Benzene	1.0	U
79-01-6	Trichloroethylene	1.0	U
78-87-5	1,2-Dichloropropane	1.0	U
75-27-4	Bromodichloromethane	1.0	U
10061-01-5	cis-1,3-Dichloropropylene	1.0	U
108-10-1	4-Methyl-2-pentanone	5.1	U
108-88-3	Toluene	1.0	U
10061-02-6	trans-1,3-Dichloropropylene	1.0	U
79-00-5	1,1,2-Trichloroethane	1.0	U
591-78-6	2-Hexanone	5.1	U
127-18-4	Tetrachloroethylene	1.0	U
124-48-1	Dibromochloromethane	1.0	U
100-41-4	Ethylbenzene	1.0	U
108-90-7	Chlorobenzene	1.0	U
----------	m,p-Xylenes	2.0	U
95-47-6	o-Xylene	1.0	U

General Engineering Laboratories, Inc.

TARGET COMPOUNDS

Client Name: Brookhaven National 12-FEB-2000 00:00 Client SDG: 21746
Lab Smp Id: 21746013 Client Smp ID: 065-006000208-30
Sample Location: Sample Point:
Sample Date: 08-FEB-2000 Date Received: 12-FEB-2000
Sample Matrix: SOIL Quant Type: ISTD
Analysis Type: VOA Level: LOW
Data Type: MS DATA Operator: RMB
Misc Info: |VOA8260ASF| BRKL neat 5.0gm

CAS NO.	COMPOUND	CONCENTRATION UNITS: (ug/L or ug/KG) ug/Kg	Q
100-42-5	Styrene	1.0	U
75-25-2	Bromoform	1.0	U
79-34-5	1,1,2,2-Tetrachloroethane	1.0	U
1868-53-7	Dibromofluoromethane	44.8	
2037-26-5	Toluene-d8	53.1	
460-00-4	Bromofluorobenzene	51.9	

General Engineering Laboratories, Inc.

TARGET COMPOUNDS

Client Name:
Lab Smp Id: 1000044576
Sample Location:
Sample Date: 08-FEB-2000
Sample Matrix: SOIL
Analysis Type: VOA
Data Type: MS DATA
Misc Info: |VOAQC_SF| BRKL 21746008PS 5.0gm

Client SDG: 21746
Client Smp ID: 065-001000208-30MS
Sample Point:
Date Received: 12-FEB-2000
Quant Type: ISTD
Level: LOW
Operator: RMB

CAS NO.	COMPOUND	CONCENTRATION UNITS: (ug/L or ug/KG) ug/Kg	Q
1330-20-7	Xylenes (total)	133	
540-59-0	1,2-Dichloroethylene(total)	77.5	
74-87-3	Chloromethane	38.6	
75-01-4	Vinyl chloride	46.5	
74-83-9	Bromomethane	58.4	
75-00-3	Chloroethane	43.8	
67-64-1	Acetone	455	
75-35-4	1,1-Dichloroethylene	38.6	
75-15-0	Carbon disulfide	320	
75-09-2	Methylene chloride	47.1	
156-60-5	trans-1,2-Dichloroethylene	37.0	
75-34-3	1,1-Dichloroethane	44.7	
108-05-4	Vinyl acetate	18.2	
78-93-3	2-Butanone	323	
67-66-3	Chloroform	45.0	
156-59-2	cis-1,2-Dichloroethylene	40.4	
56-23-5	Carbon tetrachloride	43.2	
71-55-6	1,1,1-Trichloroethane	47.1	
107-06-2	1,2-Dichloroethane	46.8	
71-43-2	Benzene	42.1	
79-01-6	Trichloroethylene	42.2	
78-87-5	1,2-Dichloropropane	44.8	
75-27-4	Bromodichloromethane	42.6	
10061-01-5	cis-1,3-Dichloropropylene	43.2	
108-10-1	4-Methyl-2-pentanone	334	
108-88-3	Toluene	44.4	
10061-02-6	trans-1,3-Dichloropropylene	49.4	
79-00-5	1,1,2-Trichloroethane	49.7	
591-78-6	2-Hexanone	401	
127-18-4	Tetrachloroethylene	41.5	
124-48-1	Dibromochloromethane	46.2	
100-41-4	Ethylbenzene	44.1	
108-90-7	Chlorobenzene	43.6	
	m,p-Xylenes	87.0	
95-47-6	o-Xylene	46.2	

General Engineering Laboratories, Inc.

TARGET COMPOUNDS

Client Name:
Lab Smp Id: 1000044576
Sample Location:
Sample Date: 08-FEB-2000
Sample Matrix: SOIL
Analysis Type: VOA
Data Type: MS DATA
Misc Info: |VOAQC_SF| BRKL 21746008PS 5.0gm

Client SDG: 21746
Client Smp ID: 065-001000208-30MS
Sample Point:
Date Received: 12-FEB-2000
Quant Type: ISTD
Level: LOW
Operator: RMB

CAS NO.	COMPOUND	CONCENTRATION UNITS: (ug/L or ug/KG) ug/Kg	Q
100-42-5	Styrene	46.1	
75-25-2	Bromoform	45.8	
79-34-5	1,1,2,2-Tetrachloroethane	50.6	
1868-53-7	Dibromofluoromethane	45.1	
2037-26-5	Toluene-d8	52.9	
460-00-4	Bromofluorobenzene	51.2	

General Engineering Laboratories, Inc.

TARGET COMPOUNDS

Client Name:
Lab Smp Id: 1000044577
Sample Location:
Sample Date: 08-FEB-2000
Sample Matrix: SOIL
Analysis Type: VOA
Data Type: MS DATA
Misc Info: |VOAQC_SF| BRKL 21746008PSD 5.0gm

Client SDG: 21746
Client Smp ID: 065-001000208-30MSD
Sample Point:
Date Received: 12-FEB-2000
Quant Type: ISTD
Level: LOW
Operator: RMB

CAS NO.	COMPOUND	CONCENTRATION UNITS: (ug/L or ug/KG) ug/Kg	Q
1330-20-7	Xylenes (total)	132	
540-59-0	1,2-Dichloroethylene(total)	76.9	
74-87-3	Chloromethane	38.1	
75-01-4	Vinyl chloride	45.8	
74-83-9	Bromomethane	58.3	
75-00-3	Chloroethane	43.9	
67-64-1	Acetone	428	
75-35-4	1,1-Dichloroethylene	38.4	
75-15-0	Carbon disulfide	315	
75-09-2	Methylene chloride	45.2	
156-60-5	trans-1,2-Dichloroethylene	37.0	
75-34-3	1,1-Dichloroethane	44.0	
108-05-4	Vinyl acetate	10.3	
78-93-3	2-Butanone	315	
67-66-3	Chloroform	44.9	
156-59-2	cis-1,2-Dichloroethylene	40.0	
56-23-5	Carbon tetrachloride	43.3	
71-55-6	1,1,1-Trichloroethane	46.1	
107-06-2	1,2-Dichloroethane	46.6	
71-43-2	Benzene	41.4	
79-01-6	Trichloroethylene	41.9	
78-87-5	1,2-Dichloropropane	44.7	
75-27-4	Bromodichloromethane	42.1	
10061-01-5	cis-1,3-Dichloropropylene	43.2	
108-10-1	4-Methyl-2-pentanone	335	
108-88-3	Toluene	43.5	
10061-02-6	trans-1,3-Dichloropropylene	48.6	
79-00-5	1,1,2-Trichloroethane	49.5	
591-78-6	2-Hexanone	391	
127-18-4	Tetrachloroethylene	41.4	
124-48-1	Dibromochloromethane	46.1	
100-41-4	Ethylbenzene	43.7	
108-90-7	Chlorobenzene	43.0	
	m,p-Xylenes	86.4	
95-47-6	o-Xylene	45.2	

General Engineering Laboratories, Inc.

TARGET COMPOUNDS

Client Name:
Lab Smp Id: 1000044577
Sample Location:
Sample Date: 08-FEB-2000
Sample Matrix: SOIL
Analysis Type: VOA
Data Type: MS DATA
Misc Info: |VOAQC_SF| BRKL 21746008PSD 5.0gm

Client SDG: 21746
Client Smp ID: 065-001000208-30MSD
Sample Point:
Date Received: 12-FEB-2000
Quant Type: ISTD
Level: LOW
Operator: RMB

CAS NO.	COMPOUND	CONCENTRATION UNITS: (ug/L or ug/KG) ug/Kg	Q
100-42-5	Styrene	44.9	
75-25-2	Bromoform	45.9	
79-34-5	1,1,2,2-Tetrachloroethane	50.3	
1868-53-7	Dibromofluoromethane	45.2	
2037-26-5	Toluene-d8	52.3	
460-00-4	Bromofluorobenzene	50.4	

General Engineering Laboratories, Inc.

TARGET COMPOUNDS

Client Name:
Lab Smp Id: 1000044574
Sample Location:
Sample Date:
Sample Matrix: SOIL
Analysis Type: VOA
Data Type: MS DATA
Misc Info: |VOAQC_SF| VBLK01

Client SDG: 21746
Client Smp ID: VBLK01
Sample Point:
Date Received: 13-APR-2000
Quant Type: ISTD
Level: LOW
Operator: RMB

CAS NO.	COMPOUND	CONCENTRATION UNITS: (ug/L or ug/KG) ug/Kg	Q
1330-20-7	Xylenes (total)	3.0	U
540-59-0	1,2-Dichloroethylene(total)	2.0	U
74-87-3	Chloromethane	1.0	U
75-01-4	Vinyl chloride	1.0	U
74-83-9	Bromomethane	1.0	U
75-00-3	Chloroethane	1.0	U
67-64-1	Acetone	5.0	U
75-35-4	1,1-Dichloroethylene	1.0	U
75-15-0	Carbon disulfide	5.0	U
75-09-2	Methylene chloride	5.0	U
156-60-5	trans-1,2-Dichloroethylene	1.0	U
75-34-3	1,1-Dichloroethane	1.0	U
108-05-4	Vinyl acetate	5.0	U
78-93-3	2-Butanone	5.0	U
67-66-3	Chloroform	1.0	U
156-59-2	cis-1,2-Dichloroethylene	1.0	U
56-23-5	Carbon tetrachloride	1.0	U
71-55-6	1,1,1-Trichloroethane	1.0	U
107-06-2	1,2-Dichloroethane	1.0	U
71-43-2	Benzene	1.0	U
79-01-6	Trichloroethylene	1.0	U
78-87-5	1,2-Dichloropropane	1.0	U
75-27-4	Bromodichloromethane	1.0	U
10061-01-5	cis-1,3-Dichloropropylene	1.0	U
108-10-1	4-Methyl-2-pentanone	5.0	U
108-88-3	Toluene	1.0	U
10061-02-6	trans-1,3-Dichloropropylene	1.0	U
79-00-5	1,1,2-Trichloroethane	1.0	U
591-78-6	2-Hexanone	5.0	U
127-18-4	Tetrachloroethylene	1.0	U
124-48-1	Dibromochloromethane	1.0	U
100-41-4	Ethylbenzene	1.0	U
108-90-7	Chlorobenzene	1.0	U
	m,p-Xylenes	2.0	U
95-47-6	o-Xylene	1.0	U

General Engineering Laboratories, Inc.

TARGET COMPOUNDS

Client Name:
Lab Smp Id: 1000044574
Sample Location:
Sample Date:
Sample Matrix: SOIL
Analysis Type: VOA
Data Type: MS DATA
Misc Info: |VOAQC_SF| VBLK01

Client SDG: 21746
Client Smp ID: VBLK01
Sample Point:
Date Received: 13-APR-2000
Quant Type: ISTD
Level: LOW
Operator: RMB

CAS NO.	COMPOUND	CONCENTRATION UNITS: (ug/L or ug/KG) ug/Kg	Q
100-42-5	Styrene	1.0	U
75-25-2	Bromoform	1.0	U
79-34-5	1,1,2,2-Tetrachloroethane	1.0	U
1868-53-7	Dibromofluoromethane	44.6	
2037-26-5	Toluene-d8	51.4	
460-00-4	Bromofluorobenzene	49.3	

General Engineering Laboratories, Inc.

TARGET COMPOUNDS

Client Name:
Lab Smp Id: 1000044575
Sample Location:
Sample Date:
Sample Matrix: SOIL
Analysis Type: VOA
Data Type: MS DATA
Misc Info: |VOAQC_SF| lcs uv000310-01d

Client SDG: 21746
Client Smp ID: VBLK01LCS
Sample Point:
Date Received: 13-APR-2000
Quant Type: ISTD
Level: LOW
Operator: RMB

CAS NO.	COMPOUND	CONCENTRATION UNITS: (ug/L or ug/KG) ug/Kg	Q
1330-20-7	Xylenes (total)	141	
540-59-0	1,2-Dichloroethylene(total)	80.1	
74-87-3	Chloromethane	33.5	
75-01-4	Vinyl chloride	41.2	
74-83-9	Bromomethane	51.1	
75-00-3	Chloroethane	38.9	
67-64-1	Acetone	388	
75-35-4	1,1-Dichloroethylene	40.6	
75-15-0	Carbon disulfide	316	
75-09-2	Methylene chloride	43.1	
156-60-5	trans-1,2-Dichloroethylene	38.9	
75-34-3	1,1-Dichloroethane	43.6	
108-05-4	Vinyl acetate	232	
78-93-3	2-Butanone	290	
67-66-3	Chloroform	45.0	
156-59-2	cis-1,2-Dichloroethylene	41.1	
56-23-5	Carbon tetrachloride	47.0	
71-55-6	1,1,1-Trichloroethane	48.7	
107-06-2	1,2-Dichloroethane	43.8	
71-43-2	Benzene	41.8	
79-01-6	Trichloroethylene	44.2	
78-87-5	1,2-Dichloropropane	44.0	
75-27-4	Bromodichloromethane	42.0	
10061-01-5	cis-1,3-Dichloropropylene	43.8	
108-10-1	4-Methyl-2-pentanone	287	
108-88-3	Toluene	46.3	
10061-02-6	trans-1,3-Dichloropropylene	48.9	
79-00-5	1,1,2-Trichloroethane	47.0	
591-78-6	2-Hexanone	333	
127-18-4	Tetrachloroethylene	48.9	
124-48-1	Dibromochloromethane	46.3	
100-41-4	Ethylbenzene	46.9	
108-90-7	Chlorobenzene	46.2	
	m,p-Xylenes	94.2	
95-47-6	o-Xylene	47.1	

General Engineering Laboratories, Inc.

TARGET COMPOUNDS

Client Name:
Lab Smp Id: 1000044575
Sample Location:
Sample Date:
Sample Matrix: SOIL
Analysis Type: VOA
Data Type: MS DATA
Misc Info: |VOAQC_SF| lcs uv000310-01d

Client SDG: 21746
Client Smp ID: VBLK01LCS
Sample Point:
Date Received: 13-APR-2000
Quant Type: ISTD
Level: LOW
Operator: RMB

CAS NO.	COMPOUND	CONCENTRATION UNITS: (ug/L or ug/KG) ug/Kg	Q
100-42-5	Styrene	47.9	
75-25-2	Bromoform	45.7	
79-34-5	1,1,2,2-Tetrachloroethane	48.3	
1868-53-7	Dibromofluoromethane	44.8	
2037-26-5	Toluene-d8	51.4	
460-00-4	Bromofluorobenzene	48.0	

Certificate of Analysis

Company : Brookhaven National Laboratory
Address : OER
Building 51M
Upton, NY 11973-5000
Contact: Ms. Anna Bou
Project: Routine Analytical

Report Date: April 18, 2000

Client Sample ID:	065-001ᴗ0208-30	Project:	BRKL00297
Sample ID:	21746008	Client ID:	BRKL001
Matrix:	Soil	COC:	6345
Collect Date:	08-FEB-00 14:43		
Receive Date:	12-FEB-00 12:00		
Collector:	Client		
Moisture:	.669%		

Parameter	Qualifier	Result	DL	RL	Units	DF	Analyst	Date	Time	Batch	Method
Mercury Analysis Federal											
7471 Cold Vapor Hg in Solid											
Mercury	U	ND	15.2	33.3	ug/kg	1	RMJ	04/11/00	1633	20526	1
Metals Analysis-ICP Federal											
6010 TAL Metals Soil Federal											
Aluminum		1270000	1200	4890	ug/kg	2	KAR	04/11/00	1718	20544	2
Antimony	U	ND	159	977	ug/kg	2					
Arsenic	J	300	255	489	ug/kg	2					
Barium		5120	90.8	489	ug/kg	2					
Beryllium	U	ND	60.8	489	ug/kg	2					
Cadmium	U	ND	74.6	489	ug/kg	2					
Calcium		610000	3370	9770	ug/kg	2					
Chromium		1660	126	489	ug/kg	2					
Cobalt		670	108	489	ug/kg	2					
Copper		2000	195	489	ug/kg	2					
Iron		1670000	2230	4890	ug/kg	2					
Lead		9820	194	489	ug/kg	2					
Magnesium		278000	360	1950	ug/kg	2					
Manganese		35900	173	977	ug/kg	2					
Nickel		1270	141	489	ug/kg	2					
Potassium		93300	4490	9770	ug/kg	2					
Selenium	U	ND	284	489	ug/kg	2					
Silver	U	ND	196	489	ug/kg	2					
Sodium		81000	597	9770	ug/kg	2					
Thallium	U	ND	401	977	ug/kg	2					
Vanadium		3250	145	489	ug/kg	2					
Zinc		4550	269	489	ug/kg	2					

The following Prep Methods were performed

Method	Description	Analyst	Date	Time	Prep Batch
SW846 3050B	846 3050BS PREP	AJM	04/10/00	2000	20310
SW846 5035	5030/8260A and 5035/8260B Prep	PS	04/11/00	0917	20421
SW846 7471A	EPA 7471 Mercury Prep Soil	ARD	04/10/00	2030	20307

The following Analytical Methods were performed

Method	Description
1	SW846 7471A

Certificate of Analysis

Company : Brookhaven National Laboratory
Address : OER
Building 51M
Upton, NY 11973-5000
Contact: Ms. Anna Bou
Project: Routine Analytical

Report Date: April 18, 2000

Client Sample ID:	065-002000208-30	Project:	BRKL00297
Sample ID:	21746009	Client ID:	BRKL001
Matrix:	Soil	COC:	6345
Collect Date:	08-FEB-00 15:17		
Receive Date:	12-FEB-00 12:00		
Collector:	Client		
Moisture:	.528%		

Parameter	Qualifier	Result	DL	RL	Units	DF	Analyst	Date	Time	Batch	Method
Mercury Analysis Federal											
7471 Cold Vapor Hg in Solid											
Mercury	U	ND	13.5	29.7	ug/kg	1	RMJ	04/11/00	1639	20526	1
Metals Analysis-ICP Federal											
6010 TAL Metals Soil Federal											
Aluminum		855000	1210	4930	ug/kg	2	KAR	04/11/00	1755	20544	2
Antimony	U	ND	161	986	ug/kg	2					
Arsenic	U	ND	257	493	ug/kg	2					
Barium		2180	91.6	493	ug/kg	2					
Beryllium	U	ND	61.3	493	ug/kg	2					
Cadmium	U	ND	75.2	493	ug/kg	2					
Calcium		220000	3400	9860	ug/kg	2					
Chromium		1060	127	493	ug/kg	2					
Cobalt		764	109	493	ug/kg	2					
Copper		2390	197	493	ug/kg	2					
Iron		1660000	2250	4930	ug/kg	2					
Lead		885	195	493	ug/kg	2					
Magnesium		298000	363	1970	ug/kg	2					
Manganese		29800	174	986	ug/kg	2					
Nickel		1210	142	493	ug/kg	2					
Potassium		68100	4520	9860	ug/kg	2					
Selenium	J	359	287	493	ug/kg	2					
Silver	U	ND	198	493	ug/kg	2					
Sodium		12300	602	9860	ug/kg	2					
Thallium	U	ND	404	986	ug/kg	2					
Vanadium		3420	146	493	ug/kg	2					
Zinc		3330	271	493	ug/kg	2					

The following Prep Methods were performed

Method	Description	Analyst	Date	Time	Prep Batch
SW846 3050B	846 3050BS PREP	AJM	04/10/00	2000	20310
SW846 5035	5030/8260A and 5035/8260B Prep	PS	04/11/00	0917	20421
SW846 7471A	EPA 7471 Mercury Prep Soil	ARD	04/10/00	2030	20307

The following Analytical Methods were performed

Method	Description
1	SW846 7471A

Certificate of Analysis

Company : Brookhaven National Laboratory
Address : OER
Building 51M
Upton, NY 11973-5000
Contact: Ms. Anna Bou
Project: Routine Analytical

Report Date: April 18, 2000

Client Sample ID: 065-002000208-30
Sample ID: 21746009

Project: BRKL00297
Client ID: BRKL001
COC: 6345

Parameter	Qualifier	Result	DL	RL	Units	DF	AnalystDate	Time	Batch	Method
.2	SW846 6010B									

Notes:
The Qualifiers in this report are defined as follows :

- * Indicates that a quality control analyte recovery is outside of specified acceptance criteria.
- ** Indicates the analyte is a surrogate compound.
- DL Failed required detection limit.
- J Indicates an estimated value. The result was greater than the detection limit, but less than the reporting limit.
- RI Not quantified due to interference.
- U Indicates the compound was analyzed for but not detected above the detection limit
- U Sample result < .5*MDA and MDA <= RDL.
- UJ .5*MDA < Sample result < MDA and MDA <= RDL.
- UJ-Q Not quantified due to low abundance.

The above sample is reported on a dry weight basis.
This data report has been prepared and reviewed in accordance with General Engineering Laboratories, Inc. standard operating procedures. Please direct any questions to your Project Manager, Nancy Slater at 843-556-8171 Ext. 4438 .

Reviewed by

Certificate of Analysis

Company : Brookhaven National Laboratory
Address : OER
Building 51M
Upton, NY 11973-5000
Contact: Ms. Anna Bou
Project: Routine Analytical

Report Date: April 18, 2000

Client Sample ID:	065-003000208-30	Project:	BRKL00297
Sample ID:	21746010	Client ID:	BRKL001
Matrix:	Soil	COC:	6345
Collect Date:	08-FEB-00 15:31		
Receive Date:	12-FEB-00 12:00		
Collector:	Client		
Moisture:	2.31%		

Parameter	Qualifier	Result	DL	RL	Units	DF	Analyst	Date	Time	Batch	Method
Mercury Analysis Federal											
7471 Cold Vapor Hg in Solid											
Mercury	U	ND	14.1	31.0	ug/kg	1	RMJ	04/11/00	1640	20526	1
Metals Analysis-ICP Federal											
6010 TAL Metals Soil Federal											
Aluminum		772000	1190	4830	ug/kg	2	KAR	04/11/00	1802	20544	2
Antimony	U	ND	157	966	ug/kg	2					
Arsenic	U	ND	252	483	ug/kg	2					
Barium		2110	89.7	483	ug/kg	2					
Beryllium	U	ND	60.1	483	ug/kg	2					
Cadmium	U	ND	73.7	483	ug/kg	2					
Calcium		89500	3330	9660	ug/kg	2					
Chromium		2050	125	483	ug/kg	2					
Cobalt	J	433	107	483	ug/kg	2					
Copper		1390	193	483	ug/kg	2					
Iron		1190000	2200	4830	ug/kg	2					
Lead		1100	191	483	ug/kg	2					
Magnesium		203000	355	1930	ug/kg	2					
Manganese		26100	171	966	ug/kg	2					
Nickel		1380	139	483	ug/kg	2					
Potassium		79300	4430	9660	ug/kg	2					
Selenium	U	ND	281	483	ug/kg	2					
Silver	U	ND	194	483	ug/kg	2					
Sodium		12700	590	9660	ug/kg	2					
Thallium	U	ND	396	966	ug/kg	2					
Vanadium		1880	143	483	ug/kg	2					
Zinc		2660	266	483	ug/kg	2					

The following Prep Methods were performed

Method	Description	Analyst	Date	Time	Prep Batch
SW846 3050B	846 3050BS PREP	AJM	04/10/00	2000	20310
SW846 5035	5030/8260A and 5035/8260B Prep	PS	04/11/00	0917	20421
SW846 7471A	EPA 7471 Mercury Prep Soil	ARD	04/10/00	2030	20307

The following Analytical Methods were performed

Method	Description
1	SW846 7471A

Certificate of Analysis

Company : Brookhaven National Laboratory
Address : OER
Building 51M
Upton, NY 11973-5000
Contact: Ms. Anna Bou
Project: Routine Analytical

Report Date: April 18, 2000

Client Sample ID: 065-003000208-30
Sample ID: 21746010

Project: BRKL00297
Client ID: BRKL001
COC: 6345

Parameter	Qualifier	Result	DL	RL	Units	DF	Analyst	Date	Time	Batch	Method
2	SW846 6010B										

Notes:
The Qualifiers in this report are defined as follows :

- * Indicates that a quality control analyte recovery is outside of specified acceptance criteria.
- ** Indicates the analyte is a surrogate compound.
- DL Failed required detection limit.
- J Indicates an estimated value. The result was greater than the detection limit, but less than the reporting limit.
- RI Not quantified due to interference.
- U Indicates the compound was analyzed for but not detected above the detection limit
- U Sample result < .5*MDA and MDA <= RDL.
- UJ .5*MDA < Sample result < MDA and MDA <= RDL.
- UJ-Q Not quantified due to low abundance.

The above sample is reported on a dry weight basis.
This data report has been prepared and reviewed in accordance with General Engineering Laboratories, Inc. standard operating procedures. Please direct any questions to your Project Manager, Nancy Slater at 843-556-8171 Ext. 4438 .

Reviewed by

Certificate of Analysis

Company : Brookhaven National Laboratory
Address : OER
Building 51M
Upton, NY 11973-5000
Contact: Ms. Anna Bou
Project: Routine Analytical

Report Date: April 18, 2000

Client Sample ID:	065-004000208-30	Project:	BRKL00297
Sample ID:	21746011	Client ID:	BRKL001
Matrix:	Soil	COC:	6345
Collect Date:	08-FEB-00 15:35		
Receive Date:	12-FEB-00 12:00		
Collector:	Client		
Moisture:	2.24%		

Parameter	Qualifier	Result	DL	RL	Units	DF	Analyst	Date	Time	Batch	Method
Mercury Analysis Federal											
7471 Cold Vapor Hg in Solid											
Mercury	U	ND	13.3	29.1	ug/kg	1	RMJ	04/11/00	1646	20526	1
Metals Analysis-ICP Federal											
6010 TAL Metals Soil Federal											
Aluminum		975000	1150	4690	ug/kg	2	KAR	04/11/00	1808	20544	2
Antimony	U	ND	153	938	ug/kg	2					
Arsenic	J	287	245	469	ug/kg	2					
Barium		2460	87.2	469	ug/kg	2					
Beryllium	U	ND	58.4	469	ug/kg	2					
Cadmium	U	ND	71.6	469	ug/kg	2					
Calcium		121000	3240	9380	ug/kg	2					
Chromium		2370	121	469	ug/kg	2					
Cobalt		506	104	469	ug/kg	2					
Copper		1820	188	469	ug/kg	2					
Iron		1380000	2140	4690	ug/kg	2					
Lead		1880	186	469	ug/kg	2					
Magnesium		226000	345	1880	ug/kg	2					
Manganese		41600	166	938	ug/kg	2					
Nickel		1150	135	469	ug/kg	2					
Potassium		63100	4310	9380	ug/kg	2					
Selenium	U	ND	273	469	ug/kg	2					
Silver	U	ND	189	469	ug/kg	2					
Sodium	J	5050	573	9380	ug/kg	2					
Thallium	U	ND	385	938	ug/kg	2					
Vanadium		2080	139	469	ug/kg	2					
Zinc		3550	258	469	ug/kg	2					

The following Prep Methods were performed

Method	Description	Analyst	Date	Time	Prep Batch
SW846 3050B	846 3050BS PREP	AJM	04/10/00	2000	20310
SW846 5035	5030/8260A and 5035/8260B Prep	PS	04/11/00	0917	20421
SW846 7471A	EPA 7471 Mercury Prep Soil	ARD	04/10/00	2030	20307

The following Analytical Methods were performed

Method	Description
1	SW846 7471A

Certificate of Analysis

Company : Brookhaven National Laboratory
Address : OER
Building 51M
Upton, NY 11973-5000
Contact: Ms. Anna Bou
Project: Routine Analytical

Report Date: April 18, 2000

Client Sample ID: 065-004000208-30
Sample ID: 21746011

Project: BRKL00297
Client ID: BRKL001
COC: 6345

Parameter	Qualifier	Result	DL	RL	Units	DF	AnalystDate	Time	Batch	Method
2	SW846 6010B									

Notes:
The Qualifiers in this report are defined as follows :

- * Indicates that a quality control analyte recovery is outside of specified acceptance criteria.
- ** Indicates the analyte is a surrogate compound.
- DL Failed required detection limit.
- J Indicates an estimated value. The result was greater than the detection limit, but less than the reporting limit.
- RI Not quantified due to interference.
- U Indicates the compound was analyzed for but not detected above the detection limit
- U Sample result < .5*MDA and MDA <= RDL.
- UJ .5*MDA < Sample result < MDA and MDA <= RDL.
- UJ-Q Not quantified due to low abundance.

The above sample is reported on a dry weight basis.
This data report has been prepared and reviewed in accordance with General Engineering Laboratories, Inc. standard operating procedures. Please direct any questions to your Project Manager, Nancy Slater at 843-556-8171 Ext. 4438 .

Reviewed by

Certificate of Analysis

Company : Brookhaven National Laboratory
Address : OER
Building 51M
Upton, NY 11973-5000
Contact: Ms. Anna Bou
Project: Routine Analytical

Report Date: April 18, 2000

Client Sample ID:	065-005000208-30	Project:	BRKL00297
Sample ID:	21746012	Client ID:	BRKL001
Matrix:	Soil	COC:	6345
Collect Date:	08-FEB-00 15:45		
Receive Date:	12-FEB-00 12:00		
Collector:	Client		
Moisture:	1.54%		

Parameter	Qualifier	Result	DL	RL	Units	DF	Analyst	Date	Time	Batch	Method
Mercury Analysis Federal											
7471 Cold Vapor Hg in Solid											
Mercury	U	ND	14.2	31.2	ug/kg	1	RMJ	04/11/00	1647	20526	1
Metals Analysis-ICP Federal											
6010 TAL Metals Soil Federal											
Aluminum		1050000	1170	4750	ug/kg	2	KAR	04/11/00	1814	20544	2
Antimony	U	ND	155	949	ug/kg	2					
Arsenic	U	ND	248	475	ug/kg	2					
Barium		2040	88.2	475	ug/kg	2					
Beryllium	U	ND	59.0	475	ug/kg	2					
Cadmium	U	ND	72.4	475	ug/kg	2					
Calcium		79500	3270	9490	ug/kg	2					
Chromium		1760	122	475	ug/kg	2					
Cobalt		622	105	475	ug/kg	2					
Copper		1560	190	475	ug/kg	2					
Iron		1760000	2160	4750	ug/kg	2					
Lead		1100	188	475	ug/kg	2					
Magnesium		358000	349	1900	ug/kg	2					
Manganese		33000	168	949	ug/kg	2					
Nickel		1740	137	475	ug/kg	2					
Potassium		69000	4360	9490	ug/kg	2					
Selenium	U	ND	276	475	ug/kg	2					
Silver	U	ND	191	475	ug/kg	2					
Sodium	J	5380	580	9490	ug/kg	2					
Thallium	U	ND	389	949	ug/kg	2					
Vanadium		2400	140	475	ug/kg	2					
Zinc		5280	261	475	ug/kg	2					

The following Prep Methods were performed

Method	Description	Analyst	Date	Time	Prep Batch
SW846 3050B	846 3050BS PREP	AJM	04/10/00	2000	20310
SW846 5035	5030/8260A and 5035/8260B Prep	PS	04/11/00	0917	20421
SW846 7471A	EPA 7471 Mercury Prep Soil	ARD	04/10/00	2030	20307

The following Analytical Methods were performed

Method	Description
1	SW846 7471A

Certificate of Analysis

Company : Brookhaven National Laboratory
Address : OER
Building 51M
Upton, NY 11973-5000
Contact: Ms. Anna Bou
Project: Routine Analytical

Report Date: April 18, 2000

Client Sample ID: 065-005000208-30
Sample ID: 21746012

Project: BRKL002.7
Client ID: BRKL001
COC: 6345

Parameter	Qualifier	Result	DL	RL	Units	DF	Analyst	Date	Time	Batch	Method
2	SW846 6010B										

Notes:
The Qualifiers in this report are defined as follows :

- * Indicates that a quality control analyte recovery is outside of specified acceptance criteria.
- ** Indicates the analyte is a surrogate compound.
- DL Failed required detection limit.
- J Indicates an estimated value. The result was greater than the detection limit, but less than the reporting limit.
- RI Not quantified due to interference.
- U Indicates the compound was analyzed for but not detected above the detection limit
- U Sample result < .5*MDA and MDA <= RDL.
- UJ .5*MDA < Sample result < MDA and MDA <= RDL.
- UJ-Q Not quantified due to low abundance.

The above sample is reported on a dry weight basis.
This data report has been prepared and reviewed in accordance with General Engineering Laboratories, Inc. standard operating procedures. Please direct any questions to your Project Manager, Nancy Slater at 843-556-8171 Ext. 4438 .

Reviewed by

Certificate of Analysis

Company : Brookhaven National Laboratory
Address : OER

Upton, NY 11973-5000
Contact: Ms. Anna Bou
Project: Routine Analytical

Report Date: April 18, 2000

065-006000208-30
21746013
Soil
08-FEB-00 15:52
12-FEB-00 12:00
Client

Project: BRKL00297
Client ID: BRKL001
COC: 6345

Parameter	Qualifier	Result	DL	RL	Units	DF	Analyst	Date	Time		Method
Mercury Analysis Federal											
7471 Cold Vapor Hg in Solid											
Mercury	U	ND		29.3	ug/kg	1	RMJ	04/11/00	1649	20526	1
Metals Analysis-ICP Federal											
6010 TAL Metals Soil Federal											
Aluminum		733000		5070	ug/kg	2	KAR	04/11/00	1820	20544	2
Antimony	U	ND		1010	ug/kg	2					
Arsenic	U	ND		507	ug/kg	2					
Barium		2950		507	ug/kg	2					
Beryllium	U	ND		507	ug/kg	2					
Cadmium	U	ND		507	ug/kg	2					
Calcium		88700		10100	ug/kg	2					
Chromium		1320		507	ug/kg	2					
Cobalt		539		507	ug/kg	2					
Copper		1350		507	ug/kg	2					
Iron		972000		5070	ug/kg	2					
Lead		938		507	ug/kg	2					
Magnesium		208000		2030	ug/kg	2					
Manganese		43200		1010	ug/kg	2					
Nickel		1150		507	ug/kg	2					
Potassium		80200		10100	ug/kg	2					
Selenium	U	ND		507	ug/kg	2					
Silver	U			5077	ug/kg	2	7LI.BLLQ/145, -/4-LI,LA		7LI.BLLQ/144 -/4,LI,LA		7LI.BLLQ/142 -/3
Sodium				10100	ug/kg	2					
Thallium	U			1010	ug/kg	2					
Vanadium				507	ug/kg	2					
Zinc				507	ug/kg	2					

Method	Description	Analyst	Date	Time	Prep Batch
		AJM		2000	
		PS		0917	
		ARD		2030	

The following Analytical Methods were performed

Method	Description
1	SW846 7471A

Certificate of Analysis

Company : Brookhaven National Laboratory
Address : OER
Building 51M
Upton, NY 11973-5000
Contact: Ms. Anna Bou
Project: Routine Analytical

Report Date: April 18, 2000

Client Sample ID: 065-006000208-30
Sample ID: 21746013

Project: BRKL00297
Client ID: BRKL001
COC: 6345

Parameter	Qualifier	Result	DL	RL	Units	DF	AnalystDate	Time	Batch	Method
2	SW846 6010B									

Notes:
The Qualifiers in this report are defined as follows :

- * Indicates that a quality control analyte recovery is outside of specified acceptance criteria.
- ** Indicates the analyte is a surrogate compound.
- DL Failed required detection limit.
- J Indicates an estimated value. The result was greater than the detection limit, but less than the reporting limit.
- RI Not quantified due to interference.
- U Indicates the compound was analyzed for but not detected above the detection limit
- U Sample result < .5*MDA and MDA <= RDL.
- UJ .5*MDA < Sample result < MDA and MDA <= RDL.
- UJ-Q Not quantified due to low abundance.

The above sample is reported on a dry weight basis.
This data report has been prepared and reviewed in accordance with General Engineering Laboratories, Inc. standard operating procedures. Please direct any questions to your Project Manager, Nancy Slater at 843-556-8171 Ext. 4438 .

Reviewed by

Certificate of Analysis

Company : Brookhaven National Laboratory
Address : OER
Building 51M
Upton, NY 11973-5000
Contact: Ms. Anna Bou
Project: Routine Analytical

Report Date: April 18, 2000

Client Sample ID:	065-001000208-30	Project:	BRKL00297
Sample ID:	21746001	Client ID:	BRKL001
Matrix:	Soil	COC:	6345
Collect Date:	08-FEB-00 14:43		
Receive Date:	12-FEB-00 12:00		
Collector:	Client		

Parameter	Qualifier	Result		DL	RL	Units	DF	Analyst	Date	Time	Batch	Method
Rad Alpha Spec												
Alphaspec Am241, Cm, solid												
Americium-241	U	ND	+/-0.0584	0.110	1.00	pCi/g	1	JAL	03/01/00	2231	12552	1
Alphaspec Pu, solid												
Plutonium-238	U	ND	+/-0.0616	0.116	6.60	pCi/g	1	JAL	03/02/00	2223	12554	2
Plutonium-239/240	U	ND	+/-0.0304	0.0714	4.00	pCi/g	1					
Alphaspec Th, solid												
Thorium-228	UJ	ND	+/-0.123	0.230	1.00	pCi/g	1	JAL	03/03/00	0747	12558	3
Thorium-230		0.137	+/-0.0883	0.0845	1.00	pCi/g	1					
Thorium-232		0.122	+/-0.0799	0.0365	1.00	pCi/g	1					
Alphaspec U, solid												
Uranium-233/234		0.101	+/-0.0742	0.0891	0.900	pCi/g	1	JAL	03/02/00	2232	12555	4
Uranium-235/236	U	ND	+/-0.0229	0.0342	0.900	pCi/g	1					
Uranium-238		0.132	+/-0.0806	0.0659	0.900	pCi/g	1					
Rad Gamma Spec												
Gamma I129, solid												
Iodine-129	U	ND	+/-0.154	0.244	1.00	pCi/g	1	SRB	03/03/00	0705	11821	5
Gammaspec, Gamma, solid												
Americium-241	U	ND	+/-0.0233	0.0397	4.00	pCi/g	1	SRB	03/05/00	1715	12443	6
Beryllium-7	U	ND	+/-0.166	0.307	1.00	pCi/g	1					
Cesium-134	U	ND	+/-0.0172	0.0284	0.100	pCi/g	1					
Cesium-137	U	ND	+/-0.0178	0.0322	2.30	pCi/g	1					
Cobalt-57	U	ND	+/-0.00844	0.0165	0.100	pCi/g	1					
Cobalt-60	U	ND	+/-0.0188	0.0311	0.100	pCi/g	1					
Europium-152	U	ND	+/-0.0413	0.0737	4.80	pCi/g	1					
Europium-154	U	ND	+/-0.0546	0.0961	17.0	pCi/g	1					
Europium-155	U	ND	+/-0.0325	0.0638	0.200	pCi/g	1					
Manganese-54	U	ND	+/-0.0172	0.0319	0.100	pCi/g	1					
Radium-226		0.202	+/-0.0857	0.057	1.00	pCi/g	1					
Sodium-22	U	ND	+/-0.0197	0.0347	0.700	pCi/g	1					
Vanadium-48	U	ND	+/-0.0549	0.095	1.00	pCi/g	1					
Zinc-65	U	ND	+/-0.0411	0.0705	0.200	pCi/g	1					
Rad Gas Flow												
GFPC, Gross A/B, solid												
Alpha		2.27	+/-0.778	1.05	1.00	pCi/g	1	TMC	03/14/00	1701	11755	7
Beta		3.13	+/-0.863	1.43	1.00	pCi/g	1					
GFPC, Sr90, solid												

Certificate of Analysis

Company : Brookhaven National Laboratory
Address : OER
Building 51M
Upton, NY 11973-5000
Contact: Ms. Anna Bou
Project: Routine Analytical

Report Date: April 18, 2000

Client Sample ID: 065-001000208-30
Sample ID: 21746001

Project: BRKL00297
Client ID: BRKL001
COC: 6345

Parameter	Qualifier	Result		DL	RL	Units	DF	Analyst	Date	Time	Batch	Method
Rad Gas Flow												
GFPC, Sr90, solid												
Strontium-90	U	ND	+/-0.472	1.10	7.50	pCi/g	1	AAK	03/02/00	2015	13236	8
Rad Liquid Scint												
LSC, Tritium Vacuum, solid												
Tritium	U	ND	+/-1.20	2.14	2.00	pCi/g	1	FDP	03/10/00	0743	13505	9
Liquid Scint C14, solid												
Carbon-14	U	ND	+/-0.118	0.209	1.00	pCi/g	1	KDA	03/16/00	0832	12078	10
Liquid Scint Ni63, solid												
Nickel-63	U	ND	+/-1.49	3.64	2.00	pCi/g	1	AEA	03/21/00	0233	14568	11
Liquid Scint Tc99, solid												
Technetium-99	U	ND	+/-0.232	0.702	5.00	pCi/g	1	AEA	02/21/00	1914	11952	12

The following Prep Methods were performed

Method	Description	Analyst	Date	Time	Prep Batch
Ash Soil Prep	Ash Soil Prep EPI A-021,A-021B,A-026	CRS	02/15/00	1034	11749
Dry Soil Prep	Dry Soil Prep EPI A-021,A-021B,A-026	CRS	02/14/00	1237	11509

The following Analytical Methods were performed

Method	Description
1	DOE EML HASL 300
2	DOE EML HASL 300
3	DOE EML HASL 300
4	DOE EML HASL 300
5	LANL EM-9
6	DOE EML HASL 300
7	EPA 900
8	EPA 905.0
9	EPA 906.0
10	EPA 504.1
11	DOE RESL Ni-1
12	DOE EML HASL 300

Notes:
The Qualifiers in this report are defined as follows :

* Indicates that a quality control analyte recovery is outside of specified acceptance criteria.

Certificate of Analysis

Company : Brookhaven National Laboratory
Address : OER
Building 51M
Upton, NY 11973-5000
Contact: Ms. Anna Bou
Project: Routine Analytical

Report Date: April 18, 2000

Client Sample ID: 065-001000208-30
Sample ID: 21746001

Project: BRKL00297
Client ID: BRKL001
COC: 6345

Parameter	Qualifier	Result	DL	RL	Units	DF	AnalystDate	Time	Batch	Method

** Indicates the analyte is a surrogate compound.
DL Failed required detection limit.
J Indicates an estimated value. The result was greater than the detection limit, but less than the reporting limit.
RI Not quantified due to interference.
U Indicates the compound was analyzed for but not detected above the detection limit
U Sample result < .5*MDA and MDA <= RDL.
UJ .5*MDA < Sample result < MDA and MDA <= RDL.
UJ-Q Not quantified due to low abundance.

The above sample is reported on an "as received" basis.

This data report has been prepared and reviewed in accordance with General Engineering Laboratories, Inc. standard operating procedures. Please direct any questions to your Project Manager, Nancy Slater at 843-556-8171 Ext. 4438 .

Reviewed by

Certificate of Analysis

Company : Brookhaven National Laboratory
Address : OER
Building 51M
Upton, NY 11973-5000
Contact: Ms. Anna Bou
Project: Routine Analytical

Report Date: April 18, 2000

Client Sample ID:	065-002000208-30	Project:	BRKL00297
Sample ID:	21746002	Client ID:	BRKL001
Matrix:	Soil	COC:	6345
Collect Date:	08-FEB-00 15:17		
Receive Date:	12-FEB-00 12:00		
Collector:	Client		

Parameter	Qualifier	Result		DL	RL	Units	DF	Analyst	Date	Time	Batch	Method
Rad Alpha Spec												
Alphaspec Am241, Cm, solid												
Americium-241	U	ND	+/-0.0596	0.126	1.00	pCi/g	1	JAL	03/01/00	2231	12552	1
Alphaspec Pu, solid												
Plutonium-238	U	ND	+/-0.114	0.225	6.60	pCi/g	1	JAL	03/02/00	2223	12554	2
Plutonium-239/240	U	ND	+/-0.034	0.118	4.00	pCi/g	1					
Alphaspec Th, solid												
Thorium-228	UJ	ND	+/-0.130	0.200	1.00	pCi/g	1	JAL	03/03/00	0747	12558	3
Thorium-230		0.0872	+/-0.0703	0.0832	1.00	pCi/g	1					
Thorium-232		0.180	+/-0.0985	0.0359	1.00	pCi/g	1					
Alphaspec U, solid												
Uranium-233/234		0.130	+/-0.0833	0.0389	0.900	pCi/g	1	JAL	03/02/00	2232	12555	4
Uranium-235/236	U	ND	+/-0.0261	0.039	0.900	pCi/g	1					
Uranium-238	UJ	ND	+/-0.0705	0.0901	0.900	pCi/g	1					
Rad Gamma Spec												
Gamma I129, solid												
Iodine-129	U	ND	+/-0.140	0.201	1.00	pCi/g	1	SRB	03/03/00	0802	11821	5
Gammaspec, Gamma, solid												
Americium-241	U	ND	+/-0.023	0.0433	4.00	pCi/g	1	SRB	03/05/00	1728	12443	6
Beryllium-7	U	ND	+/-0.103	0.162	1.00	pCi/g	1					
Cesium-134	U	ND	+/-0.0119	0.0183	0.100	pCi/g	1					
Cesium-137	UJ	ND	+/-0.0179	0.0166	2.30	pCi/g	1					
Cobalt-57	U	ND	+/-0.00643	0.0117	0.100	pCi/g	1					
Cobalt-60	U	ND	+/-0.0117	0.0207	0.100	pCi/g	1					
Europium-152	U	ND	+/-0.027	0.0439	4.80	pCi/g	1					
Europium-154	U	ND	+/-0.0321	0.0577	17.0	pCi/g	1					
Europium-155	U	ND	+/-0.0362	0.048	0.200	pCi/g	1					
Manganese-54	U	ND	+/-0.0107	0.019	0.100	pCi/g	1					
Radium-226		0.114	+/-0.0425	0.0377	1.00	pCi/g	1					
Sodium-22	U	ND	+/-0.0115	0.0208	0.700	pCi/g	1					
Vanadium-48	UJ	ND	+/-0.0313	0.0606	1.00	pCi/g	1					
Zinc-65	UJ	ND	+/-0.0297	0.0487	0.200	pCi/g	1					
Rad Gas Flow												
GFPC, Gross A/B, solid												
Alpha		4.17	+/-1.27	1.09	1.00	pCi/g	1	TMC	03/09/00	0037	11755	7
Beta		3.51	+/-1.06	1.74	1.00	pCi/g	1					
GFPC, Sr90, solid												
Strontium-90	U	ND	+/-0.831	2.06	7.50	pCi/g	1	AAK	03/01/00	1702	13236	8

Certificate of Analysis

Company : Brookhaven National Laboratory
Address : OER
Building 51M
Upton, NY 11973-5000
Contact: Ms. Anna Bou
Project: Routine Analytical

Report Date: April 18, 2000

Client Sample ID: 065-002000208-30
Sample ID: 21746002

Project: BRKL00297
Client ID: BRKL001
COC: 6345

Parameter	Qualifier	Result		DL	RL	Units	DF	Analyst	Date	Time	Batch	Method
Rad Liquid Scint												
LSC, Tritium Vacuum, solid												
Tritium	U	ND	+/-0.986	1.71	2.00	pCi/g	1	FDP	03/10/00	0815	13505	9
Liquid Scint C14, solid												
Carbon-14	U	ND	+/-0.118	0.208	1.00	pCi/g	1	KDA	03/16/00	0904	12078	10
Liquid Scint Ni63, solid												
Nickel-63	U	ND	+/-1.51	3.67	2.00	pCi/g	1	AEA	03/21/00	0320	14568	11
Liquid Scint Tc99, solid												
Technetium-99	U	ND	+/-0.276	0.771	5.00	pCi/g	1	AEA	02/21/00	1946	11952	12

The following Prep Methods were performed

Method	Description	Analyst	Date	Time	Prep Batch
Ash Soil Prep	Ash Soil Prep EPI A-021,A-021B,A-026	CRS	02/15/00	1035	11749
Dry Soil Prep	Dry Soil Prep EPI A-021,A-021B,A-026	CRS	02/14/00	1237	11509

The following Analytical Methods were performed

Method	Description
1	DOE EML HASL 300
2	DOE EML HASL 300
3	DOE EML HASL 300
4	DOE EML HASL 300
5	LANL EM-9
6	DOE EML HASL 300
7	EPA 900
8	EPA 905.0
9	EPA 906.0
10	EPA 504.1
11	DOE RESL Ni-1
12	DOE EML HASL 300

Notes:
The Qualifiers in this report are defined as follows :

- * Indicates that a quality control analyte recovery is outside of specified acceptance criteria.
- ** Indicates the analyte is a surrogate compound.
- DL Failed required detection limit.
- J Indicates an estimated value. The result was greater than the detection limit, but less than the reporting limit.

Certificate of Analysis

Company : Brookhaven National Laboratory
Address : OER
Building 51M
Upton, NY 11973-5000
Contact: Ms. Anna Bou
Project: Routine Analytical

Report Date: April 18, 2000

Client Sample ID: 065-002000208-30
Sample ID: 21746002

Proiect: BRKL00297
Client ID: BRKL001
COC: 6345

Parameter	Qualifier	Result	DL	RL	Units	DF	AnalystDate	Time	Batch	Method

RI Not quantified due to interference.
U Indicates the compound was analyzed for but not detected above the detection limit
U Sample result < .5*MDA and MDA <= RDL.
UJ .5*MDA < Sample result < MDA and MDA <= RDL.
UJ-Q Not quantified due to low abundance.

The above sample is reported on an "as received" basis.

This data report has been prepared and reviewed in accordance with General Engineering Laboratories, Inc. standard operating procedures. Please direct any questions to your Project Manager, Nancy Slater at 843-556-8171 Ext. 4438 .

Reviewed by

Certificate of Analysis

Company : Brookhaven National Laboratory
Address : OER
Building 51M
Upton, NY 11973-5000
Contact: Ms. Anna Bou
Project: Routine Analytical

Report Date: April 18, 2000

Client Sample ID: 065-003000208-30
Sample ID: 21746003
Matrix: Soil
Collect Date: 08-FEB-00 15:31
Receive Date: 12-FEB-00 12:00
Collector: Client

BRKL00297
Client ID: BRKL001
COC: 6345

Parameter	Qualifier	Result		DL	RL	Units	DF	Analyst	Date	Time	Batch	Method
Rad Alpha Spec												
Alphaspec Am241, Cm, solid												
Americium-241	U	ND	+/-0.0505	0.0958	1.00	pCi/g	1	JAL	03/01/00	2231	12552	1
Alphaspec Pu, solid												
Plutonium-238	U	ND	+/-0.0977	0.241	6.60	pCi/g	1	JAL	03/02/00	2223	12554	2
Plutonium-239/240	U	ND	+/-0.0353	0.123	4.00	pCi/g	1					
Alphaspec Th, solid												
Thorium-228	UJ	ND	+/-0.115	0.212	1.00	pCi/g	1	JAL	03/03/00	0759	12558	3
Thorium-230		0.0953	+/-0.080	0.0909	1.00	pCi/g	1					
Thorium-232		0.0585	+/-0.0595	0.0438	1.00	pCi/g	1					
Alphaspec U, solid												
Uranium-233/234	U	ND	+/-0.0691	0.132	0.900	pCi/g	1	JAL	03/02/00	2232	12555	4
Uranium-235/236	U	ND	+/-0.0192	0.0288	0.900	pCi/g	1					
Uranium-238		0.0862	+/-0.0582	0.0287	0.900	pCi/g	1					
Rad Gamma Spec												
Gamma I129, solid												
Iodine-129	UJ	ND	+/-0.169	0.257	1.00	pCi/g	1	SRB	03/03/00	0950	11821	5
Gammaspec; Gamma, solid												
Americium-241	U	ND	+/-0.018	0.0301	4.00	pCi/g	1	SRB	03/05/00	2309	12443	6
Beryllium-7	U	ND	+/-0.133	0.244	1.00	pCi/g	1					
Cesium-134	U	ND	+/-0.0142	0.0234	0.100	pCi/g	1					
Cesium-137	UJ	ND	+/-0.0179	0.0276	2.30	pCi/g	1					
Cobalt-57	U	ND	+/-0.00679	0.013	0.100	pCi/g	1					
Cobalt-60	U	ND	+/-0.0156	0.0272	0.100	pCi/g	1					
Europium-152	U	ND	+/-0.0336	0.0598	4.80	pCi/g	1					
Europium-154	U	ND	+/-0.0459	0.0805	17.0	pCi/g	1					
Europium-155	UJ	ND	+/-0.0371	0.0507	0.200	pCi/g	1					
Manganese-54	UJ	ND	+/-0.0244	0.0251	0.100	pCi/g	1					
Radium-226		0.158	+/-0.0606	0.0503	1.00	pCi/g	1					
Sodium-22	U	ND	+/-0.0165	0.029	0.700	pCi/g	1					
Vanadium-48	U	ND	+/-0.0402	0.0704	1.00	pCi/g	1					
Zinc-65	U	ND	+/-0.0349	0.058	0.200	pCi/g	1					
Rad Gas Flow												
GFPC, Gross A/B, solid												
Alpha		1.60	+/-1.01	1.45	1.00	pCi/g	1	TMC	03/09/00	0037	11755	7
Beta		5.00	+/-1.40	2.21	1.00	pCi/g	1					
GFPC, Sr90, solid												
Strontium-90	U	ND	+/-0.837	2.28	7.50	pCi/g	1	AAK	03/01/00	1702	13236	8

Certificate of Analysis

Company : Brookhaven National Laboratory
Address : OER
Building 51M
Upton, NY 11973-5000
Contact: Ms. Anna Bou
Project: Routine Analytical

Report Date: April 18, 2000

Client Sample ID: 065-003000208-30
Sample ID: 21746003

Project: BRKL00297
Client ID: BRKL001
COC: 6345

Parameter	Qualifier	Result		DL	RL	Units	DF	Analyst	Date	Time	Batch	Method
Rad Liquid Scint												
LSC, Tritium Vacuum, solid												
Tritium	U	ND	+/-1.03	1.75	2.00	pCi/g	1	FDP	03/10/00	0846	13505	9
Liquid Scint C14, solid												
Carbon-14	U	ND	+/-0.126	0.216	1.00	pCi/g	1	KDA	03/16/00	0936	12078	10
Liquid Scint Ni63, solid												
Nickel-63	U	ND	+/-1.69	4.13	2.00	pCi/g	1	AEA	03/21/00	0407	14568	11
Liquid Scint Tc99, solid												
Technetium-99	U	ND	+/-0.299	0.815	5.00	pCi/g	1	AEA	02/21/00	2018	11952	12

The following Prep Methods were performed

Method	Description	Analyst	Date	Time	Prep Batch
Ash Soil Prep	Ash Soil Prep EPI A-021,A-021B,A-026	CRS	02/15/00	1035	11749
Dry Soil Prep	Dry Soil Prep EPI A-021,A-021B,A-026	CRS	02/14/00	1237	11509

The following Analytical Methods were performed

Method	Description
1	DOE EML HASL 300
2	DOE EML HASL 300
3	DOE EML HASL 300
4	DOE EML HASL 300
5	LANL EM-9
6	DOE EML HASL 300
7	EPA 900
8	EPA 905.0
9	EPA 906.0
10	EPA 504.1
11	DOE RESL Ni-1
12	DOE EML HASL 300

Notes:
The Qualifiers in this report are defined as follows :

- * Indicates that a quality control analyte recovery is outside of specified acceptance criteria.
- ** Indicates the analyte is a surrogate compound.
- DL Failed required detection limit.
- J Indicates an estimated value. The result was greater than the detection limit, but less than the reporting limit.

Certificate of Analysis

Company : Brookhaven National Laboratory
Address : OER
Building 51M
Upton, NY 11973-5000
Contact: Ms. Anna Bou
Project: Routine Analytical

Report Date: April 18, 2000

Client Sample ID: 065-003000208-30
Sample ID: 21746003

Project: BRKL00297
Client ID: BRKL001
COC: 6345

Parameter	Qualifier	Result	DL	RL	Units	DF	AnalystDate	Time	Batch	Method

RI Not quantified due to interference.
U Indicates the compound was analyzed for but not detected above the detection limit
U Sample result < .5*MDA and MDA <= RDL.
UJ .5*MDA < Sample result < MDA and MDA <= RDL.
UJ-Q Not quantified due to low abundance.

The above sample is reported on an "as received" basis.

This data report has been prepared and reviewed in accordance with General Engineering Laboratories, Inc. standard operating procedures. Please direct any questions to your Project Manager, Nancy Slater at 843-556-8171 Ext. 4438 .

Reviewed by

Certificate of Analysis

Company : Brookhaven National Laboratory
Address : OER
Building 51M
Upton, NY 11973-5000
Contact: Ms. Anna Bou
Project: Routine Analytical

Report Date: April 18, 2000

Client Sample ID:	065-004000208-30	Project:	BRKL00297
Sample ID:	21746004	Client ID:	BRKL001
Matrix:	Soil	COC:	6345
Collect Date:	08-FEB-00 15:35		
Receive Date:	12-FEB-00 12:00		
Collector:	Client		

Parameter	Qualifier	Result		DL	RL	Units	DF	Analyst	Date	Time	Batch	Method
Rad Alpha Spec												
Alphaspec Am241, Cm, solid												
Americium-241	U	ND	+/-0.0565	0.134	1.00	pCi/g	1	JAL	03/01/00	2235	12552	1
Alphaspec Pu, solid												
Plutonium-238	U	ND	+/-0.0717	0.159	6.60	pCi/g	1	JAL	03/02/00	2223	12554	2
Plutonium-239/240	U	ND	+/-0.036	0.0808	4.00	pCi/g	1					
Alphaspec Th, solid												
Thorium-228	UJ	ND	+/-0.103	0.160	1.00	pCi/g	1	JAL	03/03/00	0752	12558	3
Thorium-230	U	ND	+/-0.0593	0.0997	1.00	pCi/g	1					
Thorium-232		0.176	+/-0.109	0.0997	1.00	pCi/g	1					
Alphaspec U, solid												
Uranium-233/234	U	ND	+/-0.0638	0.117	0.900	pCi/g	1	JAL	03/02/00	2236	12555	4
Uranium-235/236	U	ND	+/-0.0291	0.0827	0.900	pCi/g	1					
Uranium-238		0.0592	+/-0.0481	0.0517	0.900	pCi/g	1					
Rad Gamma Spec												
Gamma I129, solid												
Iodine-129	U	ND	+/-0.156	0.216	1.00	pCi/g	1	SRB	03/03/00	1215	11821	5
Gammaspec, Gamma, solid												
Americium-241	U	ND	+/-0.0158	0.029	4.00	pCi/g	1	SRB	03/05/00	2311	12443	6
Beryllium-7	U	ND	+/-0.117	0.218	1.00	pCi/g	1					
Cesium-134	U	ND	+/-0.0126	0.0202	0.100	pCi/g	1					
Cesium-137		0.0754	+/-0.0291	0.0195	2.30	pCi/g	1					
Cobalt-57	U	ND	+/-0.00685	0.0124	0.100	pCi/g	1					
Cobalt-60	U	ND	+/-0.0121	0.0229	0.100	pCi/g	1					
Europium-152	U	ND	+/-0.0276	0.050	4.80	pCi/g	1					
Europium-154	U	ND	+/-0.0361	0.0632	17.0	pCi/g	1					
Europium-155	U	ND	+/-0.0257	0.0461	0.200	pCi/g	1					
Manganese-54	UJ	ND	+/-0.0142	0.0213	0.100	pCi/g	1					
Radium-226		0.161	+/-0.0536	0.0407	1.00	pCi/g	1					
Sodium-22	U	ND	+/-0.013	0.0228	0.700	pCi/g	1					
Vanadium-48	U	ND	+/-0.0382	0.0691	1.00	pCi/g	1					
Zinc-65	U	ND	+/-0.029	0.0466	0.200	pCi/g	1					
Rad Gas Flow												
GFPC, Gross A/B, solid												
Alpha		1.35	+/-0.868	1.24	1.00	pCi/g	1	TMC	03/09/00	0037	11755	7
Beta		2.00	+/-0.990	1.88	1.00	pCi/g	1					
GFPC, Sr90, solid												
Strontium-90	U	ND	+/-0.812	2.09	7.50	pCi/g	1	AAK	03/01/00	1702	13236	8

Certificate of Analysis

Company : Brookhaven National Laboratory
Address : OER
Building 51M
Upton, NY 11973-5000
Contact: Ms. Anna Bou
Project: Routine Analytical

Report Date: April 18, 2000

Client Sample ID: 065-004000208-30
Sample ID: 21746004

Project: BRKL00297
Client ID: BRKL001
COC: 6345

Parameter	Qualifier	Result		DL	RL	Units	DF	Analyst	Date	Time	Batch	Method
Rad Liquid Scint												
LSC, Tritium Vacuum, solid												
Tritium	U	ND	+/-1.03	1.76	2.00	pCi/g	1	FDP	03/10/00	0918	13505	9
Liquid Scint C14, solid												
Carbon-14	UJ	ND	+/-0.136	0.222	1.00	pCi/g	1	KDA	03/16/00	1008	12078	10
Liquid Scint Ni63, solid												
Nickel-63	U	ND	+/-1.48	3.60	2.00	pCi/g	1	AEA	03/21/00	0455	14568	11
Liquid Scint Tc99, solid												
Technetium-99	U	ND	+/-0.345	0.893	5.00	pCi/g	1	AEA	02/21/00	2050	11952	12

The following Prep Methods were performed

Method	Description	Analyst	Date	Time	Prep Batch
Ash Soil Prep	Ash Soil Prep EPI A-021,A-021B,A-026	CRS	02/15/00	1035	11749
Dry Soil Prep	Dry Soil Prep EPI A-021,A-021B,A-026	CRS	02/14/00	1237	11509

The following Analytical Methods were performed

Method	Description
1	DOE EML HASL 300
2	DOE EML HASL 300
3	DOE EML HASL 300
4	DOE EML HASL 300
5	LANL EM-9
6	DOE EML HASL 300
7	EPA 900
8	EPA 905.0
9	EPA 906.0
10	EPA 504.1
11	DOE RESL Ni-1
12	DOE EML HASL 300

Notes:
The Qualifiers in this report are defined as follows :

- * Indicates that a quality control analyte recovery is outside of specified acceptance criteria.
- ** Indicates the analyte is a surrogate compound.
- DL Failed required detection limit.
- J Indicates an estimated value. The result was greater than the detection limit, but less than the reporting limit.

Certificate of Analysis

Company : Brookhaven National Laboratory
Address : OER
Building 51M
Upton, NY 11973-5000
Contact: Ms. Anna Bou
Project: Routine Analytical

Report Date: April 18, 2000

Client Sample ID: 065-004000208-30
Sample ID: 21746004

Project: BRKL00297
Client ID: BRKL001
COC: 6345

Parameter	Qualifier	Result	DL	RL	Units	DF	AnalystDate	Time	Batch	Method

RI Not quantified due to interference.
U Indicates the compound was analyzed for but not detected above the detection limit
U Sample result < .5*MDA and MDA <= RDL.
UJ .5*MDA < Sample result < MDA and MDA <= RDL.
UJ-Q Not quantified due to low abundance.

The above sample is reported on an "as received" basis.

This data report has been prepared and reviewed in accordance with General Engineering Laboratories, Inc. standard operating procedures. Please direct any questions to your Project Manager, Nancy Slater at 843-556-8171 Ext. 4438 .

Reviewed by

Certificate of Analysis

Company : Brookhaven National Laboratory
Address : OER
Building 51M
Upton, NY 11973-5000
Contact: Ms. Anna Bou
Project: Routine Analytical

Report Date: April 18, 2000

Client Sample ID:	065-005000208-30	Project:	BRKL00297
Sample ID:	21746005	Client ID:	BRKL001
Matrix:	Soil	COC:	6345
Collect Date:	08-FEB-00 15:45		
Receive Date:	12-FEB-00 12:00		
Collector:	Client		

Parameter	Qualifier	Result		DL	RL	Units	DF	Analyst	Date	Time	Batch	Method
Rad Alpha Spec												
Alphaspec Am241, Cm, solid												
Americium-241	U	ND	+/-0.0929	0.210	1.00	pCi/g	1	JAL	03/01/00	2235	12552	1
Alphaspec Pu, solid												
Plutonium-238	U	ND	+/-0.0815	0.174	6.60	pCi/g	1	JAL	03/02/00	2223	12554	2
Plutonium-239/240	U	ND	+/-0.0357	0.0724	4.00	pCi/g	1					
Alphaspec Th, solid												
Thorium-228		0.132	+/-0.0911	0.113	1.00	pCi/g	1	JAL	03/03/00	0752	12558	3
Thorium-230	UJ	ND	+/-0.0476	0.0615	1.00	pCi/g	1					
Thorium-232		0.0582	+/-0.0532	0.0349	1.00	pCi/g	1					
Alphaspec U, solid												
Uranium-233/234		0.263	+/-0.122	0.105	0.900	pCi/g	1	JAL	03/02/00	2236	12555	4
Uranium-235/236	U	ND	+/-0.00	0.0367	0.900	pCi/g	1					
Uranium-238		0.121	+/-0.0835	0.0957	0.900	pCi/g	1					
Rad Gamma Spec												
Gamma I129, solid												
Iodine-129	U	ND	+/-0.135	0.178	1.00	pCi/g	1	SRB	03/03/00	1313	11821	5
Gammaspec, Gamma, solid												
Americium-241	U	ND	+/-0.0579	0.101	4.00	pCi/g	1	SRB	03/05/00	2313	12443	6
Beryllium-7	U	ND	+/-0.0821	0.156	1.00	pCi/g	1					
Cesium-134	U	ND	+/-0.00858	0.0134	0.100	pCi/g	1					
Cesium-137		0.109	+/-0.0197	0.0157	2.30	pCi/g	1					
Cobalt-57	U	ND	+/-0.00541	0.0103	0.100	pCi/g	1					
Cobalt-60	U	ND	+/-0.00811	0.0151	0.100	pCi/g	1					
Europium-152	U	ND	+/-0.022	0.0391	4.80	pCi/g	1					
Europium-154	U	ND	+/-0.0259	0.0506	17.0	pCi/g	1					
Europium-155	U	ND	+/-0.0226	0.0452	0.200	pCi/g	1					
Manganese-54	UJ	ND	+/-0.0122	0.0147	0.100	pCi/g	1					
Radium-226		0.137	+/-0.0393	0.0294	1.00	pCi/g	1					
Sodium-22	U	ND	+/-0.00932	0.0182	0.700	pCi/g	1					
Vanadium-48	U	ND	+/-0.026	0.0456	1.00	pCi/g	1					
Zinc-65	U	ND	+/-0.020	0.0311	0.200	pCi/g	1					
Rad Gas Flow												
GFPC, Gross A/B, solid												
Alpha		1.52	+/-0.400	0.410	1.00	pCi/g	1	TMC	03/10/00	0124	11755	7
Beta		2.32	+/-0.567	0.858	1.00	pCi/g	1					
GFPC, Sr90, solid												
Strontium-90	U	ND	+/-0.950	2.30	7.50	pCi/g	1	AAK	03/01/00	1702	13236	8

Certificate of Analysis

Company : Brookhaven National Laboratory
Address : OER
Building 51M
Upton, NY 11973-5000
Contact: Ms. Anna Bou
Project: Routine Analytical

Report Date: April 18, 2000

Client Sample ID: 065-005000208-30
Sample ID: 21746005

Project: BRKL00297
Client ID: BRKL001
COC: 6345

Parameter	Qualifier	Result		DL	RL	Units	DF	Analyst	Date	Time	Batch	Method
Rad Liquid Scint												
LSC, Tritium Vacuum, solid												
Tritium	U	ND	+/-1.20	2.12	2.00	pCi/g	1	FDP	03/10/00	0950	13505	9
Liquid Scint C14, solid												
Carbon-14	UJ	ND	+/-0.130	0.217	1.00	pCi/g	1	KDA	03/16/00	1040	12078	10
Liquid Scint Ni63, solid												
Nickel-63	U	ND	+/-1.45	3.52	2.00	pCi/g	1	AEA	03/21/00	0542	14568	11
Liquid Scint Tc99, solid												
Technetium-99	U	ND	+/-0.271	0.727	5.00	pCi/g	1	AEA	02/21/00	2122	11952	12

The following Prep Methods were performed

Method	Description	Analyst	Date	Time	Prep Batch
Ash Soil Prep	Ash Soil Prep EPI A-021,A-021B,A-026	CRS	02/15/00	1035	11749
Dry Soil Prep	Dry Soil Prep EPI A-021,A-021B,A-026	CRS	02/14/00	1237	11509

The following Analytical Methods were performed

Method	Description
1	DOE EML HASL 300
2	DOE EML HASL 300
3	DOE EML HASL 300
4	DOE EML HASL 300
5	LANL EM-9
6	DOE EML HASL 300
7	EPA 900
8	EPA 905.0
9	EPA 906.0
10	EPA 504.1
11	DOE RESL Ni-1
12	DOE EML HASL 300

Notes:
The Qualifiers in this report are defined as follows :

- * Indicates that a quality control analyte recovery is outside of specified acceptance criteria.
- ** Indicates the analyte is a surrogate compound.
- DL Failed required detection limit.
- J Indicates an estimated value. The result was greater than the detection limit, but less than the reporting limit.

Certificate of Analysis

Company : Brookhaven National Laboratory
Address : OER
Building 51M
Upton, NY 11973-5000
Contact: Ms. Anna Bou
Project: Routine Analytical

Report Date: April 18, 2000

Client Sample ID: 065-005000208-30
Sample ID: 21746005

Proiect: BRKL00297
Client ID: BRKL001
COC: 6345

Parameter	Qualifier	Result	DL	RL	Units	DF	AnalystDate	Time	Batch	Method

RI Not quantified due to interference.
U Indicates the compound was analyzed for but not detected above the detection limit
U Sample result < .5*MDA and MDA <= RDL.
UJ .5*MDA < Sample result < MDA and MDA <= RDL.
UJ-Q Not quantified due to low abundance.

The above sample is reported on an "as received" basis.

This data report has been prepared and reviewed in accordance with General Engineering Laboratories, Inc. standard operating procedures. Please direct any questions to your Project Manager, Nancy Slater at 843-556-8171 Ext. 4438 .

Reviewed by

Certificate of Analysis

Company : Brookhaven National Laboratory
Address : OER
Building 51M
Upton, NY 11973-5000
Contact: Ms. Anna Bou
Project: Routine Analytical

Report Date: April 18, 2000

Client Sample ID: 065-006000208-30
Sample ID: 21746006
Matrix: Soil
Collect Date: 08-FEB-00 15:52
Receive Date: 12-FEB-00 12:00
Collector: Client

Project: BRKL00297
Client ID: BRKL001
COC: 6345

Parameter	Qualifier	Result		DL	RL	Units	DF	Analyst	Date	Time	Batch	Method
Rad Alpha Spec												
Alphaspec Am241, Cm, solid												
Americium-241	U	ND	+/-0.102	0.194	1.00	pCi/g	1	JAL	03/01/00	2235	12552	1
Alphaspec Pu, solid												
Plutonium-238	U	ND	+/-0.115	0.299	6.60	pCi/g	1	JAL	03/02/00	2223	12554	2
Plutonium-239/240	U	ND	+/-0.0597	0.155	4.00	pCi/g	1					
Alphaspec Th, solid												
Thorium-228	U	ND	+/-0.0684	0.194	1.00	pCi/g	1	JAL	03/03/00	0752	12558	3
Thorium-230		0.149	+/-0.115	0.149	1.00	pCi/g	1					
Thorium-232	UJ	ND	+/-0.0879	0.121	1.00	pCi/g	1					
Alphaspec U, solid												
Uranium-233/234	U	ND	+/-0.080	0.146	0.900	pCi/g	1	JAL	03/02/00	2236	12555	4
Uranium-235/236	U	ND	+/-0.0362	0.0986	0.900	pCi/g	1					
Uranium-238	U	ND	+/-0.0703	0.118	0.900	pCi/g	1					
Rad Gamma Spec												
Gamma I129, solid												
Iodine-129		0.328	+/-0.156	0.220	1.00	pCi/g	1	SRB	03/03/00	1424	11821	5
Gammaspec, Gamma, solid												
Americium-241	U	ND	+/-0.0486	0.0917	4.00	pCi/g	1	SRB	03/05/00	2318	12443	6
Beryllium-7	U	ND	+/-0.0993	0.157	1.00	pCi/g	1					
Cesium-134	U	ND	+/-0.00849	0.0141	0.100	pCi/g	1					
Cesium-137		0.0754	+/-0.0219	0.0152	2.30	pCi/g	1					
Cobalt-57	U	ND	+/-0.00519	0.0101	0.100	pCi/g	1					
Cobalt-60	U	ND	+/-0.00859	0.0157	0.100	pCi/g	1					
Europium-152	U	ND	+/-0.0215	0.0381	4.80	pCi/g	1					
Europium-154	U	ND	+/-0.0232	0.0425	17.0	pCi/g	1					
Europium-155	U	ND	+/-0.022	0.0441	0.200	pCi/g	1					
Manganese-54	U	ND	+/-0.00841	0.0157	0.100	pCi/g	1					
Radium-226		0.167	+/-0.0434	0.0267	1.00	pCi/g	1					
Sodium-22	U	ND	+/-0.00836	0.0154	0.700	pCi/g	1					
Vanadium-48	U	ND	+/-0.0246	0.0387	1.00	pCi/g	1					
Zinc-65	U	ND	+/-0.0217	0.0346	0.200	pCi/g	1					
Rad Gas Flow												
GFPC, Gross A/B, solid												
Alpha		1.65	+/-0.375	0.314	1.00	pCi/g	1	TMC	03/10/00	0124	11755	7
Beta		2.78	+/-0.532	0.774	1.00	pCi/g	1					
GFPC, Sr90, solid												
Strontium-90	U	ND	+/-0.637	1.69	7.50	pCi/g	1	AAK	03/01/00	1702	13236	8

Certificate of Analysis

Company : Brookhaven National Laboratory
Address : OER
Building 51M
Upton, NY 11973-5000
Contact: Ms. Anna Bou
Project: Routine Analytical

Report Date: April 18, 2000

Client Sample ID: 065-006000208-30
Sample ID: 21746006

Project: BRKL00297
Client ID: BRKL001
COC: 6345

Parameter	Qualifier	Result		DL	RL	Units	DF	Analyst	Date	Time	Batch	Method
Rad Liquid Scint												
LSC, Tritium Vacuum, solid												
Tritium	U	ND	+/-0.956	1.61	2.00	pCi/g	1	FDP	03/10/00	1022	13505	9
Liquid Scint C14, solid												
Carbon-14	U	ND	+/-0.127	0.217	1.00	pCi/g	1	KDA	03/16/00	1112	12078	10
Liquid Scint Ni63, solid												
Nickel-63	U	ND	+/-1.56	3.79	2.00	pCi/g	1	AEA	03/21/00	0629	14568	11
Liquid Scint Tc99, solid												
Technetium-99	U	ND	+/-0.327	0.850	5.00	pCi/g	1	AEA	02/21/00	2155	11952	12

The following Prep Methods were performed

Method	Description	Analyst	Date	Time	Prep Batch
Ash Soil Prep	Ash Soil Prep EPI A-021,A-021B,A-026	CRS	02/15/00	1035	11749
Dry Soil Prep	Dry Soil Prep EPI A-021,A-021B,A-026	CRS	02/14/00	1237	11509

The following Analytical Methods were performed

Method	Description
1	DOE EML HASL 300
2	DOE EML HASL 300
3	DOE EML HASL 300
4	DOE EML HASL 300
5	LANL EM-9
6	DOE EML HASL 300
7	EPA 900
8	EPA 905.0
9	EPA 906.0
10	EPA 504.1
11	DOE RESL Ni-1
12	DOE EML HASL 300

Notes:
The Qualifiers in this report are defined as follows :

- * Indicates that a quality control analyte recovery is outside of specified acceptance criteria.
- ** Indicates the analyte is a surrogate compound.
- DL Failed required detection limit.
- J Indicates an estimated value. The result was greater than the detection limit, but less than the reporting limit.

Certificate of Analysis

Company : Brookhaven National Laboratory
Address : OER
Building 51M
Upton, NY 11973-5000
Contact: Ms. Anna Bou
Project: Routine Analytical

Report Date: April 18, 2000

Client Sample ID: 065-006000208-30
Sample ID: 21746006

Project: BRKL00297
Client ID: BRKL001
COC: 6345

Parameter	Qualifier	Result	DL	RL	Units	DF	Analyst	Date	Time	Batch	Method

RI Not quantified due to interference.
U Indicates the compound was analyzed for but not detected above the detection limit
U Sample result < .5*MDA and MDA <= RDL.
UJ .5*MDA < Sample result < MDA and MDA <= RDL.
UJ-Q Not quantified due to low abundance.

The above sample is reported on an "as received" basis.

This data report has been prepared and reviewed in accordance with General Engineering Laboratories, Inc. standard operating procedures. Please direct any questions to your Project Manager, Nancy Slater at 843-556-8171 Ext. 4438 .

Reviewed by

Certificate of Analysis

Company : Brookhaven National Laboratory
Address : OER
Building 51M
Upton, NY 11973-5000
Contact: Ms. Anna Bou
Project: Routine Analytical

Report Date: April 18, 2000

Client Sample ID: 065-007000208-30
Sample ID: 21746007
Matrix: Soil
Collect Date: 08-FEB-00 16:05
Receive Date: 12-FEB-00 12:00
Collector: Client

Project: BRKL00297
Client ID: BRKL001
COC: 6345

Parameter	Qualifier	Result		DL	RL	Units	DF	Analyst	Date	Time	Batch	Method
Rad Alpha Spec												
Alphaspec Am241, Cm, solid												
Americium-241	U	ND	+/-0.0761	0.178	1.00	pCi/g	1	JAL	03/01/00	2235	12552	1
Alphaspec Pu, solid												
Plutonium-238	U	ND	+/-0.0369	0.0822	6.60	pCi/g	1	JAL	03/02/00	2228	12554	2
Plutonium-239/240	U	ND	+/-0.0213	0.0596	4.00	pCi/g	1					
Alphaspec Th, solid												
Thorium-228		0.185	+/-0.124	0.178	1.00	pCi/g	1	JAL	03/03/00	0752	12558	3
Thorium-230		0.123	+/-0.0851	0.0805	1.00	pCi/g	1					
Thorium-232		0.165	+/-0.0979	0.0683	1.00	pCi/g	1					
Alphaspec U, solid												
Uranium-233/234		0.206	+/-0.107	0.0952	0.900	pCi/g	1	JAL	03/02/00	2236	12555	4
Uranium-235/236	U	ND	+/-0.0217	0.120	0.900	pCi/g	1					
Uranium-238		0.0972	+/-0.0696	0.0365	0.900	pCi/g	1					
Rad Gamma Spec												
Gamma I129, solid												
Iodine-129	U	ND	+/-0.184	0.212	1.00	pCi/g	1	SRB	03/04/00	1316	11821	5
Gammaspec, Gamma, solid												
Americium-241	U	ND	+/-0.0274	0.0464	4.00	pCi/g	1	SRB	03/06/00	0815	12443	6
Beryllium-7	U	ND	+/-0.103	0.188	1.00	pCi/g	1					
Cesium-134	U	ND	+/-0.0123	0.0195	0.100	pCi/g	1					
Cesium-137		0.161	+/-0.0323	0.0188	2.30	pCi/g	1					
Cobalt-57	U	ND	+/-0.00708	0.0131	0.100	pCi/g	1					
Cobalt-60	U	ND	+/-0.0117	0.021	0.100	pCi/g	1					
Europium-152	U	ND	+/-0.0316	0.0503	4.80	pCi/g	1					
Europium-154	U	ND	+/-0.0345	0.0624	17.0	pCi/g	1					
Europium-155	U	ND	+/-0.0273	0.0491	0.200	pCi/g	1					
Manganese-54	U	ND	+/-0.0113	0.0198	0.100	pCi/g	1					
Radium-226		0.150	+/-0.0499	0.0372	1.00	pCi/g	1					
Sodium-22	U	ND	+/-0.0124	0.0225	0.700	pCi/g	1					
Vanadium-48	U	ND	+/-0.0323	0.0568	1.00	pCi/g	1					
Zinc-65	U	ND	+/-0.0316	0.0499	0.200	pCi/g	1					
Rad Gas Flow												
GFPC, Gross A/B, solid												
Alpha		2.44	+/-0.496	0.467	1.00	pCi/g	1	TMC	03/10/00	0124	11755	7
Beta		3.87	+/-0.623	0.877	1.00	pCi/g	1					
GFPC, Sr90, solid												
Strontium-90	U	ND	+/-1.35	3.11	7.50	pCi/g	1	AAK	03/01/00	1702	13236	8

Certificate of Analysis

Company : Brookhaven National Laboratory
Address : OER
Building 51M
Upton, NY 11973-5000
Contact: Ms. Anna Bou
Project: Routine Analytical

Report Date: April 18, 2000

Client Sample ID: ^o5-007000208-30
Sample ID: 21746007

Project: BRKL00297
Client ID: BRKL001
COC: 6345

Parameter	Qualifier	Result		DL	RL	Units	DF	Analyst	Date	Time	Batch	Method
Rad Liquid Scint												
LSC, Tritium Vacuum, solid												
Tritium	UJ	ND	+/-1.35	2.24	2.00	pCi/g	1	AEA	03/14/00	1740	15504	9
Liquid Scint C14, solid												
Carbon-14		1.60	+/-0.777	1.29	1.00	pCi/g	1	KDA	03/17/00	2248	12078	10
Liquid Scint Ni63, solid												
Nickel-63	U	ND	+/-1.73	4.22	2.00	pCi/g	1	AEA	03/21/00	0716	14568	11
Liquid Scint Tc99, solid												
Technetium-99	U	ND	+/-0.345	0.964	5.00	pCi/g	1	AEA	02/21/00	2227	11952	12

The following Prep Methods were performed

Method	Description	Analyst	Date	Time	Prep Batch
Ash Soil Prep	Ash Soil Prep EPI A-021,A-021B,A-026	CRS	02/15/00	1035	11749
Dry Soil Prep	Dry Soil Prep EPI A-021,A-021B,A-026	CRS	02/14/00	1237	11509

The following Analytical Methods were performed

Method	Description
1	DOE EML HASL 300
2	DOE EML HASL 300
3	DOE EML HASL 300
4	DOE EML HASL 300
5	LANL EM-9
6	DOE EML HASL 300
7	EPA 900
8	EPA 905.0
9	EPA 906.0
10	EPA 504.1
11	DOE RESL Ni-1
12	DOE EML HASL 300

Notes:
The Qualifiers in this report are defined as follows :

- * Indicates that a quality control analyte recovery is outside of specified acceptance criteria.
- ** Indicates the analyte is a surrogate compound.
- DL Failed required detection limit.
- J Indicates an estimated value. The result was greater than the detection limit, but less than the reporting limit.

Certificate of Analysis

Company : Brookhaven National Laboratory
Address : OER
Building 51M
Upton, NY 11973-5000
Contact: Ms. Anna Bou
Project: Routine Analytical

Report Date: April 18, 2000

Client Sample ID: 065-007000208-30
Sample ID: 21746007

Project: BRKL00297
Client ID: BRKL001
COC: 6345

Parameter	Qualifier	Result	DL	RL	Units	DF	Analyst	Date	Time	Batch	Method

RI Not quantified due to interference.
U Indicates the compound was analyzed for but not detected above the detection limit
U Sample result < .5*MDA and MDA <= RDL.
UJ .5*MDA < Sample result < MDA and MDA <= RDL.
UJ-Q Not quantified due to low abundance.

The above sample is reported on an "as received" basis.

This data report has been prepared and reviewed in accordance with General Engineering Laboratories, Inc. standard operating procedures. Please direct any questions to your Project Manager, Nancy Slater at 843-556-8171 Ext. 4438 .

Reviewed by