Department of Energy
Brookhaven Area Office
P.O. Box 5000
Upton, New York 11973

NOV 1 9 2001

RECEIVED
NOV 19 2001
BGRR PROJECT

Mr. Leslie Hill
Brookhaven Science Associates, LLC
Brookhaven National Laboratory
Upton, New York 11973

Dear Mr. Hill:

SUBJECT: APPROVAL OF UNREVIEWED SAFETY ISSUE DETERMINATION/ SAFETY EVALUATION (USID) FOR THE BROOKHAVEN GRAPHITE RESEARCH REACTOR (BGRR) FOR BELOW GRADE DUCT COOLERS REMOVAL (BGRR-SE-01-03)

The Brookhaven Area Office (BAO) has reviewed your request to begin work on Below Ground Duct Coolers Removal. BAO has determined that the actions referenced in USID/SE BGRR-SE-01-03 (Rev.0) comply with the requirements of DOE-EM-STD-5502-94, Hazard Baseline Documentation and DOE-EM-STD-5503-94, EM Health and Safety Plan Guidelines. Therefore, Below Ground Duct Cooler Removal work is authorized.

If you have any questions regarding this matter, please contact Mark Parsons of my staff at extension 7978.

Sincerely,

Robert L. Desmarais, Director
Project Management Division

cc: M. Parsons, BAO
G. Penny, BAO
H. Taylor, BAO
C. Adey, BNL

38287/435.20.1.3

Safety Evaluation Number: **BGRR – SE – 01 – 03** **Revision Number:** 1

Prepared by: S. H. Moss 11/15/01 **Date:** 11/15/01

Description of Proposed Activity: Below Ground Duct Coolers Removal Action

BGRR/ER Baseline Work Package (123) "BGRR Below Ground Duct Filters, Coolers and Soils Removal AOC-9B (Removal Area #3)", dated 4/18/01 [Ref. 8], includes the following activity (as covered by BGRR-046 Action Memorandum [Ref. 19] and/or NEPA-CX No. BNL-361 [Ref. 16]):

1) Removal of the Primary Exhaust Air Cooling Coils

Purpose:

The Brookhaven Graphite Research Reactor (BGRR) has been identified as Area of Concern (AOC) 9 in the Interagency Agreement [Ref. 15] between the Environmental Protection Agency (EPA) Region II, the Department of Energy (DOE), and New York State Department of Environmental Conservation (NYSDEC). This is a Federal Facility Agreement under the *Comprehensive Environmental Response Compensation, and Liability Act of 1980* (CERCLA) Section 120, Administrative Docket Number II-CERCLA-FFA-00201. The Below Ground Duct, Equipment, and Associated Soils are part of the BGRR, which is designated as Sub-AOC 9B (Removal Area #3).

Due to the well-defined contamination associated with the Coolers located within the Below Ground Ducts and the poor condition of the equipment itself, the removal of the Coolers is necessary to prevent potential future contamination of the environment, regardless of the final alternative selected for the remediation of the Below Ground Duct. This is planned to be followed, at a later date, by the removal of; filters, fines/dust/debris, and possibly the liner (if decontamination not feasible). All such supplemental activities would be addressed either by a separate USID/SE or by a revision of the approved version of this USID/SE.

References:

(1) ERD-OPM-4.4, "Safety Evaluations for Unreviewed Safety Issue Determinations", Rev.1 dated 4/20/01.
(2) BGRR-002, "Hazard Classification and Auditable Safety Analysis for Brookhaven Graphite Research Reactor (BGRR) Decommissioning Project", Rev. 3 dated January 19, 2001, as approved by DOE 01/31/01.
(3) BGRR-001, "Brookhaven Graphite Research Reactor (BGRR) Project Management Plan", Rev. 1 dated March 2, 2000.
(4) BNL SBMS Hazard Analysis Subject Area, issued March, 2001. [URL= https://sbms.bnl.gov/standard/2m/2m00t011.htm]
(5) DOE-STD-1027-92, "Hazard Categorization and Accident Analysis Techniques for Compliance with DOE order 5480.23, Nuclear Safety Analysis Reports" Change Notice No. 1, dated September 1997.
(6) LA-12846-MS, "Specific Activities and DOE-STD-1027-92 Hazard Category 2 Thresholds", LANL Fact Sheet issued November 1994.
(7) LA-12981-MS, "Table of DOE-STD-1027-92 Hazard Category 3 Threshold Quantities for the ICRP-30 List of 757 Radionuclides", LANL Fact Sheet issued August 1995.
(8) BGRR/ER Baseline Work Package (123) "BGRR Below Ground Duct Filters, Coolers and Soils Removal AOC-9B (Removal Area #3)", dated 4/18/01.
(9) BGRR-047, "Job Safety Analysis for Below Ground Duct Coolers Removal Action", Rev. 1 dated 11/15/01 (included as Attachment 1).
(10) EM-BGRR-TP-01-09, "Technical Work Document for Coolers Removal Action", Rev. 1 dated 11/15/01 (included as Attachment 2).
(11) BGRR-SE-01-02, "Lower Canal, Water Treatment House, Equipment and Associated Soils-Removal Actions, as approved by DOE 07/17/01.
(12) NUREG/CR-0672, "Technology, Safety and Costs of Decommissioning a Reference Boiling Water Reactor Power Station", June 1980.

(13) Long Island Power Authority – Shoreham Nuclear Power Station – NRC Docket No. 50-322, "Updated Decommissioning Plan", February 1993.
(14) Brookhaven Graphite Research Reactor Decommissioning Project Health and Safety Plan (HASP)-BGRR-0006, dated September, 1999.
(15) BNL FFA under CERCLA Section 120, February 28, 1999 [IAG between U.S. EPA – Region II, U.S. DOE and NYSDEC].
(16) NEPA-CX No. BNL-361, "BGRR Stabilization, Isolation and Maintenance Activities", signed off by DOE 9/16/99.
(17) BGRR-SE-99-04, Above Ground Duct Removal, as approved by DOE 06/08/00.
(18) EM-BGRR-01-08, "Technical Work Document - Characterization and Sampling Analysis for the Below Ground Duct and Associated Soils", Rev. 0 dated August 08, 2001.
(19) BGRR-046, Rev. B, "Draft Action Memorandum – Brookhaven Graphite Research Reactor Coolers and Filters Removal Action", dated October 16, 2001.

SCREENING CRITERIA

Safety Function(s) of Systems Affected

1. Will the proposed activity affect the safety function(s) or failure mode(s) of the equipment/facility? Y (N) N/A

Because of its defunct status and defueled state, the BGRR has no current requirements for redundant systems and/or safety class or safety significant SSCs (Systems, Structures and Components). Therefore, no safety functions exist that are directly associated with current components or equipment considered part of the scope of the BGRR Decommissioning Project. Where no safety functions exist, there can be NO effect on the safety function by the proposed activity.

The Below Ground Duct Coolers were shutdown after all BGRR fuel was removed from BNL site in 1972. They no longer serve the purpose for which they were designed and constructed. Hence, they may be considered as being Out-Of-Service or failed. No deconstruction/decommissioning activities or potential accidents associated with such activities can have any negative effect on the ability of the Coolers to perform their original functions, which are obsolete.

The proposed activity will not affect the safety function(s) of the facility [as there are none]; it will not affect the failure mode(s) of the equipment/facility, as the equipment/facility was previously and permanently shutdown. The answer to Question 1 of Safety Function(s) of System Affected is **'NO'**.

2. Will any new failure modes be introduced by the proposed activity? (Y) N N/A

BGRR-002, "Hazard Classification and Auditable Safety Analysis for the BGRR Decommissioning Project", Rev. 3 dated January 19, 2001 [Ref. 2], was approved by DOE on 01/31/01. It specifically excludes from review or consideration the impact of contamination removal activities directly associated with the decommissioning process. Guidance for the selection of appropriate failure modes to consider was taken from other decommissioning projects [Refs. 12 & 13], as well as previously approved USID/SEs associated with the Brookhaven Graphite Research Reactor Decommissioning Project [Refs. 11, 17]. The failure modes selected and associated accidents analyzed were; Crane Load Drop, Waste Container Drop, Contaminated Waste Bag Rupture/Fire, Explosion of LPG Leaked from a Forklift, Oxyacetylene Explosion, Contamination Control Envelope Rupture, and Vacuum Filter Bag Rupture.

Neither the BGRR Job Safety Analysis for the Below Ground Duct Coolers Removal Action [Ref. 9], nor the BGRR Technical Work Document - Coolers Removal Action [Ref. 10]; preclude the use of any of the above listed equipment (except for barring the flame cutting of contaminated items). Therefore, none of the accident scenarios listed above can be discounted at face value. Based on the physical characteristics of the materials to be removed (concrete dust, metal, fiberglass, fines and soil), Combustible Waste Fire was deemed not a credible accident scenario.

With respect to the BGRR-ASA, the proposed activity represents a new activity, with its own unique spectrum of potential failure modes. Specifically, the proposed activity (as covered by Action Memorandum BGRR-046 and/or NEPA-CX No. BNL-361) represents an activity not covered by the BGRR-ASA (per Table 1.4-1 – ASA Applicability Table of Section 1.4 – Scope of Work).

As the proposed activity is specifically defined as being outside the scope of the BGRR-ASA and consists of removal and remediation activities to be performed under a CERCLA Time Critical Removal Action, it may well introduce new failure modes not previously considered under the BGRR-ASA. The answer to Question 2 of the Safety Function(s) of System Affected is 'YES'.

Effects on Safety

1. Could the proposed activity increase the probability of occurrence of an accident previously evaluated in the ABD? Y (N) N/A

The Brookhaven Graphite Research Reactor - Decommissioning Project Authorization Basis Documents include; the BGRR-ASA, Rev.3 (which was approved by DOE 01/31/01), the DOE Safety Evaluation Report as approved 01/30/01, the ERD Quality Assurance Implementation Guidelines, BGRR-DP Environment, Health and Safety Plan, and all DOE-approved USID/SEs for the BGRR-DP. Of those documents, only the BGRR-ASA contains original accident analysis data (the DOE-SER reiterates and amplifies on the contents of the ASA, but includes no new accident scenarios, nor changes to the ones in the BGRR-ASA).

Though the BGRR-ASA accident analysis excludes actual D&D work-related accidents; it must still be reviewed for the potential impact of the proposed activity on the probability of occurrences for the accident scenarios contained within the BGRR-ASA. Because of the "Routine Risk" status of the defueled BGRR (classified as a "Radiological Facility"), a rigorous probabilistic risk assessment was not required as part of the Auditable Safety Analysis. Instead, using a graded approach and guidance originally offered in BNL ES&H Standard 1.3.3, "Safety Analysis Reports / Safety Assessment Documents", which was subsequently replaced by the BNL SBMS Subject Area, "Hazard Analysis" [Ref. 4], the Risk Assessment Tables of Section 3.2 of the BGRR-ASA were developed.

Among the events analyzed in BGRR-ASA Section 3.2 – Risk Assessment are; Seismic Event, High Winds, Graphite Dust Detonation, Loss of Pile Negative Pressure System Ventilation, Loss of Pile Negative Pressure System Filtration, Crane Load Drop, Fire, Facility Worker Exposure to Toxic Material.

The proposed activity has no capability to impact the probability of occurrence of Seismic Events or High Winds (which are natural phenomena). Additionally, as the proposed activity is limited to the removal actions on the Below Ground Duct Coolers; it has no potential to impact the probability of events occurring at other local buildings e.g., Buildings 701 & 702. This eliminates from further consideration; Graphite Dust Detonation, Loss of Pile Negative Pressure System Ventilation, Loss of Pile Negative Pressure System Filtration, and Building 701 Crane Load Drop. The only remaining accident scenarios from the BGRR-ASA to be considered are: Risk Assessment No. 007, covering Fire; and Risk Assessment No. 008, covering Facility Workers Exposure to Toxic / Hazardous Materials.

The proposed activity involves the potential for radiological exposure by removal (including cutting) of contaminated equipment. There are no significant amounts of combustible materials involved and primarily mechanical means will be used for separation (flame cutting, while specifically excluded only for contaminated material, is not expected to play a major role). The accident analysis of the proposed activity includes three accident scenarios, which already and independently address the potential for initiation of fire. These events are; Oxyacetylene Explosion, Explosion of LPG Leaked from a Forklift and Contaminated Waste Bag Rupture/Fire. The proposed activity, having its own fire probability assessment, represents no increase in the probability of fire as defined in BGRR-ASA Risk Assessment No.7.

Finally, as 'Potential Initiators' under Risk Assessment No. 008 covering Facility Worker Exposure to Toxic/Hazardous Materials are; natural phenomenon, operator error, or equipment failure causing breach of

deactivated piping or equipment containing residual hazardous/toxic material. The only BGRR-DP workers or Sub-contractor workers are those directly involved in the decommissioning process, including the performance of the proposed activity. Therefore, the proposed activity does not increase the probability of occurrence of this event. It merely reflects one of the potential initiators of this event. The proposed activity represents no increase in the probability of occurrence of the event as defined in BGRR-ASA Risk Assessment No. 008.

So the answer to Question 1 of 'Effects on Safety' is **'NO'**.

The proposed activity does not increase the probability of any accident evaluated in the Authorization Basis Documentation.

2. Could the proposed activity increase the probability of occurrence of a malfunction of equipment, systems, or components that are Important-to-Safety? Y (N) N/A

As was already discussed in response to Screening Criterion No. 1 under 'Safety Function(s) of Systems Affected'; the BGRR has no current requirements for redundant systems and/or safety class or safety significant SSCs (Systems, Structures and Components) due to its defunct status and defueled state. Therefore, no safety functions exist that are directly associated with the proposed activity covered by this USID/SE. Without equipment, systems or components that are Important-to-Safety, there can be no probability of occurrence of a malfunction of equipment, systems or components that are Important-to-Safety; nor any increase in same.

The proposed activity **COULD NOT** increase the probability of occurrence of a malfunction of equipment, systems or components that are Important-to-Safety.

3. Could the proposed activity create the possibility of an accident of a different type than those previously evaluated in the ABD? (Y) N N/A

As already discussed in the response to Screening Criterion No. 2 under 'Safety Function(s) of Systems Affected', the answer to this question is **'YES'**. However, the consequences of any such accident, based on the limited source term potentially involved, are bounded under the consequences of accidents presented in the BGRR-ASA and other already approved USID/SEs, through a comparison of maximum projected releases.

Based upon prior DOE comment and the limited inventory of radiological material at risk (See Appendix A – Source Term Development), the complete accident analysis is not included for review. Instead, the release of the entire inventory is assumed as a consequence of any significant accident. This would result in a dose of less than 31 mrem to an individual located at 30 meters for 24 hours, per the guidance of DOE-STD-1027-92. This is orders of magnitude lower than the dose consequences of the accidents considered in the BGRR-ASA [Max. Dose @ 4.25 rem], as well as those of previously approved BGRR USID/SEs [Max. Dose from BGRR-SE-99-04 @ 70 mrem; Max. Dose from BGRR-SE-01-02 @ 215 mrem].

4. Could the proposed activity create the possibility of an equipment, system, or component malfunction of a different type than those previously evaluated in the ABD? (Y) N N/A

As already discussed in the response to Screening Criterion No. 2 under 'Safety Function(s) of Systems Affected', the answer to this question is **'YES'**. However, the consequences of any such malfunction, as discussed above, are bounded under the consequences of accidents presented in the BGRR-ASA, and other approved BGRR USID/SEs.

5. Does the proposed activity reduce the Margin-of-Safety as defined in the basis for any ABD? Y (N) N/A

In ERD-OPM-4.4 [Ref. 1], the procedure states, "In the context of this procedure a Margin-of-Safety is reduced if the Safety Limit or Limiting Condition of Operation or Administrative Control as defined in the Authorization Basis Document(s) is violated". As this safety evaluation is based upon the guidance provided in the above referenced procedure, that definition of Margin-of-Safety compels the answer **'NO'**.

The proposed activity **DOES NOT** reduce the Margin-of-Safety as defined in the BGRR-ASA. The work is being reviewed under the USI process prior to authorization, and will not violate any of the Administrative Controls already contained in the BGRR-ASA, as long as the work is performed as described in the task specific Technical Work Document and the Job Safety Analysis [Refs. 9 and 10]

Authorization Basis Document(s) Changes

1. Is a change to the facility ABD(s) being made? (Y) N N/A

The BGRR-ASA refers to the performance of work outside the scope of the ASA as requiring the use of the USI process as defined in ERD-OPM-4.4 [Ref. 1]. The proposed activity covered here specifically falls under that classification (see ASA Table 1.4-1 – ASA Applicability Table, for CERCLA Removal Actions). The completed and approved USID/SE for the proposed activity should be considered as an addendum and amendment to the BGRR-ASA.

Therefore, it does constitute a change to the BGRR-ASA and requires the approval of the Brookhaven Area Office, Program Management Division Director, prior to implementation. The answer to Question 1 under 'Authorization Basis Document(s) Changes' is **'YES'**.

SAFETY EVALUATION CONCLUSION

Based on the evaluation of the evidence cited above, the issue --

_____ Does NOT constitute an Unreviewed Safety Issue.

__✓__ Does constitute an Unreviewed Safety Issue.

**** IF ANY OF THE ABOVE ARE <u>YES</u>, THEN A USI EXISTS. ****

11/15/01
BGRR Project Engineer Signature/ Date

11/15/01
EMD ES&H Programs Mgr Signature/ Date

11/15/01
BGRR Project Manager Signature/ Date

11-15-01
EMD Quality Assurance Mgr Signature/ Date

APPENDIX A

SOURCE TERM DEVELOPMENT

BGRR-SE-01-03 Source Term Inventory - Coolers

as of 11/15/01

RADIO-NUCLIDE	HALF LIFE [Yr] (1)	TOTAL ACTIVITY [Ci] (2)	HAZ.CAT. 3 THRESHOLD [Ci] (3)	HAZ.CAT. 3 FRACTION (4)	HAZ.CAT. 2 THRESHOLD [Ci] (1)	HAZ.CAT. 2 FRACTION (5)
003H	1.23E+01	1.44E-05	1.60E+04	9.02E-10	2.90E+05	4.98E-11
014C	5.73E+03	1.38E-05	4.20E+02	3.28E-08	1.38E+06	9.97E-12
055Fe	2.70E+00	1.85E-07	5.40E+03	3.43E-11	1.11E+07	1.67E-14
060Co	5.27E+00	7.41E-05	2.80E+02	2.64E-07	1.92E+05	3.85E-10
063Ni	1.00E+02	6.63E-04	5.40E+03	1.23E-07	4.54E+06	1.46E-10
090Sr	2.88E+01	1.27E-02	1.60E+01	7.94E-04	2.21E+04	5.75E-07
090Y	7.31E-03	1.27E-02	1.42E+03	8.95E-06	4.30E+05	2.95E-08
099Tc	2.14E+05	9.26E-05	1.70E+03	5.45E-08	3.88E+06	2.38E-11
129I	1.57E+07	2.26E-05	6.00E-02	3.77E-04	4.30E+05	5.26E-11
137Cs	3.02E+01	1.48E-02	6.00E+01	2.47E-04	8.65E+04	1.71E-07
152Eu	1.30E+01	4.13E-05	2.00E+02	2.07E-07	1.36E+05	3.04E-10
154Eu	8.50E+00	1.69E-05	2.00E+02	8.44E-08	1.15E+05	1.47E-10
155Eu	4.90E+00	2.90E-05	9.40E+02	3.08E-08	7.53E+05	3.85E-11
226Ra	1.60E+03	2.88E-05	1.20E+01	2.40E-06	5.50E+01	5.24E-07
232Th	1.41E+10	3.72E-06	1.00E-01	3.72E-05	1.75E+01	2.13E-07
234U	2.45E+05	1.47E-04	4.20E+00	3.49E-05	2.22E+02	0.00E+00
235U	7.04E+08	1.67E-05	4.20E+00	3.98E-06	2.38E+02	7.03E-08
238U	4.47E+09	9.34E-06	4.20E+00	2.22E-06	2.39E+02	3.91E-08
238Pu	8.77E+01	1.13E-05	6.20E-01	1.83E-05	6.17E+01	1.84E-07
239Pu	2.44E+04	3.13E-04	5.20E-01	6.02E-04	5.52E+01	5.67E-06
240Pu	6.57E+03	3.13E-04	5.20E-01	6.02E-04	5.60E+01	5.58E-06
241Pu	1.44E+01	8.97E-04	3.20E+01	2.80E-05	2.89E+03	3.11E-07
241Am	4.33E+02	1.33E-04	5.20E-01	2.55E-04	5.48E+01	2.42E-06
SUM				3.01E-03		1.58E-05

==========> 3.01E+01 mRem for total release

1) Values taken from LA-12846-MS, "Specific Activities and DOE-STD-1027-92 Hazard Category 2 Thresholds"
2) Values as calculated on the following pages.
3) Values taken from LA-12981-MS, "Table of DOE-STD-1027-92 Hazard Category 3 Threshold Quantities for the ICRP-30 list of 757 Radionuclides" (except for Tritium whose value was taken from Change 1 to DOE-STD-1027-92).
4) Values developed by dividing the actual isotopic inventory by the respective Haz Cat 3 Threshold.
5) Values developed by dividing the actual isotopic inventory by the respective Haz Cat 2 Threshold.

Table 2.3.2-1 RESIDUAL BOP INVENTORY BASED ON B&W NEL AND ISOCS RESULTS

NEL ID# / BNL ID# / Material Type / Tot. Weight [lbs] / Tot. Weight [g]	Combined N&S BGD Hxers 3600 1.63E+06	Combined N&S BGD Media 4233 1.92E+06	Combined N&S BGD Mesh 5760 2.61E+06	Combined N&S BGD Fines 2780 1.26E+06	Combined Canal & House Concrete 116960 5.31E+07	*Combined W.T. House Concrete 35200 1.60E+07	*Combined BOP Rad. Inv. Summary [Ci]	Nuclide Specific Cat 3 Threshold	Nuclide Specific Cat 3 Fraction
H-3 [Ci]	8.42E-06	3.42E-03	2.65E-02	2.03E-03	8.44E-04	1.92E-06	3.28E-02	1.60E+04	2.05E-06
C-14 [Ci]	8.04E-06	6.26E-04	4.53E-03	3.95E-04	1.47E-04	3.34E-07	5.71E-03	4.20E+02	1.36E-05
***Fe-55 [Ci]	1.08E-07	1.61E-06	1.18E-05	6.46E-06	1.32E-06	2.20E-07	2.15E-05	5.40E+03	3.98E-09
Co-60 [Ci]	4.32E-05	6.41E-04	4.70E-03	2.57E-03	5.24E-04	8.77E-05	8.56E-03	2.80E+02	3.06E-05
Ni-63 [Ci]	3.87E-04	3.71E-03	6.10E-02	1.88E-02	2.22E-03	5.06E-06	8.61E-02	5.40E+03	1.59E-05
Sr-90 [Ci]	7.41E-03	2.69E+00	1.90E-01	7.53E-02	7.75E-02	1.78E-04	3.04E+00	1.60E+01	1.90E-01
Y-90 [Ci]	7.41E-03	2.69E+00	1.90E-01	7.53E-02	7.75E-02	1.78E-04	3.04E+00	1.42E+03	2.14E-03
Tc-99 [Ci]	5.40E-05	4.90E-04	6.83E-04	4.59E-05	3.35E-05	7.65E-08	1.31E-03	1.70E+03	7.68E-07
I-129 [Ci]	1.32E-05	1.69E-04	2.12E-04	2.27E-05	1.10E-05	2.51E-08	4.29E-04	6.00E-02	7.15E-03
Cs-137 [Ci]	8.65E-03	6.95E+00	2.94E+00	3.14E-01	2.69E-01	6.14E-04	1.05E+01	6.00E+01	1.75E-01
Eu-152 [Ci]	2.41E-05	1.43E-03	3.53E-03	3.76E-04	3.54E-04	5.92E-05	5.78E-03	2.00E+02	2.89E-05
Eu-154 [Ci]	9.85E-06	8.01E-04	1.75E-03	3.13E-05	1.71E-04	2.86E-05	2.80E-03	2.00E+02	1.40E-05
Eu-155 [Ci]	1.69E-05	0.00E+00	0.00E+00	0.00E+00	1.12E-05	1.86E-07	2.82E-05	9.40E+02	3.00E-08
Ra-226 [Ci]	1.68E-05	2.34E-03	1.05E-03	1.88E-04	2.68E-04	2.98E-05	3.89E-03	1.20E+01	3.24E-04
Th-232 [Ci]	2.17E-06	3.26E-05	2.71E-05	3.97E-06	4.91E-06	5.46E-07	7.13E-05	1.00E-01	7.13E-04
U-234 [Ci]	8.56E-05	1.44E-04	4.95E-04	2.88E-04	7.54E-05	8.37E-06	1.10E-03	4.20E+00	2.61E-04
U-235 [Ci]	9.76E-06	7.49E-06	1.98E-05	1.02E-05	3.53E-06	3.92E-07	5.12E-05	4.20E+00	1.22E-05
U-238 [Ci]	5.45E-06	1.10E-04	4.68E-04	3.03E-04	6.64E-05	7.34E-06	9.61E-04	4.20E+00	2.29E-04
Pu-238 [Ci]	6.61E-06	7.01E-04	6.98E-04	3.33E-04	1.30E-04	1.44E-05	1.88E-03	6.20E-01	3.04E-03
Pu-239/40 [Ci]	3.65E-04	3.38E-02	5.20E-02	1.99E-02	7.91E-03	8.78E-04	1.15E-01	5.20E-01	2.21E-01
**Pu-241 [Ci]	5.23E-04	4.84E-02	7.45E-02	2.86E-02	1.13E-02	1.26E-03	1.65E-01	3.20E+01	5.14E-03
Am-241 [Ci]	7.74E-05	1.13E-02	1.11E-02	2.61E-03	1.87E-03	2.08E-04	2.72E-02	5.20E-01	5.23E-02
								SUM	6.57E-01

*For ISOCS only characterization data available for these samples, scaled values were attributed for nuclides other than Co-60, Cs-137, and Am-241.

**Due to limited number of samples analyzed for Pu-241, (Hxers only) all other columns scaled off Hxers.

***Though Fe-55 was not analyzed for in the BOP samples, its values are scaled from those found in the composite pile graphite sample analyzed for Fe-55 (which was below MDA so the MDA value was used).

Table 2.3.2-2 B&W NUCLEAR ENVIRONMENTAL LABORATORY RESULTS OF ANALYSES FOR BALANCE-OF-PLANT

NEL BNL Material Sample Wt.	ID# ID# Type [g]	0008076-06 AD-6 So. Cooler Coils/Mtl 2090.0	0008076-07 AD-9 No. Cooler Coils/Mtl 115.0	0006055-04 AGD-30 N. Filter Mesh 74.5	0006055-01 AGD-31 S. Dust/Fines Floor 430.1	0006055-02 AGD-32 S. Filter Media 104.5	0006055-03 AGD-33 S. Filter Mesh 106.7
H-3	[pCi/g]	5.30E+00	5.01E+00	1.93E+04	1.61E+03	1.78E+03	1.00E+03
C-14	[pCi/g]	5.37 E+00	4.48E+00	3.27E+03	3.13E+02	3.26E+02	1.98E+02
Co-60	[pCi/g]	2.61 E+01	2.68E+01	3.27E+03	2.04E+03	3.34E+02	3.24E+02
Ni-63	[pCi/g]	1.11E+02	3.63E+02	4.29E+04	1.49E+04	1.93E+03	3.81E+03
Sr-90	[pCi/g]	7.34E+03	1.73E+03	5.95E+04	5.97E+04	1.40E+06	8.57E+04
Y-90	[p/Ci/g]	7.34E+03	1.73E+03	5.95E+04	5.97E+04	1.40E+06	8.57E+04
Tc-99	[pCi/g]	3 46E+01	3.15E+01	3.67E+02	3.64E+01	2.55E+02	1.56E+02
I-129	[pCi/g]	9 87E+00	6.26E+00	1.57E+02	1.80E+01	8.82E+01	5.66E+00
Cs-137	[pCi/g]	4.75E+03	5.85E+03	2.06E+06	2.49E+05	3.62E+06	1.89E+05
Eu-152	[pCi/g]	9.73E+00	1.98E+01	2.58E+03	2.98E+02	7.45E+02	1.26E+02
Eu-154	[pCi/g]	5 78E+00	6.29E+00	1.28E+03	2.48E+01	4.17E+02	6.30E+01
Eu-155	[pCi/g]	8.39E+00	1.23E+01	0.00E+00	0.00E+00	0.00E+00	0.00E+00
Ra-226	[pCi/g]	8.92E+00	1.16E+01	6.40E+02	1.49E+02	1.22E+03	1.60E+02
Th-232	[pCi/g]	1 50E+00	1.16E+00	1.74E+01	3.15E+00	1.70E+01	3.31E+00
U-234	[pCi/g]	1.84E+01	8.64E+01	3.09E+02	2.28E+02	7.52E+01	6.98E+01
U-235	[pCi/g]	3 62E+00	8 33E+00	1.16E+01	8.12E+00	3.90E+00	3.58E+00
U-238	[pCi/g]	1 44E+00	5.23E+00	2.90E+02	2.40E+02	5.75E+01	6.86E+01
Pu-238	[pCi/g]	6.15E+00	1.94E+00	4.88E+02	2.64E+02	3.65E+02	4.62E+01
Pu-239/40	[pCi/g]	4.19E+02	2.76E+01	3.70E+04	1.58E+04	1.76E+04	2.80E+03
Pu-241	[pCi/g]	2.67E+02	3.73E+02	Not Measured	Not Measured	Not Measured	Not Measured
Am-241	[pCi/g]	7.13E+01	2.35E+01	8.02E+03	2.07E+03	5.90E+03	4.70E+02
G. Alpha	[pCi/g]	4.63E+02	4.18E+01	6.31E+04	1.91E+04	6.47E+04	3.23E+03
G Beta	[pCi/g]	1.62E+04	7.61E+03	3.12E+06	3.51E+05	6.13E+06	3.64E+05
		ACT vs MDA	ACT vs MDA	ACT vs MDA	ACT vs MDA	ACT vs MDA	ACT vs MDA

BGD Coolers Volume Estimate

as of 11/15/01

Based upon the direct observations of the Field Engineer, the following estimate was made:

1) Coolers

each Cooler Coil Unit consists of 192 tubes @ (24 X 4 X 2 = 192)	9.5 ft OAL.
estimated weight of metal in tubes @	0.265 lb/ft
weight of unit = 192 X 9.5 X 0.265 =	483.36 lbs./unit
there are 6 units per bank (one bank/duct) =	2900.16 lbs./bank
there are 2 ducts ======>	**5800.32 lbs.**

ATTACHMENT 1

BGRR-047

Job Safety Analysis for

BGD Coolers Removal Action

BGRR-047

ERD-BGRR TASK-SPECIFIC
JOB SAFETY ANALYSIS

Project Task: *SEGMENTATION AND REMOVAL PLAN FOR BELOW GROUND DUCT COOLERS*

Walk-through Participants: *D. Farnam*
J. Mohr
S. Musolino
A. Tope

Date: *November 13, 2001*

Reference Documentation:

1. Technical Work Document, EM-BGRR-01-09, Rev. 0
2. Work Permit No. BGRR - WP - 187

Attachments:

A. Emergency Call-out List
B. Health Hazard Analysis Information for Lead

Approved by: Donald J. Farnam

Donald J. Farnam

_____

_____

BGRR SEGMENTATION AND REMOVAL PLAN FOR COOLERS

Task		Steps/Activity	Hazards	Mitigation/Reduction	Comments
1.0	**General Safety**	Apply housekeeping principles in Cooler House and Ducts	Slips, Trips and Falls	Remove unnecessary equipment and materials prior to and during course of job.	
		Walking on uneven surfaces	Slips, Trips and Falls	Remove non-essential materials Install anti-skid material surface Provide handrailings	Present grade is ~ 23^0. Anti-skid material should be placed to floor to minimize potential slipping hazards.
		Control entry to Cooler House and Ducts	Confined Space, Radiological	Post warning signs, placards, and barricades. Confined Space Permit, RWP required	All approved documents shall be in place prior to entry i.e. RWP, work permits, JSA, Hazard Materials Assessment etc.
		Perform Pre Job brief to all affected personnel	Not being adequately familiar with the content and scope of job to include JSA, RWP requirements, TWD precautions & limitations	Conduct group discussion with all workers explaining scope of work discussing the JSA, RWP and other relative documents	Any changes to JSA or TWD made after the USID/SE is approved, must be checked against USID/SE
2.0	**Cooler Duct Cover Removal**	Removal of exterior metal cover	Hand injury from removing screws, sheet metal covers	Use proper tools. Wear cut resistant gloves.	

BGRR SEGMENTATION AND REMOVAL PLAN FOR COOLERS

Task		Steps/Activity	Hazards	Mitigation/Reduction	Comments
3.0	**Confined Space**	Perform an atmospheric evaluation identifying O_2, CO, H_2S and LEL levels	Oxygen deficient, explosive atmosphere.	Maintain forced air ventilation. Continuous atmospheric monitoring, forced ventilation	Cooler Plenum is rated a Class 2C Confined Space. Permit required for entry. Refer to SBMS 2.2.4. No storage of flammable/combustible materials inside the ducts or Cooler house.
4.0	**Cooler Segmentation and Removal**	Cutting and segmenting Coolers	Potential finger/hand laceration in using mechanical equipment Renaulds Disease (excessive vibration to hands)	Clear the work areas of any obstruction. The use of leather work gloves and/or vibra gloves when handling tools.	
		Cutting and segmenting Coolers. Oxyacetylene use	Pb, Cu, radiological isotopes - ^{60}Co, ^{137}Cs, ^{90}Sr, ^{241}Am, ^{234}U, ^{235}U, ^{238}Pu, ^{239}Pu, ^{241}Pu Unstable atmospheric environment.	Minimize any airborne particulate generated by the use of sawsalls used at a moderated speed. Personnel will be in Pb protocol program. Personnel air sampling for Pb will be performed. Store oxyacetylene cylinders away from ducts and Cooler House. Post fire watch if the use of oxyacetylene is realized.	See health hazard analysis information on lead (Attachment B). If any dust is generated. Consult IH/IS Rep. Ref. RWP 01-BGRR-62 & 64 Any non-radiological work requiring the use of oxyacetylene should be performed in an outside environment.

BGRR SEGMENTATION AND REMOVAL PLAN FOR COOLERS

5.0	**Material Handling**	Use of mechanized transport system Forklift	Static position, Loading, removing material. Improper lifting techniques. Accessing and loading B-12 containers	Cut and bag cooler sections first. When sufficient inventory is generated, secure cutting and load cart. Upon hauling, all personnel in duct to stay clear of cart pathway. Observe access path leading up to Cooler house. Exercise caution when picking up B-12 containers. Ensure load is distributed evenly on forklift.	Load segmented material into a mobile container with tow hitch. Use a winch/pulley system to transport cart up and out of duct. Remove material and place into B-12 bin. The safe loading and transporting of B-12 containers away from Cooler house is a critical step in this project. Evaluate load distribution of container prior to movement.
6.0	**Electrical**	Use of approved electrical equipment within a confined space. Use of GFCI Housekeeping	Sparking of tools in an unstable atmosphere Potential wet conditions. Electrical cords placed on ground present tripping hazards.	The use of approved tools/equipment rated for use in a confined space. Inspect the equipment before using. Use of GFCI required for all electrical tools/equipment. Maintain walking surfaces free of tripping hazards	
7.0	**Ventilation**	HEPA Ventilation	Control of airborne radioactivity in the work area and prevention of release to the environment.	Ventilation flow path, from duct opening, past workers and coolers.	The supplemental HEPA will increase the in leakage flow to the duct by approximately 1600 cfm.

BGRR SEGMENTATION AND REMOVAL PLAN FOR COOLERS					
8.0	**Respiratory Protection**	Required throughout all activities until further evaluated by the IH/IS Rep, FS Rep. and the FE	Lead, radiological	Pb protocol required prior to and after scope of work, Pb monitoring required, HEPA Filtration.	Consult IH/IS Rep. and FS Rep. for air monitoring evaluation.
9.0	**Additional Personal Protective Equipment**	Throughout activities	Radiological hazards, Airborne Pb inhalation exposure and skin contamination	Follow the governing RWP for additional instructions as well as the TWD, JSA and other approved documents.	
10	Emergency Response	Throughout activities	Confined Space Class 2C	Follow attached emergency callout	See Attachment A
11	Training	For scope of Cooler tasks	Untrained and unqualified personnel carry more risk of injuries.	Only trained and qualified personnel will perform the work task identified below Confined Space RWT 1,RWT 2 (300, 300A), Bioassay, Back Safety, CBT lead, respiratory protection, Noise & Hearing, Electrical, Forklift training, Fire Extinguisher, Fire watch	HP-OSH-016 (Confined Space) HP-RWT-002 (RDWK 1) HP-RWT-300, 300A RP-WBC1 (Whole Body) HP-IND-010 (Back Safety) TQ-LEAD-1 (CBT Lead) OM-MEDSURV-RES (Medical surveillance) HP-IND-301 (APR/PAPR) HP-IND-317 (Fit test) Pb Monitoring protocol HP-OSH-150A (CBT Electrical) HP-FRF-101 (Fire Extinguisher) HP-FRF-202 (Fire Watch) HP-Q-001 & 001A (Forklift)

Attachment A
Emergency Response

First Aid/Medical Assistance **2222 or 911 or 344-2222 cellular**
Spill Reporting.....2222

	Voice	Pager
Project Manager (Chuck Adey)	344-2374	N/A
Project ES&H Manager (Stephen Musolino)	344-4211	631-443-5831
Project Task Manager (Achyut Tope)	344-5672	N/A
ES&H Coordinator (Denise Hanley)	344-2776	631-344-5939
Local Emergency Coordinator (Denise Hanley)	344-2776	631-344-5939
DOE BGRR Project Manager (Mark Parsons)	344-7978	631-453-5833
DOE Facility Rep. for BGRR (Harold Taylor)	344-2924	631-453-5438

Immediately contact Fire/Rescue should a Confined Space emergency rescue or an injury/illness be required during the course of this project. Fire/Rescue will perform both rescue and provide an initial medical care evaluation.

EMERGENCY NOTIFICATION PROTOCOL

For reporting an emergency, use the below information to convey emergency message:

My name is _____. This is an emergency. *State cause of emergency* _____. We are working at building 701- BGRR. We are working within the Below Ground Duct - Cooler Removal Job classified a Confined Space Class 2C. The Below Ground Duct is located outside Building 701 south side of the Building. My telephone number is_____.

ATTACHMENT 2

EM-BGRR-TP-01-09

Technical Work Document for

BGD Coolers Removal Action

EM Operations Procedures Manual

TECHNICAL WORK DOCUMENT

COOLERS REMOVAL ACTION

Text Pages 1 through 9
Attachments 8.1 through 8.8

Temporary Procedure

Approved: Clinton W Adey
C.W. Adey, Group Manager
Reactor Projects

Date: 1/15/01

Preparer: **A. M. Topé & Roger Taneus**

Expiration Date: **March 30, 2002**

ERD OPM No.: **EM-BGRR-TP-01-09, Rev.1**

1.0 PURPOSE AND SCOPE

1.1 The purpose of this procedure is to provide the detailed work instructions for cutting and removal of the cooling coils (coolers) located in the north and south sections of the below ground ducts adjacent to and on the west side of Building 708, the Instrument House.

1.2 The scope of work prescribed herein includes the cutting and removal of a total of 12 finned-tube cooler units. The north and south ducts each contain 6 cooler units. Each unit contains 192 parallel tubes (96 tubes on the supply side and 96 tubes on the return side) 9.5 feet long fastened into removable-type water headers. The units are installed vertically, with the tubes arranged in rows of 24 each, 4 rows deep, with the rows staggered on a 1-7/16-inch triangular pitch. The tubes have 0.049-inch wall thickness, and contain eight helical fins, 0.012-inch thick, per inch of tube length. The tubes and fins are made of copper, and are bonded with solder. The tubes are rolled into tube sheets, which are 5/8-inch steel plate, copper plated. The tubes and tube sheets are dipped into solder after assembling to seal against voids. The headers are cast iron, machined to fit the tube sheets and provided with gaskets.

There are two 4-inch carbon steel pipes (supply and return), and there is one 1-inch drain line in each cooler unit. Sampling of the cooler fins conducted in May 2000 indicates that leachable quantities of lead are present (TCLP lead – 310 mg/l). The waste from the cooler units is determined to be mixed waste.

The typical dimensions of each cooler unit are approximately 3-feet wide, 2-feet deep, and 9.5-feet high. The dimensions of each duct at the cooler location are approximately: 18.5-feet wide and 10.5 feet high. The inclination of the ducts is approximately 23 degrees. Attachment 8.1 shows the cooler units in plan view; Attachment 8.2 shows cooler units in elevation; Attachment 8.3 shows the location and elevations the cooler units in the below ground air cooling system. Attachments 8.4 and 8.5 provide additional elevation and dimensions of the ducts and the cooler units.

The specific work activities covered under this Technical Work Document include:

- Below Ground Duct Entry House
- Cutting, Bagging and Hauling
- Containerization
- Final Inspection at Completion of Work

1.3 A Below Ground Duct (BGD) Entry House, located at the east face of the BGD sections, constructed for the Below Ground Duct (BGD) Sampling and Analysis Plan (SAP) implementation project, will be used by workers to gain access to the

cooler units via the north and south duct openings. Tools, services, equipment, and procedures for SAP implementation activities will be in place prior to commencement of the cooler removal project. Additional electrical service, lighting, basic and specialty tools, scaffolds, cutting tools, and other material required to perform work will be provided.

1.4 The work activities prescribed herein will be performed by BNL qualified personnel, such as, plumbers, sheet metal workers, carpenters, riggers; and contractor personnel such as, D&D workers, contractor personnel, and others assigned to the BGRR Decommissioning Project (BGRR-DP).

1.5 Activities covered by this Technical Work Document may be conducted in multiple shifts.

2.0 RESPONSIBILITIES

2.1 The Project Manager is responsible for the entire Reactor Decommissioning Project.

2.2 The Project Engineer is responsible for the overall BGRR-DP removal project.

2.3 The BGRR-DP Task Project Manager or designee is responsible for the technical content and overall execution of this Work Document.

2.4 The BGRR-DP Field Engineer (FE) is responsible for safety, direction of all fieldwork activities prescribed in this Work Document including oversight of contractors assigned to the BGRR-DP, and BNL personnel to insure both contractual compliance and compliance with BNL/BGRR permits, work policies, and procedures. The Field Engineer is responsible for coordination with project, safety, and waste management personnel. The Field Engineer is also responsible for ensuring training and requirements are met by workers.

2.5 The Environmental Management Directorate Environment, Safety and Health Manager (ESH) or his designee is responsible for the assessment of environment, safety, and health issues associated with the work activities delineated herein.

2.6 The BGRR-DP Facility Support (FS) Representative is responsible for implementation of the requirements of the BNL RadCon Manual through Institutional and Facility Support RadCon procedures.

2.7 The IH/IS Representative and the FE are responsible to analyze the non-radiological hazards associated with the work through implementation of procedure, EM-OPM-4.6, Hazard Materials Assessment, Analysis, and Mitigation for BGRR Decommissioning Activities.

2.8 The EM Quality Assurance Manager or designee is responsible to insure the EM Quality Assurance Guidelines are incorporated into the planning process, and review of the Task Quality Plan for the work activities prescribed herein per Ref. 7.2.

2.9 The Waste Management Representative (WMR) is responsible for assisting the project management personnel with waste characterization, waste classification, disposal facility identification and liaison with WMD, identification and delivery of appropriate waste containers, waste compaction, packaging, preparation of profiles, contractual arrangements with waste transporters, container inventories, waste shipments, waste disposal, and preparation and maintenance of all required documentation.

3.0 PREREQUISITES

3.1 A Work Permit (WP) for the work covered under this document has been approved.

FE:_____ Date:_____

3.2 A task-specific Job Safety Analysis (JSA) for this work activity has been approved and reviewed by all personnel involved with these work activities.

FE: _____ Date: _____

IH/IS Representative: _____ Date: _____

3.3 The Unreviewed Safety Issue Determination/Safety Evaluation (USID/SE) No. BGRR-SE-01-03 has been approved.

FE: _____Date: _____

3.4 A Radiological Work Permit (RWP) is required for the work activities prescribed in each section. The radiological hazards involved in the removal and disposal activities shall be evaluated and addressed in the RWP. Verification sign-off is provided in each section.

FS Representative: _____ Date: _____

3.5 A Hazardous Materials Assessment has been completed in accordance with Ref. 7.3 for all of the work areas covered in this procedure, and all identified hazardous materials have been removed or stabilized to ensure a safe working environment.

IH/IS Representative: _____ Date: _____

3.6 Approved Waste Management Plan, waste containers, compaction facility readiness, packaging, profile approval, and shipping contractor are available.

FE: _____ Date: _____

WMR: _____ Date: _____

4.0 PRECAUTIONS AND LIMITATIONS

4.1 This document is a TEMPORARY procedure valid only for the specific work activities delineated in Section 5.0, and may only be implemented in conjunction with an approved Work Permit, and other approved appropriate documents and permits (e.g., RWP) as stated on and attached to the implementing Work Permit.

4.2 The internal surfaces of the ducts and the cooler units are contaminated with radionuclides, such as, Co-60, Cs-137, Sr-90, Am-241, U-234, U-235, Pu-238, Pu-239, Pu-240, Pu-241, and lead. Entry will only be made and work will only be performed inside the ducts with full compliance to with the detailed requirements of the specific RWP.

4.3 The work has been determined to be Class 2C Confined Space Entry (CSE) Permit required work. All work shall be conducted in full compliance with this permit.

4.4 Both the JSA and USID/SE are based on NO FLAME CUTTING of components that are known or suspected to be radiologically contaminated. If it is later determined that such flame cutting is required, both of these documents shall be revised. Revision of the USID/SE requires DOE approval.

4.5 Flame cutting of components which have been surveyed and verified not to be radiologically contaminated is allowed, however, no oxyacetylene tanks are allowed inside the enclosure, so that any flame cutting done inside is fed by gas from outside with all appropriate fire watch and controls.

4.6 Tools and equipment used to implement the demolition activities shall be selected based on the effectiveness in accomplishing the task while minimizing the workers exposure to both radiological and non-radiological hazards, and release of such hazardous substances to the environment. Prior to determining the methods and equipment utilized, the FE, IH/IS Representative, and the FS Representative shall evaluate and agree upon these methods.

4.7 No power-operated equipment such as rotary grinders, wire brushes, or power-washers shall be used for decontamination of components. Methods for decontamination shall be limited to use of masslin wipes, abrasive pads, hand-held and wire brushes.

4.8 Storage of unused oxyacelylene tanks or any other combustible materials is NOT permitted near the BGD or the Entry House.

5.0 PROCEDURE

5.1 Entry House and BGD Preparatory Work

Entry House: A BGD Entry House has been built at the opening of the remaining section of the east end of the below grade ducts. The Entry House is approximately 26 feet long, 12 feet wide with a separate container loading area 9.5 feet long and 7.5 feet wide. A layout of the Entry House is shown in Attachment 8-6. The Entry House will serve as: (1) tools/equipment storage area, (2) container loading area, and (3) access to the north and south BGDs. The Entry House will have electrical service. D&D workers, HP Technicians, and other approved personnel will occupy the Entry House to perform work. It is assumed, since sampling activities related to the BGD SAP implementation would have been completed with the use of the Entry House, the equipment/tools, services, access, and procedures are already in place and will be determined appropriate for use in the Cooler Removal Project. Appropriate access to the Entry House will be provided so that a forklift can place a B-12 box in to and remove from the Entry House.

Ducts: All preparatory work inside the ducts will be conducted under a WP, RWP, and a CSE Permit. The bottom of the concrete ducts will be covered with anti-skid material to provide better traction for workers. A handrail will be installed in each duct. A rescue rope (lifeline) and approved anchors will be provided in each duct to retrieve personnel, in case of an emergency. A 1600 cfm HEPA filtration system will installed at the north and south Cooler Sump locations when the cutting operations are in progress in the respective ducts. Attachment 8.8 shows details for an adapter that will be fabricated and installed at the Cooler Sump locations. A smoke test will be conducted to verify airflow pattern. This system will compliment the HEPA filtration system located in the east intake structure. An appropriately sized winch (manual or electric) or a pulley type system will be installed to pull a cart loaded with cooler sections up the incline into the Entry House. Appropriate electrical service to operate the lighting, cutting and other tools, winch (if required), and HEPA filtration system will be provided, both inside the Entry House and the Ducts.

5.1.1 Cooler Removal Action Blue Book is complete.

Task Project Manager:_____ Date:_____

5.1.2 A WP has been issued for the work described in Section 5.1 above:

WP No:_____ FE :_____Date:_____

5.1.3 A Confined Space Entry Permit is issued for the work to be conducted in the ducts.

IH/IS Representative: _____Date:_____

FE:_____ Date:_____

5.1.4 A RWP has been issued for work described in 5.1 above:

RWP No: _____ FE: _____ Date: _____

5.1.5 The JSA has been reviewed to verify that no additional hazards may exist due to changing field conditions or configuration.

FE:_____ Date: _____

IH/IS Representative:_____ Date: _____

5.1.6 Verify that appropriate lighting and electrical service are available and adequate in the work area.

FE:_____ Date: _____

IH/IS Representative:_____ Date: _____

5.1.7 Verify that the anti-skid material is safely installed in both ducts. Verify that handrails installed in each duct are secure and safe.

FE:_____Date: _____

IH/IS Representative:_____ Date: _____

5.1.8 The FE has verified that a smoke test was conducted by an experienced individual (qualified RCT) and the airflow pattern into the duct and at the cooler location is adequate.

Performed by: _____Date: _____

FE:_____Date: _____

5.2 Cutting, Bagging and Hauling

Qualified BNL or contractor personnel will cut the coolers units. It is anticipated that two personnel will be dedicated for cutting operations and two personnel will be dedicated for bagging and hauling operations. One of the HP Technicians assigned will be located near the cooler units to provide local radiological support. The number of people and their tasks may be changed by the Field Engineer depending upon the productivity/efficiency review and worker's input.

Each cooler unit is approximately 3 feet wide, 9.5 feet high, and 2 feet deep. It is expected that Sawzalls™ will be used to cut the cooler units, however, this tool might be replaced by other similar mechanical devices as determined by the Field Engineer, IH/IS Representative and FS Representative.

Cutting Process: The following process will be used to remove the finned copper tubes from each cooler unit. Copper tubes will be removed first from the downstream bundle and then from the upstream bundle, one cooler unit at a time, in each duct. A pre-engineered scaffold will be used to make the top cuts. While on the scaffold, the saw operator will cut 6 to 8 tubes, 4 rows deep, by making two horizontal cuts; one in the top of the unit and another about 5 feet below the first cut. The tubes will be held by a D&D Worker while the second cut is made. The speed of the saw will be adjusted to operate at a moderate blade speed. The saw operator will cut only those tubes held by the D&D Worker. The cut tubes will be manually freed from the lateral supports and handed over to another D&D Worker standing on the floor for packaging. The lateral supports will be cut, as necessary, to remove the tubes. In this manner, cutting the upper section of the down-stream bundle will be completed. The scaffold will be moved and the saw operator will make the bottom cut, again cutting the 6-8 tube, 4 rows deep while a D&D Worker will hold the tubes being cut. The lateral supports will be cut, as necessary, to remove the tubes. In this manner, the cooling tubes from the downstream bundle cooler unit will be removed. The above process will be repeated for removing the tubes first on the downstream, and then on the upstream side of the cooler unit. The same process will be repeated for all cooler units in the north and south ducts.

The Field Engineer, in consultation with IH/IS Representative, and FS Representative may alter the cutting sequence during the course of cutting

operations, provided, such alterations do not significantly change the process described above.

Upon completion of the removal of tubes from the first cooler unit, the cutting operations will be evaluated from safety, lessons learned, ALARA, efficiency and worker/HP feedback perspectives.

Bagging & Hauling Process: The cooler sections will be wrapped in herculite and then bagged in plastic or other suitable bags or sleeves. Filled bags will then be placed on the side of the duct, opposite to the wall with the handrail. After sufficient bags are accumulated in this interim storage area, the bags will be loaded into the cart and will be pulled up the incline into the Entry House with the use of a winch to keep exposure as low as reasonably achievable. During this transporting operation the cutting operation will be stopped and all personnel in the duct will be on the scaffold or walk up to the duct opening. The bags will be placed in the approved B-12 containers by the D&D Workers located in the Entry House. The HP Technician assigned to and located in the Entry House will provide support to maintain radiological control of the area, equipment, and personnel. The above process will be repeated for the remaining cooler units in both ducts.

Tube Sheets and Framework Removal Process: The steel framework supporting the cooler units will be sectioned in manageable sizes and placed in separate containers. The lower tube sheet chests will be inspected for the presence of water. If water is found, the water will be drained. The lower tube sheets will then be removed and may be sectioned into additional pieces and placed in shipping containers. Prior to placing in containers, these components will be wrapped in herculite and placed in plastic or other suitable bags.

5.2.1 Cooler Removal Action Blue Book is complete.

Task Project Manager:_____Date:_____

5.2.2 A Work Permit has been issued for activities described in Section 5.2.

WP No: _____ FE:_____ Date:_____

5.2.3 A RWP has been issued for this section:

RWP No:_____FE:_____ Date:_____

5.2.4 A Confined Space Entry Permit is issued for the work to be conducted in the ducts.

FE:_____ Date: _____

IH/IS Representative: _____ Date: _____

5.2.5 The JSA has been reviewed to verify that no additional hazards may exist due to changing field conditions.

FE:_____ Date: _____

IH/IS Representative: _____ Date: _____

5.2.6 Verify that a scaffold is appropriately installed at the coolers banks to facilitate cutting the cooler units at higher elevations.

FE:_____ Date: _____

IH/IS Representative: _____ Date: _____

5.2.7 Verify that adequate lighting is provided.

FE:_____ Date: _____

5.2.8 Verify that approved B-25 or B12 containers are available.

FE: _____Date: _____

5.2.9 FE conducted evaluation after initial cutting; lessons learned incorporated

FE: _____ Date: _____

5.3 Containerization:

Qualified BNL or contractor personnel will place approved containers at the designated location inside the Entry House using a forklift or other suitable equipment. The approved container is a B-12. D&D workers will place each bag of cooler sections in a container in the Entry House. A Container Inventory Sheet (Attachment 8-7) will be completed for each container. Upon filling, each container will be covered and surveyed for removal from the Entry House. Qualified BNL personnel will remove the filled containers with the use of a forklift or other suitable equipment and place them on trucks for transportation to the Radioactive Waste Management Facility Building 865. The trucks will bring the containers to Building 865 for waste compaction. A completed Radioactive

Waste Control Form will also be completed for each container prior to transfer to Building 865.

5.3.1 Cooler Removal Action Blue Book is complete.

Task Project Manager:_____ Date:_____ _____

5.3.2 A WP has been issued for the work described in Section 5.3 above.

WP No._____ FE:_____ Date:_____

5.3.3 A RWP has been issued for this section:

RWP No:_____ FE:_____Date:_____

5.3.4 The JSA has been reviewed to verify that no additional hazards may exist due to changing field conditions of configuration.

FE:_____ Date: _____

IH/IS Representative: _____ Date: _____

5.3.5 Verify that containers, forklifts, and riggers are available.

FE:_____ Date: _____

IH/IS Representative: _____ Date: _____

5.4 Final Inspection at Completion of Work

Upon completion of removal of the cooler units, the FE and the FS Representative will validate that all actions are complete per this Work Document and ensure that the access to the ducts is sealed and the Entry House is clean based on radiological surveys. All equipment, tools, and material no longer needed for subsequent operations are released from the cooler.

6.0 RECORDS

File the Work Package and all supporting data and documentation in accordance with Reference 7.2.

7.0 REFERENCES

7.1 ERD-OPM-1.0, Procedure Development Requirements.

7.2 ERD-OPM-4.5, Implementation, Control, and Configuration Management For BGRR Decommissioning Project Work Activities

7.3 ERD-OPM-4.6, Hazardous Materials Assessment, Analysis, and Mitigation for BGRR Decommissioning Activities

7.4 BNL Radiological Control Manual

7.5 USID/SE No. BGRR-SE-01-03

7.6 Job Safety Analysis

Drawings

M-708-38B, 39A, 40, 41A, 42A

8.0 ATTACHMENTS

8.1 Plan View of Cooler Units in North and South Below Ground Exhaust Air Ducts
8.2 Pictorial View of Cooler Units (Middle Section)
8.3 Location and Elevation of Cooler Units in Below Ground Air Cooling System
8.4 Cross-Sectional View of Below Ground Duct and Coolers
8.5 Cross-Sectional View Showing Duct, Coolers, and Associated Piping
8.6 Entry House Layout
8.7 Container Inventory Sheet
8.8 Detail for Adapter to connect HEPA Filter to Cooler Sump

9.0 DEFINITIONS/ACRONYMS

BGRR-DP Brookhaven Graphite Research Reactor Decommissioning Project
EMD Environmental Management Directorate
ESH Environment, Safety, Health and Quality
BGD Below Ground Ducts
FE Field Engineer
FS Facility Support
CPC Container Product Corporation
JSA Job Safety Analysis
WP Work Permit
RWP Radiological Work Permit
USID/SE Unreviewed Safety Issue Determination/Safety Evaluation

Attachment 8.1. Plan View of Cooler Units in North and South Below Ground Exhaust Air Ducts

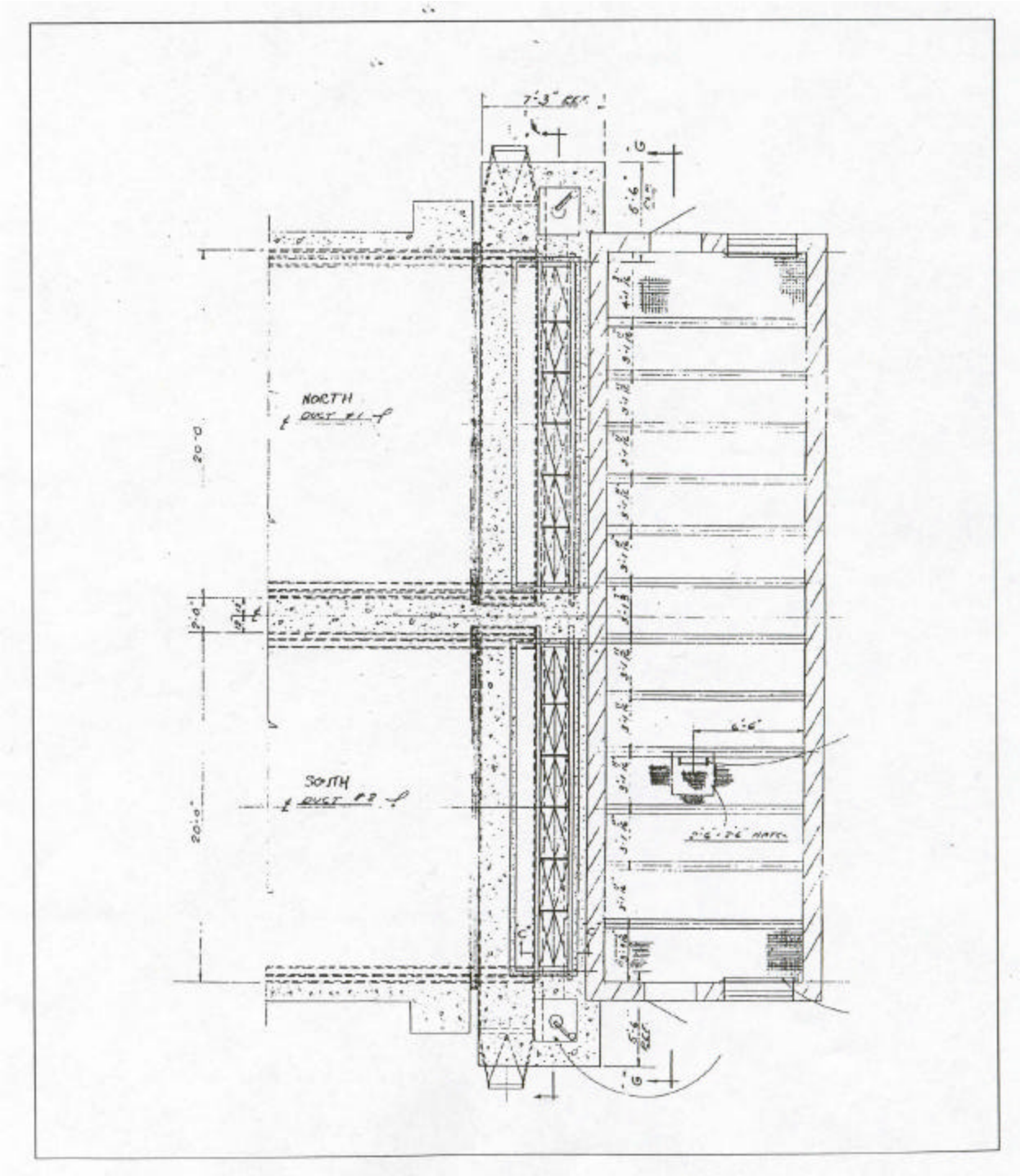

Attachment 8.2. Pictorial View of Cooler Units (Middle Section)

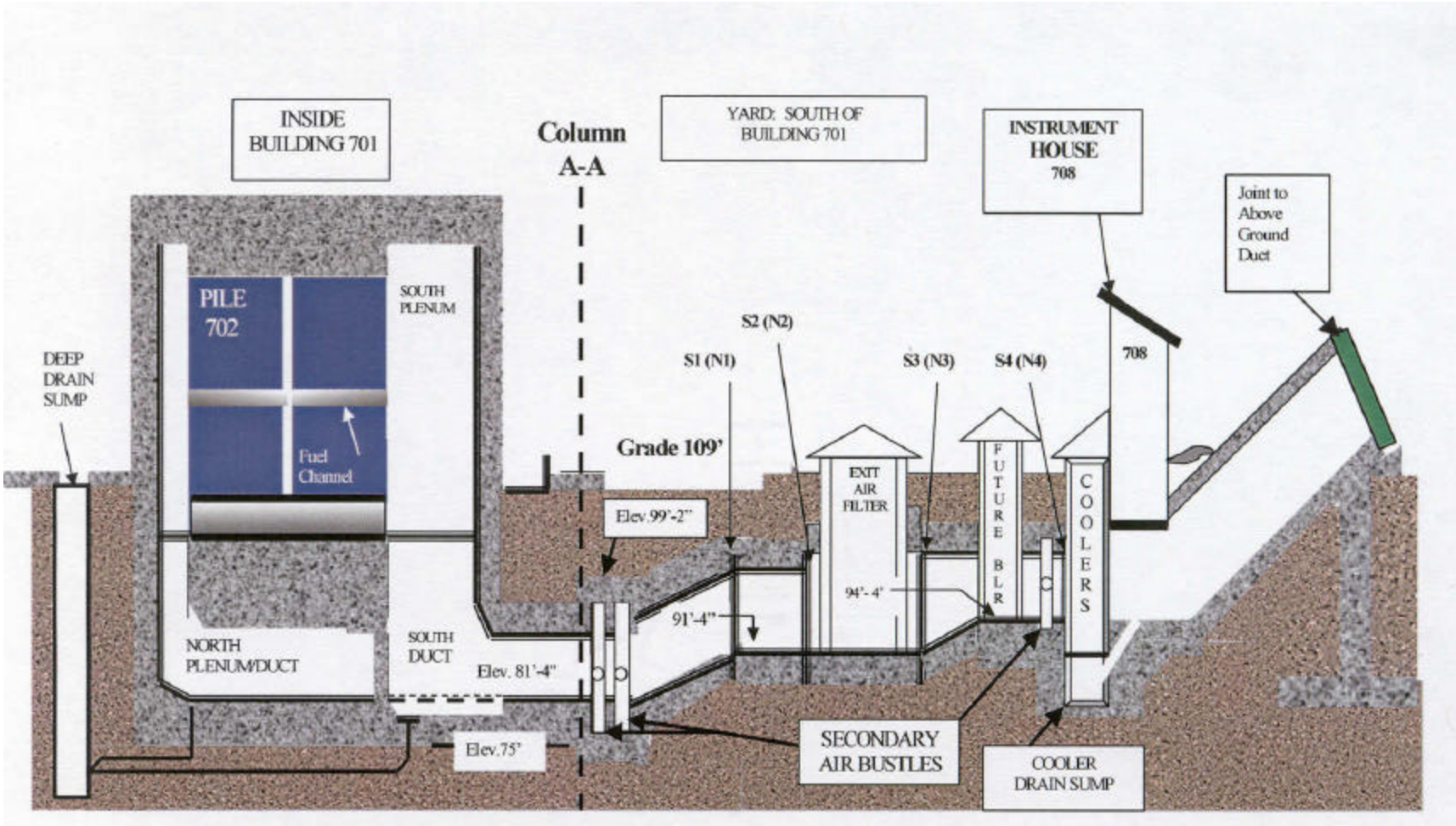

Attachment 8.3. Location and Elevation of Cooler Units in Below Ground Air Cooling System

Attachment 8.4. Cross-Sectional View of Below Ground Duct and Coolers

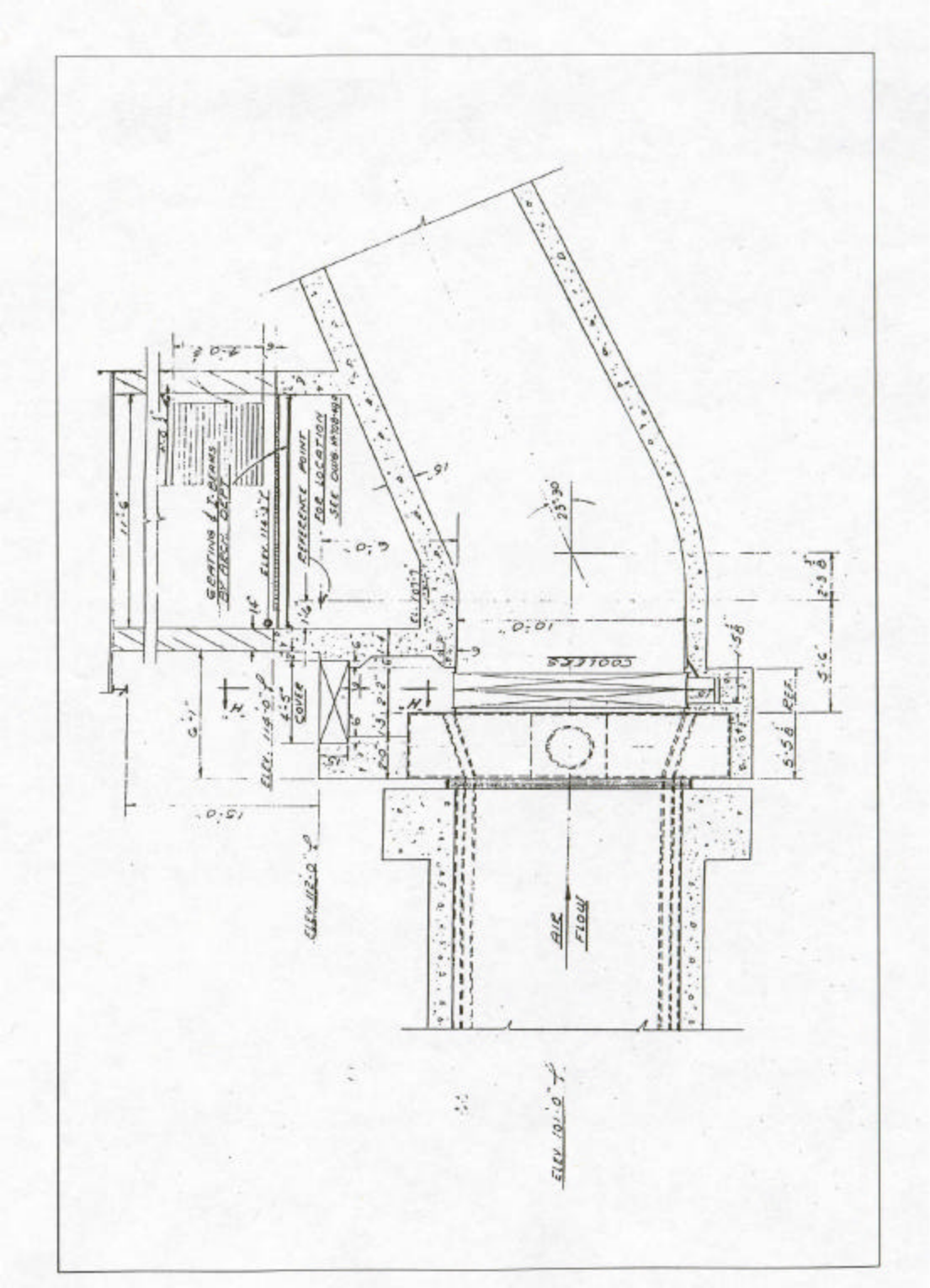

Attachment 8.5. Cross-Sectional View Showing Duct, Coolers, and Associated Piping

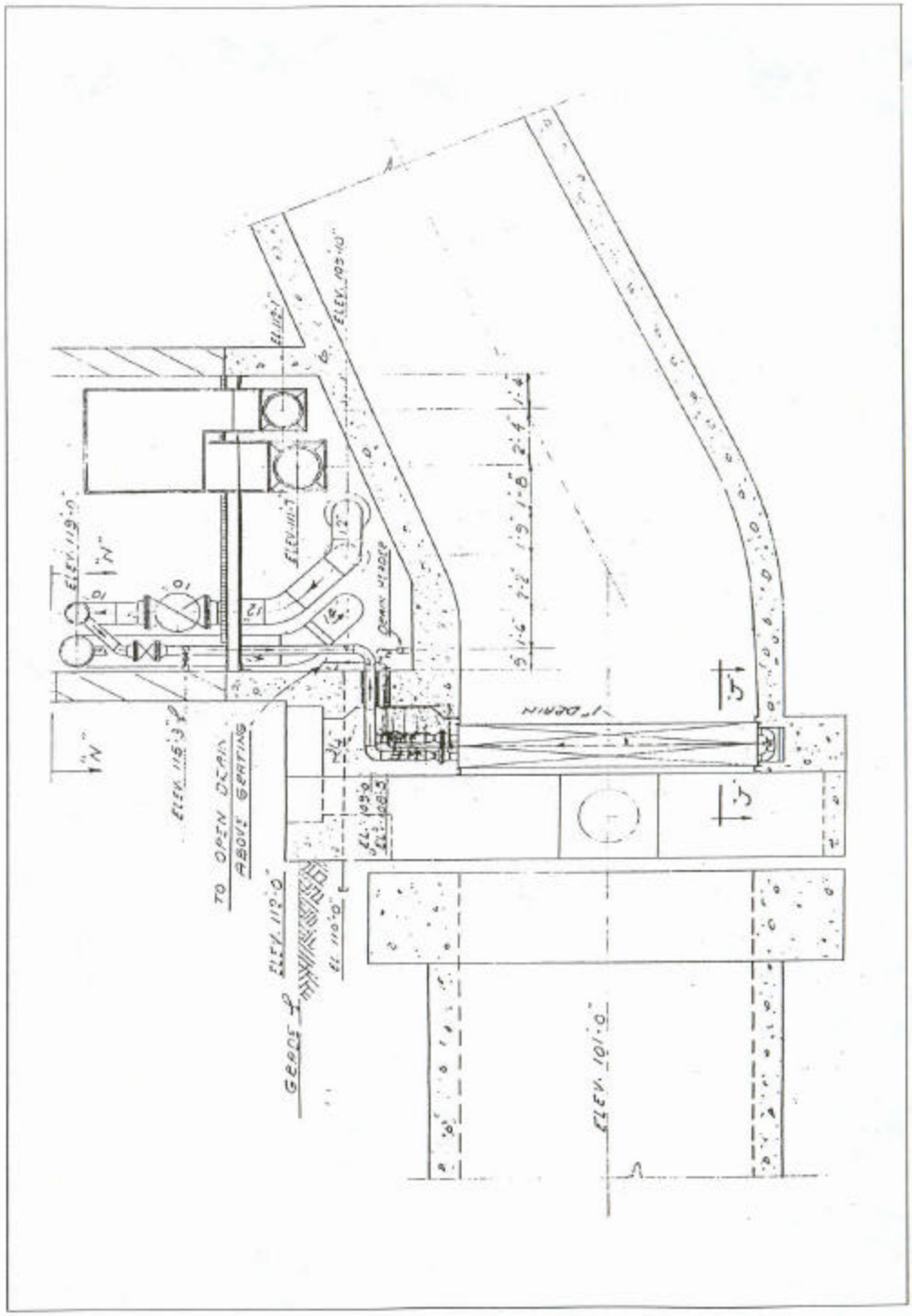

Attachment 8.6. Entry House Layout

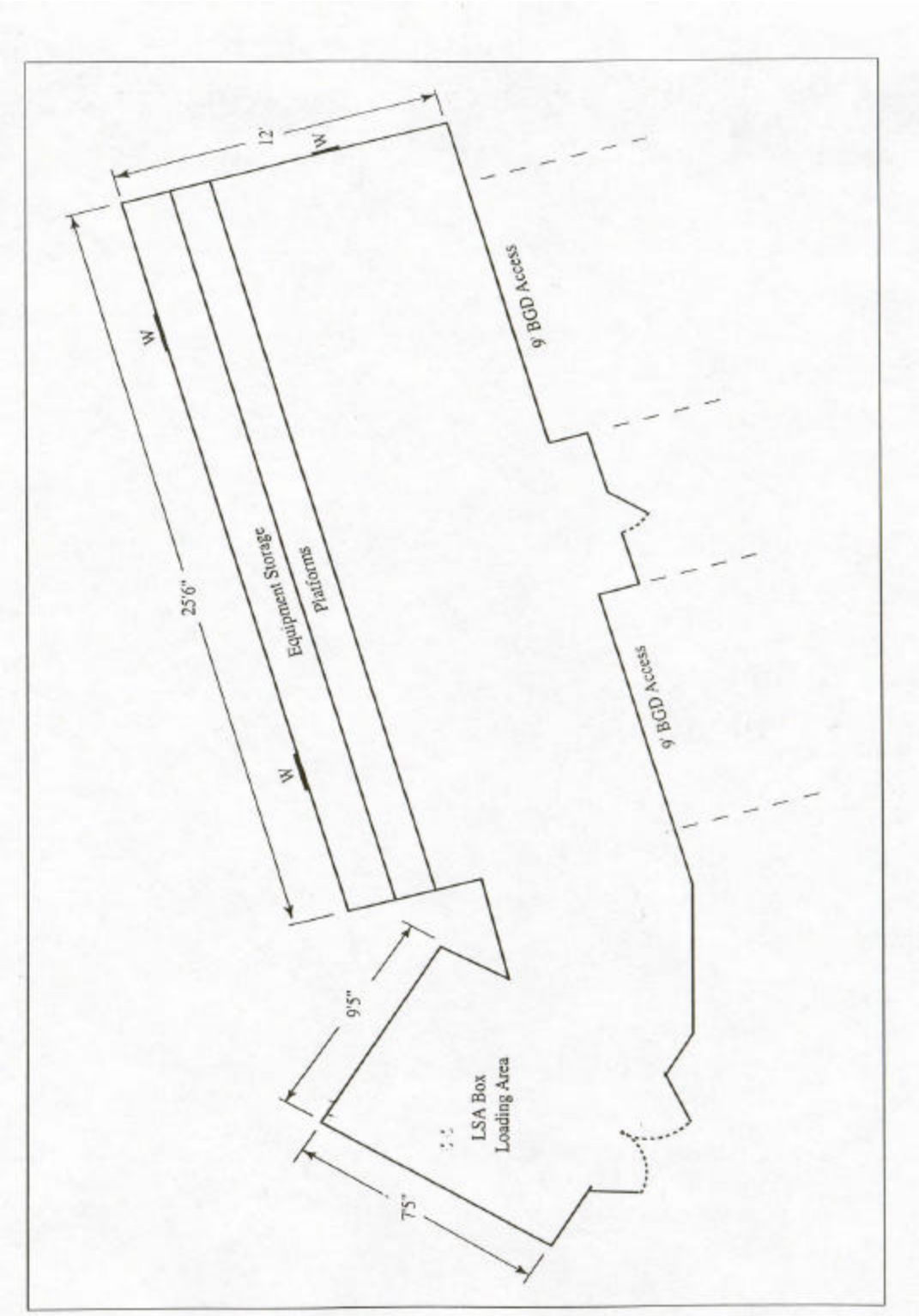

Attachment 8.7. Container Inventory Sheet

BROOKHAVEN NATIONAL LABORATORY
ENVIRONMENTAL MANAGEMENT

Container Inventory Sheet

Container Control Number:			
Container Type:			
Location:			
Date	Contents Description	Size/ Weight	Print Name, and Initial
Analytical Results: (Date and Initial Each Entry)			
Waste Management Representative:		Date:	
Program Manager:		Date:	
Disposition: (Date and Initial Each Entry)			
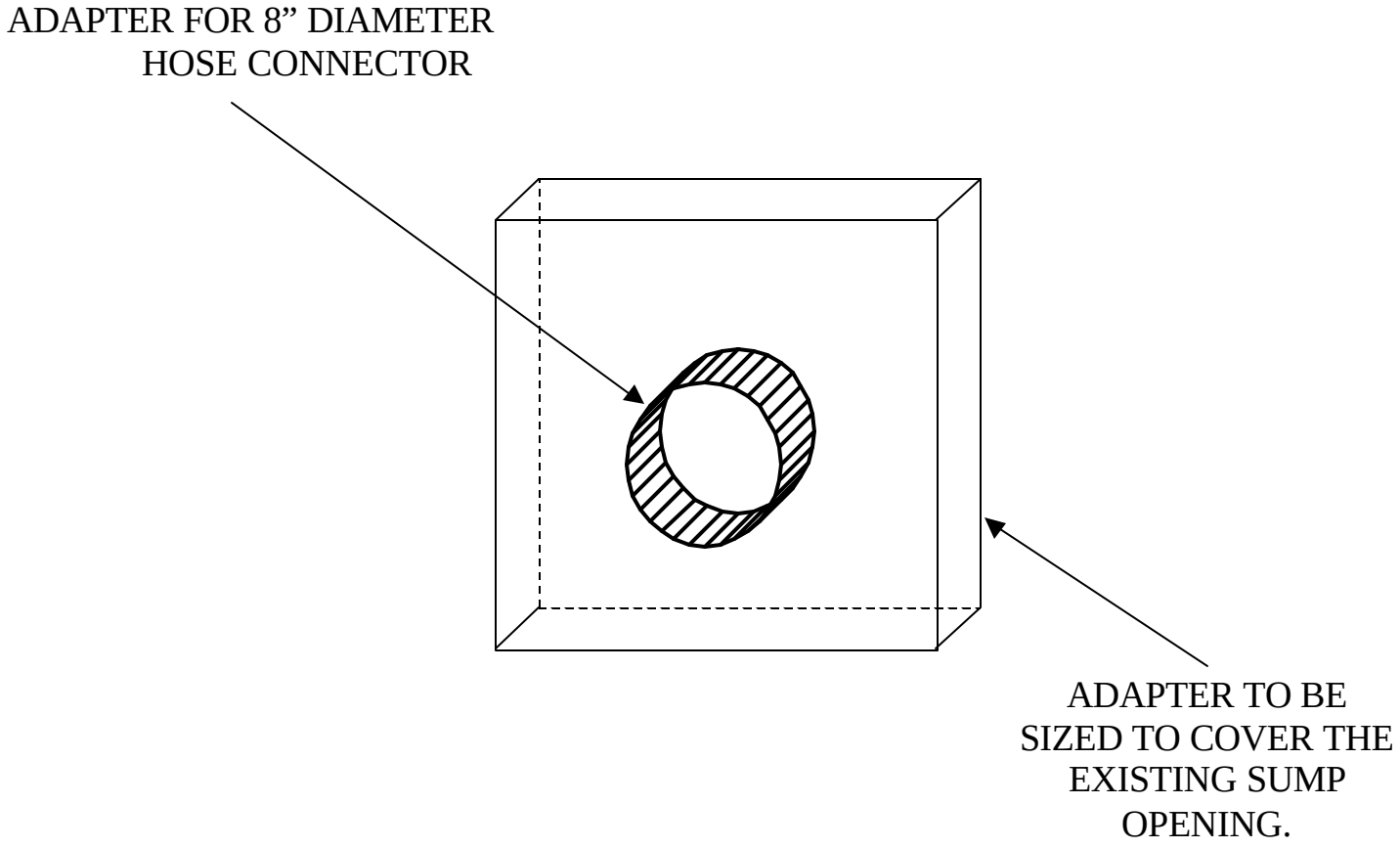
Attachment 8.8. Detail for Adapter to Connect HEPA Filter to Cooler Sumps