ATTACHMENT 9

WORK COMPLETION RADIOLOGICAL SURVEYS

BNL RADIOLOGICAL SURVEY FORM

REASON FOR SURVEY: ROUTINE ☐ SPECIAL ☒

BLDG #: 704 LOCATION: Emergency Fan Room DATE/TIME: 7-13-99 / 1430 RWP #: 99-0101-3

INSTRUMENTS, MODEL / SERIAL #: Ludlum M-19 #60002 c.d. 3-26-00 / Ludlum 3 #50545 c.d. 2-8-00 RO-20 #2784 c.d. 1-6-00

DOSE RATES (HIGHEST) mR/hr		AIRBORNE CONTAMINATION		
		TIME	uCi/cc	%DAC
CONTACT	9			
GENERAL AREA	3	N/A	N/A	N/A

LEGEND: O SMEAR SURVEY LOCATION; O MASSLINN SURVEY LOCATION

XXX Y / ZZZ — XXX - CONTACT READING; ZZZ - READING @ 30 Cm; Y - RADIATION TYPE

99-134

SMEAR SURVEY RESULTS (DPM/100 cm²) ³H B-γ α

1.			8.			15.			22.		
2.			9.			16.			23.		
3.			10.			17.			24.		
4.	N		11.	N		18.	N		25.	N	A
5.		A	12.		A	19.		A	26.		
6.			13.			20.			27.		
7.			14.			21.			28.		

MASSLINN SURVEY RESULTS (DPM/LAS)

1.			8.		
2.			9.		
3.			10.		
4.	N	A	11.	N	A
5.			12.		
6.			13.		
7.			14.		

Inventory of Items in Emergency Fan Room

- 5 pcs. 4' x 4' x 3" leaded glass
- 3 pcs. 4' x 4' x 3" wood
- +/- 15 pcs 10' x 1" stainless steel pipe
- angle irons
- I-beams
- numerous segments of 8-10" diameter steel pipe
- 3pcs. 3' x 3'x 2" plate steel
- 1 – 10' section of 10" aluminum pipe
- 8-10 pcs. of 4" conduit

SURVEYED BY: [signature] 7-13-99 [signature] Signature/date REVIEWED BY: [signature] 8/27/99 Signature/date

LB5100-W Low Background Counting System – Smear Analysis

Date: 7/14/99 # 99-134

Counting Unit id: 1

Data file name: C:\LBXL\UNIT1\SME00197.XLD

Batch Ended: 7/14/99 10:13

Crosstalk Correction: Not Applied

LB5100 # 42212
CD/ 10/16/99

Batch ID: 704 FAN HOUSE ERMERGENCY FAN ROOM

Alpha activity action level (DPM): 20.00

Beta activity action level (DPM): 200.00

Certainty level for MDA and flags: 95.00%

High Voltage Setting: 1327.5

Application Revision: 2.1.4

Application Version: Standard

Alpha efficiency log file: PU239AB
Alpha Efficiency: 18.94%
Alpha to Beta Crosstalk: 6.46%
Alpha Background (CPM): 0.039
Alpha Correction Factor: 1.000

Beta efficiency log file: TC99AB
Beta Efficiency: 26.99%
Beta into Alpha Crosstalk: 0.20%
Beta Background (CPM): 1.43
Beta Correction Factor: 1.000

		Alpha Activity				Beta Activity				Count	Alpha	Beta	Completion	Gamma
	Carrier	DPM	1σ	flags	MDA	DPM	1σ	flags	MDA	time (min)	CPM	CPM	Date - Time	DPM
	1	-0.206	5.28	<MDA	17.72	498.54	44.08	>AL	24.61	1.00	-0.039	134.57	7/14/99 9:51	-130.00
	2	-0.206	5.28	<MDA	17.72	28.04	11.13	<AL	24.61	1.00	-0.039	7.57	7/14/99 9:52	-130.00
	3	5.074	5.28	<AL	17.72	9.52	7.41	<AL	24.61	1.00	0.961	2.57	7/14/99 9:53	-130.00
	4	-0.206	5.28	<MDA	17.72	13.23	8.29	<AL	24.61	1.00	-0.039	3.57	7/14/99 9:54	-130.00
	5	10.354	7.47	At AL	17.72	757.87	54.81	>AL	24.61	1.00	1.961	204.57	7/14/99 9:55	-130.00
	6	-0.206	5.28	<MDA	17.72	76.21	17.43	<AL	24.61	1.00	-0.039	20.57	7/14/99 9:56	-130.00
	7	-0.206	5.28	<MDA	17.72	28.04	11.13	<AL	24.61	1.00	-0.039	7.57	7/14/99 9:58	-130.00
	8	-0.206	5.28	<MDA	17.72	13.23	8.29	<AL	24.61	1.00	-0.039	3.57	7/14/99 9:59	-130.00
	9	-0.206	5.28	<MDA	17.72	13.23	8.29	<AL	24.61	1.00	-0.039	3.57	7/14/99 10:00	-130.00
	10	-0.206	5.28	<MDA	17.72	116.96	21.38	<AL	24.61	1.00	-0.039	31.57	7/14/99 10:01	-130.00
	11	-0.206	5.28	<MDA	17.72	46.57	13.89	<AL	24.61	1.00	-0.039	12.57	7/14/99 10:02	-130.00
	12	-0.206	5.28	<MDA	17.72	83.62	18.21	<AL	24.61	1.00	-0.039	22.57	7/14/99 10:03	-130.00
	13	-0.206	5.28	<MDA	17.72	46.57	13.89	<AL	24.61	1.00	-0.039	12.57	7/14/99 10:04	-130.00
Blank	~~14~~	~~-0.206~~	~~5.28~~	~~<MDA~~	~~17.72~~	~~2.11~~	~~5.24~~	~~<MDA~~	~~24.61~~	~~1.00~~	~~-0.039~~	~~0.57~~	~~7/14/99 10:06~~	~~-130.00~~
	15	-0.206	5.28	<MDA	17.72	42.86	13.38	<AL	24.61	1.00	-0.039	11.57	7/14/99 10:07	-130.00
	16	-0.206	5.28	<MDA	17.72	13.23	8.29	<AL	24.61	1.00	-0.039	3.57	7/14/99 10:08	-130.00
Blank	~~17~~	~~-0.206~~	~~5.28~~	~~<MDA~~	~~17.72~~	~~-5.30~~	~~3.71~~	~~<MDA~~	~~24.61~~	~~1.00~~	~~-0.039~~	~~-1.43~~	~~7/14/99 10:09~~	~~-130.00~~
	18	-0.206	5.28	<MDA	17.72	828.26	57.44	>AL	24.61	1.00	-0.039	223.57	7/14/99 10:10	-130.00
	19	-0.206	5.28	<MDA	17.72	161.41	25.02	At AL	24.61	1.00	-0.039	43.57	7/14/99 10:11	-130.00
	20	-0.206	5.28	<MDA	17.72	817.15	57.03	>AL	24.61	1.00	-0.039	220.57	7/14/99 10:13	-130.00

Reviewed 7/14/99 KC

BNL RADIOLOGICAL SURVEY FORM

REASON FOR SURVEY: O ROUTINE ☒ SPECIAL

BLDG #: 704 LOCATION: Gas Engine Room DATE/TIME: 7-13-99/ 1330 RWP #: 99-0101-

INSTRUMENTS, MODEL / SERIAL #: Ludlum M-19 # 60002 cd 3-26-00 / Ludlum 3 # 50545 cd 2-8-00
LB 5100 # 42212 cd 10/16/99

DOSE RATES (HIGHEST) μR/hr		AIRBORNE CONTAMINATION		
CONTACT	240	TIME	dCi/cc	%DAC
GENERAL AREA	100	N/A	N/A	N/A

LEGEND: O SMEAR SURVEY LOCATION O MASSLINN SURVEY LOCATION

XXX Y / ZZZ — XXX = CONTACT READING; ZZZ = READING @ 30 Cm; Y = RADIATION TYPE

99-133

SMEAR SURVEY RESULTS (DPM/100 cm²) ³H (B-γ) (α) See Attached Results.

1.		8.		15.		22.	
2.	N	9.		16.		23.	
3.		10.		17.		24.	
4.		11.		18.		25.	
5.	A	12.		19.		26.	
6.		13.		20.		27.	
7.		14.		21.		28.	

MASSLINN SURVEY RESULTS (DPM/LAS)

1.	N/A	8.	N/A
2.		9.	
3.		10.	
4.		11.	
5.		12.	
6.		13.	
7.		14.	

BROOKHAVEN GRAPHITE RESEARCH REACTOR CHARACTERIZATION SURVEY MAP

1. Floor
2. Floor
3. Floor
4. Plate
5. Wall
6. Wall
7. "
8. "
9. Cable Insulation
10. Floor
11. I/S Duct
12. I-Beam
13. I/S Yoke
14. Air Operator
15. 2" Pipe in Ovhd
16. Radiator
17. Floor
18. Fire Alarm
19. Wall
20. I/S Door
21. Cable Spool
22. Cable Spool
23. Alum. I-Beam
24. lumber
25. Copper Reel
26. Empty Spool
27. Oil Drum
28. Basket
29. Drum Pumps
30. Alum Beam Segments

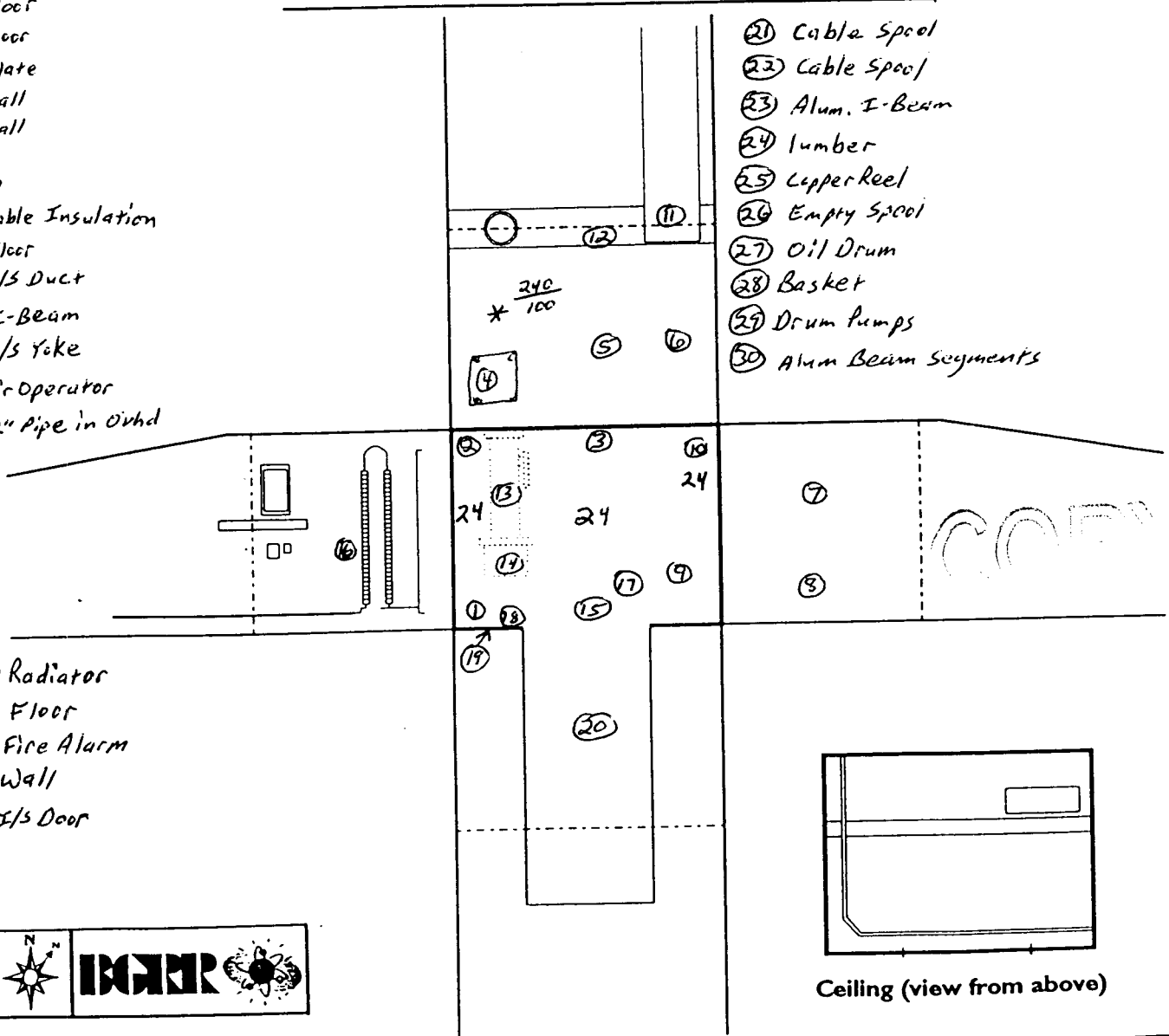

SURVEYED BY: Wm A Moldenhauer 7-13-99 Signature/date

REVIEWED BY: [signature] 7/19/99 Signature/date

Page 2 of 2

COPY

LB5100-W Low Background Counting System – Smear Analysis

Date: 7/14/99 #99-133

Counting Unit id: 1

Data file name: C:\LBXL\UNIT1\SME00198.XLD

Batch Ended: 7/14/99 11:05

Crosstalk Correction: Not Applied

LB 5100 - # 42212
CD 10/16/99

Alpha activity action level (DPM): 20.00

Beta activity action level (DPM): 200.00

Certainty level for MDA and flags: 95.00%

High Voltage Setting: 1327.5

Application Revision: 2.1.4

Application Version: Standard

Alpha efficiency log file: PU239AB
Alpha Efficiency: 18.94%
Alpha to Beta Crosstalk: 6.46%
Alpha Background (CPM): 0.039
Alpha Correction Factor: 1.000

Beta efficiency log file: TC99AB
Beta Efficiency: 26.99%
Beta into Alpha Crosstalk: 0.20%
Beta Background (CPM): 1.43
Beta Correction Factor: 1.000

Batch ID: 704 Fan House Gas Engine Rm

	Alpha Activity				Beta Activity				Count	Alpha	Beta	Completion	Gamma
Carrier	DPM	1σ	flags	MDA	DPM	1σ	flags	MDA	time (min)	CPM	CPM	Date - Time	DPM
1 1	5.074	5.28	<AL	17.72	13.23	8.29	<AL	24.61	1.00	0.961	3.57	7/14/99 10:31	-130.00
2 2	-0.206	5.28	<MDA	17.72	-1.59	3.71	<MDA	24.61	1.00	-0.039	-0.43	7/14/99 10:32	-130.00
3 3	-0.206	5.28	<MDA	17.72	-5.30	3.71	<MDA	24.61	1.00	-0.039	-1.43	7/14/99 10:33	-130.00
4 4	5.074	5.28	<AL	17.72	-5.30	3.71	<MDA	24.61	1.00	0.961	-1.43	7/14/99 10:34	-130.00
5 5	-0.206	5.28	<MDA	17.72	-1.59	3.71	<MDA	24.61	1.00	-0.039	-0.43	7/14/99 10:36	-130.00
6 11	-0.206	5.28	<MDA	17.72	-5.30	3.71	<MDA	24.61	1.00	-0.039	-1.43	7/14/99 10:37	-130.00
7 12	-0.206	5.28	<MDA	17.72	5.82	6.42	<MDA	24.61	1.00	-0.039	1.57	7/14/99 10:38	-130.00
8 13	-0.206	5.28	<MDA	17.72	5.82	6.42	<MDA	24.61	1.00	-0.039	1.57	7/14/99 10:39	-130.00
9 15	-0.206	5.28	<MDA	17.72	-5.30	3.71	<MDA	24.61	1.00	-0.039	-1.43	7/14/99 10:40	-130.00
10 14	5.074	5.28	<AL	17.72	5.82	6.42	<MDA	24.61	1.00	0.961	1.57	7/14/99 10:41	-130.00
11 18	-0.206	5.28	<MDA	17.72	5.82	6.42	<MDA	24.61	1.00	-0.039	1.57	7/14/99 10:43	-130.00
12 19	-0.206	5.28	<MDA	17.72	-1.59	3.71	<MDA	24.61	1.00	-0.039	-0.43	7/14/99 10:44	-130.00
13 20	-0.206	5.28	<MDA	17.72	2.11	5.24	<MDA	24.61	1.00	-0.039	0.57	7/14/99 10:45	-130.00
14 16	-0.206	5.28	<MDA	17.72	-1.59	3.71	<MDA	24.61	1.00	-0.039	-0.43	7/14/99 10:46	-130.00
15 17	-0.206	5.28	<MDA	17.72	-5.30	3.71	<MDA	24.61	1.00	-0.039	-1.43	7/14/99 10:47	-130.00
16 21	-0.206	5.28	<MDA	17.72	2.11	5.24	<MDA	24.61	1.00	-0.039	0.57	7/14/99 10:48	-130.00
17 22	-0.206	5.28	<MDA	17.72	2.11	5.24	<MDA	24.61	1.00	-0.039	0.57	7/14/99 10:50	-130.00
18 23	-0.206	5.28	<MDA	17.72	-1.59	3.71	<MDA	24.61	1.00	-0.039	-0.43	7/14/99 10:51	-130.00
19 41	-0.206	5.28	<MDA	17.72	-1.59	3.71	<MDA	24.61	1.00	-0.039	-0.43	7/14/99 10:52	-130.00
20 42	-0.206	5.28	<MDA	17.72	2.11	5.24	<MDA	24.61	1.00	-0.039	0.57	7/14/99 10:53	-130.00
21 6	-0.206	5.28	<MDA	17.72	-1.59	3.71	<MDA	24.61	1.00	-0.039	-0.43	7/14/99 10:54	-130.00
22 7	-0.206	5.28	<MDA	17.72	2.11	5.24	<MDA	24.61	1.00	-0.039	0.57	7/14/99 10:55	-130.00
23 8	-0.206	5.28	<MDA	17.72	-1.59	3.71	<MDA	24.61	1.00	-0.039	-0.43	7/14/99 10:56	-130.00
24 9	-0.206	5.28	<MDA	17.72	-1.59	3.71	<MDA	24.61	1.00	-0.039	-0.43	7/14/99 10:58	-130.00
25 10	-0.206	5.28	<MDA	17.72	2.11	5.24	<MDA	24.61	1.00	-0.039	0.57	7/14/99 10:59	-130.00
26 25	-0.206	5.28	<MDA	17.72	-5.30	3.71	<MDA	24.61	1.00	-0.039	-1.43	7/14/99 11:00	-130.00

KK

Reviewed 7/14/99 KK

7/14/99

P 3-8-3

LB5100-W Low Background Counting System – Smear Analysis

COPY

Date: 7/14/99 #99-133

Counting Unit id: 1

Data file name: C:\LBXL\UNIT1\SME00198.XLD

Batch Ended: 7/14/99 11:05

Crosstalk Correction: Not Applied

LB 5100 # 42212
CD- 10/16/99

Batch ID: 704 Fan House Gas Engine Rm

Alpha activity action level (DPM): 20.00

Beta activity action level (DPM): 200.00

Certainty level for MDA and flags: 95.00%

High Voltage Setting: 1327.5

Application Revision: 2.1.4

Application Version: Standard

Alpha efficiency log file: PU239AB
Alpha Efficiency: 18.94%
Alpha to Beta Crosstalk: 6.46%
Alpha Background (CPM): 0.039
Alpha Correction Factor: 1.000

Beta efficiency log file: TC99AB
Beta Efficiency: 26.99%
Beta into Alpha Crosstalk: 0.20%
Beta Background (CPM): 1.43
Beta Correction Factor: 1.000

	Alpha Activity				Beta Activity				Count	Alpha	Beta	Completion	Gamma
Carrier	DPM	1σ	flags	MDA	DPM	1σ	flags	MDA	time (min)	CPM	CPM	Date - Time	DPM
2727	-0.206	5.28	<MDA	17.72	-5.30	3.71	<MDA	24.61	1.00	-0.039	-1.43	7/14/99 11:01	-130.00
2824	5.074	5.28	<AL	17.72	-1.59	3.71	<MDA	24.61	1.00	0.961	-0.43	7/14/99 11:02	-130.00
2926	-0.206	5.28	<MDA	17.72	35.45	12.31	<AL	24.61	1.00	-0.039	9.57	7/14/99 11:03	-130.00
3048 KK	-0.206	5.28	<MDA	17.72	2.11	5.24	<MDA	24.61	1.00	-0.039	0.57	7/14/99 11:05	-130.00

Reviewed 7/14/99 KK

RNJ 9/1/99

BNL RADIOLOGICAL SURVEY FORM

P1 of 2

REASON FOR SURVEY: ☐ ROUTINE ☒ SPECIAL

BG #: 704 LOCATION: Instrumentation Room DATE/TIME: 7-13-99/1400 RWP #: 99-0101-3

INSTRUMENTS, MODEL / SERIAL #: Ludlum M-19 #60002 cd 3-26-00 / Ludlum 3 #50545 cd 2-8-00 RO-20 #2784 cd 1-6-00 LB 5100 # 42212 CD 10/16/99

DOSE RATES (HIGHEST) In μR/hr		AIRBORNE CONTAMINATION		
CONTACT	1000 μR/hr	TIME	dpm/cc	%DAC
GENERAL AREA	400 μR/hr	N/A	N/A	N/A

LEGEND: O SMEAR SURVEY LOCATION ☐ MASSLINN SURVEY LOCATION

XXX Y / ZZZ — XXX - CONTACT READING; ZZZ - READING @ 30 Cm; Y - RADIATION TYPE

99-132

SMEAR SURVEY RESULTS (DPM/100 cm²) ^{3}H (B-γ) (α) See Attached results.

N/A

MASSLINN SURVEY RESULTS (DPM/LAS)

N/A

BROOKHAVEN GRAPHITE RESEARCH REACTOR CHARACTERIZATION SURVEY MAP

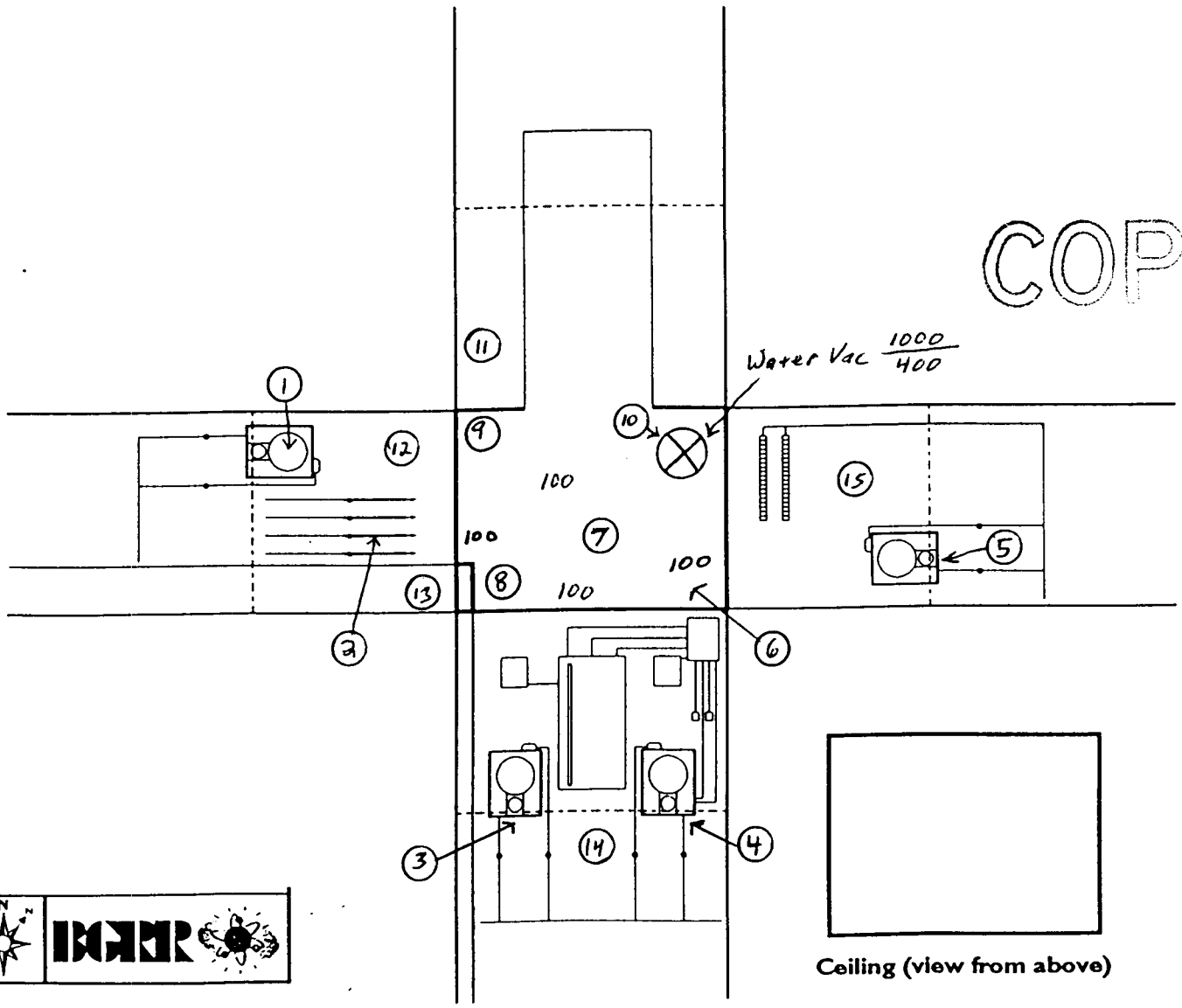

SURVEYED BY: Wm Waldrum 7-13-99 Signature/date

REVIEWED BY: [signature] 7/13/99 Signature/date

Form ES-1000.1 ES-SOP-1000 rev 1, attch 8.2, page 11 File Code: HP31

P 2 of 2

COPY

LB5100-W Low Background Counting System – Smear Analysis

#99-132

Date: 7/14/99
Counting Unit id: 1
Data file name: C:\LBXL\UNIT1\SME00196.XLD
Batch Ended: 7/14/99 9:44
Crosstalk Correction: Not Applied

LB 5100 # 42212
CD - 10/16/99

Alpha activity action level (DPM): 20.00
Beta activity action level (DPM): 200.00
Certainty level for MDA and flags: 95.00%
High Voltage Setting: 1327.5

Application Revision: 2.1.4
Application Version: Standard

Alpha efficiency log file: PU239AB
Alpha Efficiency: 18.94%
Alpha to Beta Crosstalk: 6.46%
Alpha Background (CPM): 0.039
Alpha Correction Factor: 1.000

Beta efficiency log file: TC99AB
Beta Efficiency: 26.99%
Beta into Alpha Crosstalk: 0.20%
Beta Background (CPM): 1.43
Beta Correction Factor: 1.000

Batch ID: 704 FAN HOUSE RM-INSTRUMENTATION

	Alpha Activity				Beta Activity								
Carrier	DPM	1σ	flags	MDA	DPM	1σ	flags	MDA	Count time (min)	Alpha CPM	Beta CPM	Completion Date - Time	Gamma DPM
1	5.074	5.28	<AL	17.72	13.23	8.29	<AL	24.61	1.00	0.961	3.57	7/14/99 9:28	-130.00
2	5.074	5.28	<AL	17.72	5.82	6.42	<MDA	24.61	1.00	0.961	1.57	7/14/99 9:29	-130.00
3	-0.206	5.28	<MDA	17.72	2.11	5.24	<MDA	24.61	1.00	-0.039	0.57	7/14/99 9:30	-130.00
4	5.074	5.28	<AL	17.72	2.11	5.24	<MDA	24.61	1.00	0.961	0.57	7/14/99 9:31	-130.00
5	-0.206	5.28	<MDA	17.72	2.11	5.24	<MDA	24.61	1.00	-0.039	0.57	7/14/99 9:33	-130.00
6	-0.206	5.28	<MDA	17.72	5.82	6.42	<MDA	24.61	1.00	-0.039	1.57	7/14/99 9:34	-130.00
7	-0.206	5.28	<MDA	17.72	9.52	7.41	<AL	24.61	1.00	-0.039	2.57	7/14/99 9:35	-130.00
8	-0.206	5.28	<MDA	17.72	39.16	12.85	<AL	24.61	1.00	-0.039	10.57	7/14/99 9:36	-130.00
9	-0.206	5.28	<MDA	17.72	5.82	6.42	<MDA	24.61	1.00	-0.039	1.57	7/14/99 9:37	-130.00
10	5.074	5.28	<AL	17.72	13.23	8.29	<AL	24.61	1.00	0.961	3.57	7/14/99 9:38	-130.00
11	5.074	5.28	<AL	17.72	2.11	5.24	<MDA	24.61	1.00	0.961	0.57	7/14/99 9:40	-130.00
12	-0.206	5.28	<MDA	17.72	5.82	6.42	<MDA	24.61	1.00	-0.039	1.57	7/14/99 9:41	-130.00
13	-0.206	5.28	<MDA	17.72	-1.59	3.71	<MDA	24.61	1.00	-0.039	-0.43	7/14/99 9:42	-130.00
14	-0.206	5.28	<MDA	17.72	5.82	6.42	<MDA	24.61	1.00	-0.039	1.57	7/14/99 9:43	-130.00
15	-0.206	5.28	<MDA	17.72	2.11	5.24	<MDA	24.61	1.00	-0.039	0.57	7/14/99 9:44	-130.00

Reviewed 7/14/99 KK

7/15/99

C. O. C. Number
99071406

Contractor Number

Page 1 of 1

BROOKHAVEN NATIONAL LABORATORY
SAFETY & ENVIRONMENTAL PROTECTION DIVISION

ANALYTICAL SERVICES LABORATORY
BLDG 535A
UPTON, N.Y. 11973-5000

Chain of Custody Information

BNL P.O. No:

Ship to:
Pick Up by:
Attention:

Bioassay samples will not be accepted if bottles are filled above the shoulder

Project Name: BGRR #99-101			
Requested by: R. Miltenberger	E-Mail Reports to:	SAMPLER: Ken Kropp	Priority Authorization:
Life Number: [illegible]	EP Manager: K. Cottell	SAMPLER:	Group Leader or Higher CALL
Account No: [illegible] Dept. Code: [illegible]	ESS Manager: R. Miltenberger	SAMPLER:	x2502 (Rad), x4860 (Non-Rad)

FILL OUT ONLY SHADED AREAS. CANNOT ACCEPT SAMPLES WITH ACTIVITY >1mR/hr

ASL Number	Sample Information								Container		Analysis Requested**									
	Grid	-ID	Date	-C	Time	Bldg. #	Matrix	Description	#	vol	αβ	3H	γ	Sr90	MET	WQ	VOA	PCB	pH	
99071406-01			7/13/99		1500	704	smear	#14 Bldg 704 Emergency FN Rm 12k	1	100 cm²	x		x							
99071406-02			7/13/99		1500	704	smear	#17 Bldg 704 Emergency FN Rm 16k	1	100 cm²	x		x							

Must be one of the samplers

Transferred to :	Ken Kropp	E. Klug			
Signed by:	Ken Kropp	E. Klug			
Date/time	7/13/99 1615	7/14/99 1330			

OTHER ANALYSIS NOT LISTED	COMMENTS

BNL F 2963B WHITE COPY: SAMPLE CUSTODIAN YELLOW COPY: ANALYST PINK COPY: RECEIVER OR INTRA-LAB TRANSFER GOLDENROD COPY: SAMPLER

C.O.C. NUMBER
99071406

BROOKHAVEN NATIONAL LABORATORY
SAFETY AND ENVIRONMENTAL PROTECTION DIVISION
Radiological Analysis Laboratory

RADIOLOGICAL REPORT

Reviewed by: Robert R. Gaschott 7/15/99

SAMPLE I.D. NUMBER	ALPHA dpm	ALPHA Error	BETA dpm	BETA Error			MDL - dpm Alpha	MDL - dpm Beta	
99071406-01	6.4	9.1	5164.4	210.5			8.7	25.7	
99071406-02	3.2	6.4	6423.9	234.7			8.7	25.7	

Copy

C.O.C. Number
99071406

Brookhaven National Laboratory
Safety and Environmental Protection Division
Radiological Analysis Laboratory

GAMMA RESULTS

Reviewed by: Robert R. Gaschott 7/14/99

Sample I.D.	Nuclide Name	Activity uCi/smear	1-Sigma % Error
99071406-01	CS-137	3.91E-03	10.54
99071406-02	CS-137	5.42E-03	11.74

COPY

BNL RADIOLOGICAL SURVEY FORM

BLDG #: 704 LOCATION: Post Job Survey Primary Fan Room # 5 DATE/TIME: 7/20/99 @ 1530 REASON FOR SURVEY: ☐ ROUTINE ☑ SPECIAL RWP #: 990715-10

INSTRUMENTS. MODEL / SERIAL #: Lud-177 # 75655 CD 2/23/00 Lud 19 # 60002 CD 2/26/00
xetex extender # 46752 CD 4/27/00

DOSE RATES (HIGHEST) In µR/hr		AIRBORNE CONTAMINATION		
CONTACT	140 µR/hr	TIME	dpm	% DAC
GENERAL AREA	22-45 µR/hr		N/A	

LEGEND: O SMEAR SURVEY LOCATION O MASSLINN SURVEY LOCATION

XXX Y
ZZZ

XXX - CONTACT READING
ZZZ - READING @ 30 Cm
Y - RADIATION TYPE

#99-141

SMEAR SURVEY RESULTS (DPM/100 cm²)																															
³H (β-γ α) See Attached Results.																															
1.		8.		15.		22.																									
2.		9.		16.		23.																									
3.		10.		17.		24.																									
4.		11.		18.		25.																									
5.		12.		19.		26.																									
6.		13.		20.		27.																									
7.		14.		21.		28.																									

MASSLINN SURVEY RESULTS (DPM/LAS)	
1.	8.
2.	9.
3.	10.
4.	11.
5.	12.
6.	13.
7.	14.

N A

BROOKHAVEN GRAPHITE RESEARCH REACTOR
CHARACTERIZATION SURVEY MAP

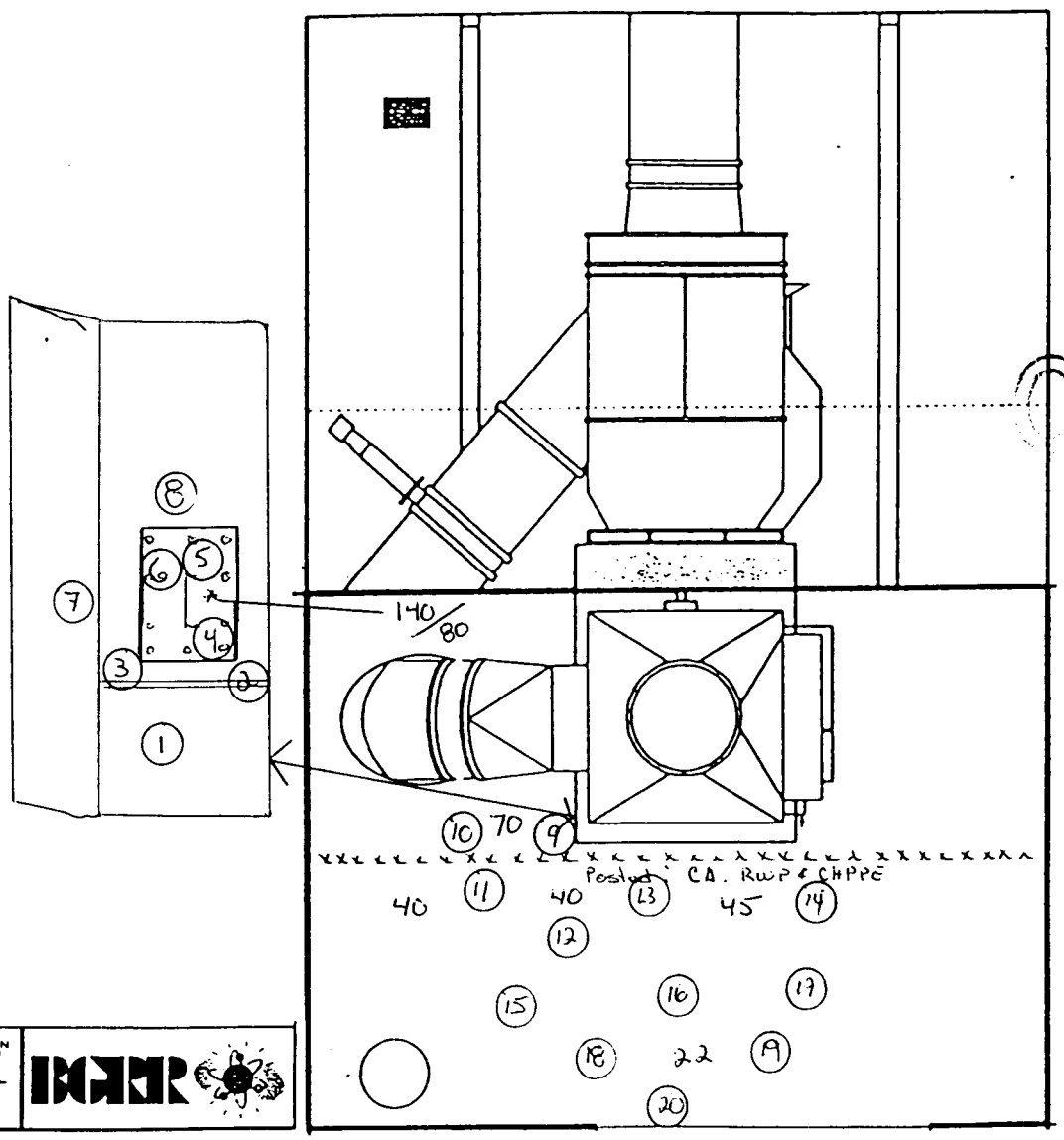

COPY

SURVEYED BY: Kenneth Hope 7/20/99 Signature/date REVIEWED BY: R P Miltenberger 7/26/99 Signature/date

REASON FOR SURVEY

BLDG #: 704 LOCATION: Primary Fan Room # 4 DATE/TIME: 1/13/00 1400 O ROUTINE O SPECIAL RWP #: 00-12GRR-0

INSTRUMENTS, MODEL / SERIAL #: LB-5100 092286 2-1900

DOSE RATES (HIGHEST)		AIRBORNE CONTAMINATION			LEGEND: O SMEAR SURVEY LOCATION O MASSLINN SURVEY LOCATION
CONTACT	NA	TIME	uCi/cc	% DAC	XXX Y ZZZ
GENERAL AREA	NA	NA	NA	NA	XXX - CONTACT READING ZZZ - READING @ 30 Cm Y - RADIATION TYPE

SMEAR SURVEY RESULTS (DPM/100 cm²) ³H B-γ α				MASSLINN SURVEY RESULTS (DPM/LAS)	
1. SEE ATTACHED	8. SEE ATTACHED	15. SEE ATTACHED	22. SEE ATTACHED	1. NA	8. NA
2.	9.	16.	23.	2.	9.
3.	10.	17.	24.	3.	10.
4.	11.	18.	25.	4.	11.
5.	12.	19.	26.	5.	12.
6.	13.	20.	27.	6.	13.
7.	14.	21.	28.	7.	14.

BROOKHAVEN GRAPHITE RESEARCH REACTOR
CHARACTERIZATION SURVEY MAP

PRE- DECON SURVEY.

SURVEY OF FAN ROOM #4 PRIOR TO REGRESSING ROPES - PRE- DECON.

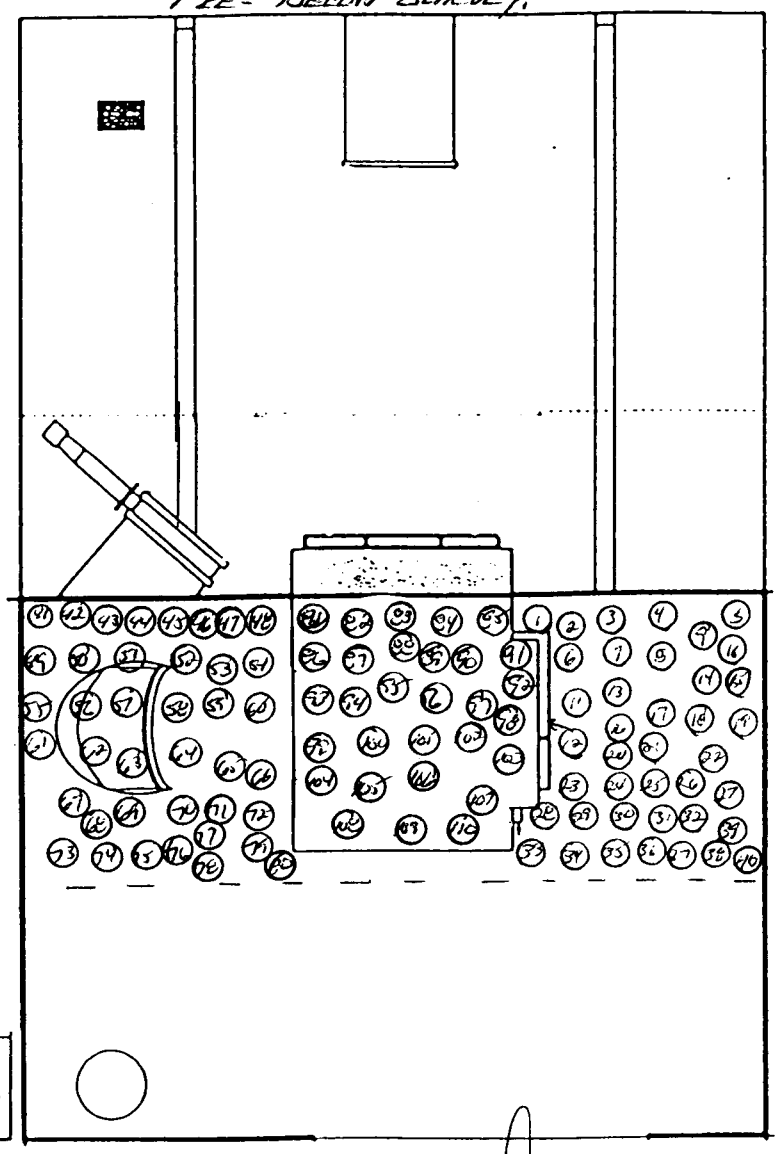

SURVEYED BY: Signature/date 2/10/00

REVIEWED BY: Dorian Morgan 2/8/2K Signature/date

1/15/00
2:54:54PM

Activity Report

FAN#4 DEPOST

Batch Name:	703	**Acquisition Date:**	1/15/00
Batch ID:	Wipe Sample Counrts - 200001151419	**Acquisition Time: (minutes)**	1.0
Group:	A		
Device:	LSAP Unit 1	**Operating Voltage: (volts)**	1,335.0
Selected Geometry:	1/8" Stainless Steel		

Efficiency Factors

Alpha Efficiency: (%)	0.30	±	0.00	**Beta Efficiency: (%)**	0.19	±	0.00

Sample ID	Quantity	Alpha (DPM)	2σ	Alpha MDA (DPM)	Beta Activity (DPM)	2σ	Beta MDA (DPM)
20000115141938-~~A1~~ 81	0.00	3.28	6.57	8.89	109.55	47.84	14.12
20000115142108-~~A2~~ 82	0.00	0.00	0.01	8.89	15.65	18.08	14.12
20000115142219-~~A3~~ 83	0.00	0.00	0.02	8.89	26.09	23.34	14.12
20000115142329-~~A4~~ 84	0.00	6.57	9.30	8.89	10.38	14.77	14.12
20000115142439-~~A5~~ 85	0.00	0.00	0.02	8.89	31.31	25.57	14.12
20000115142539-~~A6~~ 86	0.00	-0.01	0.06	8.89	93.93	44.29	14.12
20000115142649-~~A7~~ 87	0.00	-0.01	0.05	8.89	73.06	39.06	14.12
20000115142759-~~A8~~ 88	0.00	3.29	6.57	8.89	10.41	14.76	14.12
20000115142909-~~A9~~ 89	0.00	3.28	6.57	8.89	26.06	23.34	14.12
20000115143020-~~A10~~ 90	0.00	0.00	0.01	8.89	20.87	20.87	14.12
20000115143130-~~A11~~ 91	0.00	39.02	22.94	8.89	4,414.33	306.04	14.12
20000115143240-~~A12~~ 92	0.00	80.13	35.55	8.89	21,441.27	695.04	14.12
20000115143350-~~A13~~ 93	0.00	19.57	16.13	8.89	1,560.10	180.99	14.12
20000115143501-~~A14~~ 94	0.00	6.50	9.31	8.89	756.60	125.85	14.12
20000115143611-~~A95~~ 95	0.00	-0.04	0.25	8.89	391.37	90.45	14.12
20000115143721-~~A16~~ 96	0.00	3.27	6.57	8.89	187.83	62.64	14.12
20000115143831-~~A17~~ 97	0.00	-0.02	0.11	8.89	177.42	60.88	14.12
20000115143941-~~A18~~ 98	0.00	6.56	9.30	8.89	151.27	56.22	14.12
20000115144051-~~A19~~ 99	0.00	-0.05	0.31	8.89	485.30	100.74	14.12
20000115144201-~~A20~~ 100	0.00	-0.02	0.15	8.89	229.61	69.26	14.12
20000115144311-~~A21~~ 101	0.00	19.32	16.32	8.89	4,169.25	297.27	14.12
20000115144421-~~A22~~ 102	0.00	3.27	6.57	8.89	219.14	67.66	14.12
20000115144531-~~A23~~ 103	0.00	3.27	6.57	8.89	193.05	63.51	14.12
20000115144641-~~A24~~ 104	0.00	6.55	9.30	8.89	219.11	67.67	14.12
20000115144752-~~A25~~ 105	0.00	-0.02	0.12	8.89	182.64	61.76	14.12
20000115144902-~~A26~~ 106	0.00	3.27	6.57	8.89	146.08	55.24	14.12
20000115145012-~~A27~~ 107	0.00	19.08	16.66	8.89	6,773.18	380.69	14.12
20000115145122-~~A28~~ 108	0.00	3.26	6.58	8.89	297.41	78.84	14.12
20000115145232-~~A29~~ 109	0.00	3.19	6.60	8.89	965.36	142.21	14.12
20000115145342-~~A30~~ 110	0.00	-0.02	0.13	8.89	198.30	64.36	14.12

Reviewed by: Dorian Mergy

1/13/00
2:50:03PM

Activity Report

FANHOUSE#4 DEPOST RIGHT SIDE

Batch Name:	677	**Acquisition Date:**	1/13/00
Batch ID:	Wipe Sample Counrts - 200001131403	**Acquisition Time: (minutes)**	1.0
Group:	A		
Device:	LSAP Unit 1	**Operating Voltage: (volts)**	1,335.0
Selected Geometry:	1/8" Stainless Steel		

Efficiency Factors

Alpha Efficiency: (%)	0.30	±	0.00	**Beta Efficiency: (%)**	0.19	±	0.00

Sample ID	Quantity	Alpha (DPM)	2σ	Alpha MDA (DPM)	Beta Activity (DPM)	2σ	Beta MDA (DPM)
20000113140315-A1	0.00	6.55	9.30	8.89	234.76	70.04	14.12
20000113140445-A2	0.00	-0.03	0.18	8.89	281.79	76.73	14.12
20000113140555-A3	0.00	-0.01	0.04	8.89	67.84	37.63	14.12
20000113140655-A4	0.00	-0.01	0.05	8.89	83.49	41.75	14.12
20000113140805-A5	0.00	-0.01	0.04	8.89	57.40	34.62	14.12
20000113140916-A6	0.00	-0.01	0.04	8.89	67.84	37.63	14.12
20000113141026-A7	0.00	3.27	6.57	8.89	166.96	59.06	14.12
20000113141136-A8	0.00	-0.01	0.04	8.89	62.62	36.16	14.12
20000113141246-A9	0.00	-0.01	0.09	8.89	140.89	54.24	14.12
20000113141356-A10	0.00	-0.03	0.17	8.89	276.57	76.02	14.12
00113141506-A11	0.00	-0.01	0.05	8.89	78.27	40.43	14.12
20000113141616-A12	0.00	3.28	6.57	8.89	73.03	39.06	14.12
20000113141726-A13	0.00	0.00	0.02	8.89	36.53	27.61	14.12
20000113141836-A14	0.00	0.00	0.03	8.89	46.96	31.31	14.12
20000113141946-A95	0.00	-0.01	0.05	8.89	73.06	39.06	14.12
20000113142057-A16	0.00	-0.01	0.09	8.89	135.68	53.23	14.12
20000113142207-A17	0.00	3.28	6.57	8.89	93.90	44.29	14.12
20000113142317-A18	0.00	3.27	6.57	8.89	130.43	52.20	14.12
20000113142427-A19	0.00	3.27	6.57	8.89	151.30	56.22	14.12
20000113142537-A20	0.00	0.00	0.03	8.89	46.96	31.31	14.12
20000113142647-A21	0.00	-0.01	0.07	8.89	114.80	48.96	14.12
20000113142757-A22	0.00	-0.01	0.05	8.89	73.06	39.06	14.12
20000113142907-A23	0.00	-0.01	0.07	8.89	114.80	48.96	14.12
20000113143018-A24	0.00	-0.01	0.04	8.89	67.84	37.63	14.12
20000113143128-A25	0.00	0.00	0.03	8.89	46.96	31.31	14.12
20000113143238-A26	0.00	-0.01	0.04	8.89	62.62	36.16	14.12
20000113143348-A27	0.00	-0.01	0.06	8.89	88.71	43.04	14.12
20000113143458-A28	0.00	-0.01	0.04	8.89	57.40	34.62	14.12
20000113143609-A29	0.00	0.00	0.03	8.89	46.96	31.31	14.12
20000113143719-A30	0.00	0.00	0.03	8.89	41.75	29.52	14.12
20000113143828-A31	0.00	3.28	6.57	8.89	46.94	31.31	14.12
20000113143939-A32	0.00	-0.01	0.06	8.89	93.93	44.29	14.12
20000113144049-A33	0.00	-0.01	0.04	8.89	57.40	34.62	14.12
20000113144159-A34	0.00	0.00	0.02	8.89	36.53	27.61	14.12
00113144309-A35	0.00	0.00	0.01	8.89	20.87	20.87	14.12
00113144419-A36	0.00	0.00	0.01	8.89	10.44	14.76	14.12

Activity Report

Efficiency Factors

Alpha Efficiency: (%)	0.30	±	0.00	**Beta Efficiency: (%)**	0.19	±	0.00

Sample ID	Quantity	Alpha (DPM)	2σ	Alpha MDA (DPM)	Beta Activity (DPM)	2σ	Beta MDA (DPM)
20000113144519-A37	0.00	3.27	6.57	8.89	135.65	53.23	14.12
20000113144629-A38	0.00	-0.01	0.05	8.89	78.27	40.43	14.12
20000113144739-A39	0.00	0.00	0.01	8.89	10.44	14.76	14.12
20000113144849-A40	0.00	0.00	0.01	8.89	10.44	14.76	14.12

Reviewed by: Dorion Meyer

Activity Report

1/20/00
12:14:59PM

FAN#4 DEPOST LEFT SIDE

Batch Name:	740	**Acquisition Date:**	1/20/00
Batch ID:	Wipe Sample Counrts - 200001201127	**Acquisition Time: (minutes)**	1.0
Group:	A		
Device:	LSAP Unit 1	**Operating Voltage: (volts)**	1,335.0
Selected Geometry:	1/8" Stainless Steel		

Efficiency Factors

Alpha Efficiency: (%)	0.30	±	0.00	**Beta Efficiency: (%)**	0.19	±	0.00

Sample ID	Quantity	Alpha (DPM)	2σ	Alpha MDA (DPM)	Beta Activity (DPM)	2σ	Beta MDA (DPM)
20000120112757-~~A1~~ 41	0.00	3.29	6.57	8.89	-0.03	0.20	14.12
20000120112927-~~A2~~ 42	0.00	-0.01	0.08	8.89	130.46	52.20	14.12
20000120113037-~~A3~~ 43	0.00	0.00	0.02	8.89	31.31	25.57	14.12
20000120113147-~~A4~~ 44	0.00	3.28	6.57	8.89	83.46	41.75	14.12
20000120113257-~~A5~~ 45	0.00	0.00	0.01	8.89	15.65	18.08	14.12
20000120113407-~~A6~~ 46	0.00	3.28	6.57	8.89	41.72	29.52	14.12
20000120113518-~~A7~~ 47	0.00	-0.01	0.05	8.89	83.49	41.75	14.12
20000120113628-~~A8~~ 48	0.00	-0.01	0.04	8.89	57.40	34.62	14.12
20000120113728-~~A9~~ 49	0.00	-0.02	0.13	8.89	203.51	65.20	14.12
20000120113838-~~A10~~ 50	0.00	3.28	6.57	8.89	62.59	36.16	14.12
20000120113948-~~A11~~ 51	0.00	0.00	0.03	8.89	52.18	33.01	14.12
20000120114059-~~A12~~ 52	0.00	-0.01	0.04	8.89	57.40	34.62	14.12
20000120114209-~~A13~~ 53	0.00	0.00	0.02	8.89	36.53	27.61	14.12
20000120114319-~~A14~~ 54	0.00	-0.01	0.04	8.89	62.62	36.16	14.12
20000120114429-~~A95~~ 55	0.00	0.00	0.03	8.89	52.18	33.01	14.12
20000120114539-~~A16~~ 56	0.00	0.00	0.03	8.89	52.18	33.01	14.12
20000120114649-~~A18~~ 57	0.00	3.28	6.57	8.89	52.15	33.01	14.12
20000120114759-~~A17~~ 58	0.00	3.28	6.57	8.89	67.81	37.63	14.12
20000120114909-~~A19~~ 59	0.00	-0.01	0.04	8.89	67.84	37.63	14.12
20000120115019-~~A20~~ 60	0.00	-0.01	0.04	8.89	67.84	37.63	14.12
20000120115130-~~A21~~ 61	0.00	0.00	0.03	8.89	41.75	29.52	14.12
20000120115240-~~A22~~ 62	0.00	3.28	6.57	8.89	31.28	25.57	14.12
20000120115350-~~A23~~ 63	0.00	0.00	0.01	8.89	20.87	20.87	14.12
20000120115500-~~A24~~ 64	0.00	0.00	0.02	8.89	26.09	23.34	14.12
20000120115610-~~A25~~ 65	0.00	3.28	6.57	8.89	26.06	23.34	14.12
20000120115720-~~A26~~ 66	0.00	0.00	0.01	8.89	20.87	20.87	14.12
20000120115830-~~A27~~ 67	0.00	0.00	0.03	8.89	52.18	33.01	14.12
20000120115940-~~A28~~ 68	0.00	0.00	0.02	8.89	31.31	25.57	14.12
20000120120051-~~A29~~ 69	0.00	0.00	0.01	8.89	20.87	20.87	14.12
20000120120200-~~A30~~ 70	0.00	0.00	0.01	8.89	20.87	20.87	14.12
20000120120311-~~A31~~ 71	0.00	0.00	0.01	8.89	15.65	18.08	14.12
20000120120421-~~A32~~ 72	0.00	0.00	0.01	8.89	20.87	20.87	14.12
20000120120531-~~A33~~ 73	0.00	0.00	0.02	8.89	26.09	23.34	14.12
20000120120641-~~A34~~ 74	0.00	3.29	6.57	8.89	5.19	10.44	14.12
20000120120751-~~A35~~ 75	0.00	0.00	0.03	8.89	52.18	33.01	14.12
20000120120901-~~A36~~ 76	0.00	0.00	0.02	8.89	36.53	27.61	14.12

Activity Report

Efficiency Factors

Alpha Efficiency: (%)	0.30	±	0.00	**Beta Efficiency: (%)**	0.19	±	0.00

Sample ID	Quantity	Alpha (DPM)	2σ	Alpha MDA (DPM)	Beta Activity (DPM)	2σ	Beta MDA (DPM)
20000120121011-A~~37~~77	0.00	0.00	0.01	8.89	20.87	20.87	14.12
20000120121121-A~~38~~78	0.00	0.00	0.02	8.89	26.09	23.34	14.12
20000120121232-A~~39~~79	0.00	0.00	0.03	8.89	41.75	29.52	14.12
20000120121342-A~~40~~80	0.00	0.00	0.02	8.89	36.53	27.61	14.12

Reviewed by: Dorian Morgan

BNL RADIOLOGICAL SURVEY FORM

REASON FOR SURVEY ☐ ROUTINE ☒ SPECIAL RWP #: 990715-10

BLDG #: 704 LOCATION: Fan House #5 DATE/TIME: 7-20-99/1300

Inspection plate removal.

INSTRUMENTS, MODEL / SERIAL #: Ludlum 3 #50545 cd 2-8-00 RO-20 #2784 cd 01-06-99
Xetex extender 46752 cd 4-27-00

DOSE RATES (HIGHEST) mR/hr		AIRBORNE CONTAMINATION			LEGEND: O SMEAR SURVEY LOCATION	O MASSLINN SURVEY LOCATION
CONTACT	5mR β⁻	TIME	uCi/cc	%DAC	XXX Y / ZZZ	XXX - CONTACT READING; ZZZ - READING @ 30 Cm; Y - RADIATION TYPE
GENERAL AREA	<.2	See attached				#99-140

SMEAR SURVEY RESULTS (DPM/100 cm²) ³H (B-γ) α										MASSLINN SURVEY RESULTS (DPM/LAS)			
1.	6 K	8.		15.		22.		1.		8.	
2.	4 K	9.		16.		23.		2.		9.	
3.	7 K	10.		17.		24.		3.		10.	
4.	20K N	11.	N	18.	N	25.	N	4.	N	11.	N A
5.	A	12.	A	19.	A	26.	A	5.	A	12.	
6.		13.		20.		27.		6.		13.	
7.		14.		21.		28.		7.		14.	

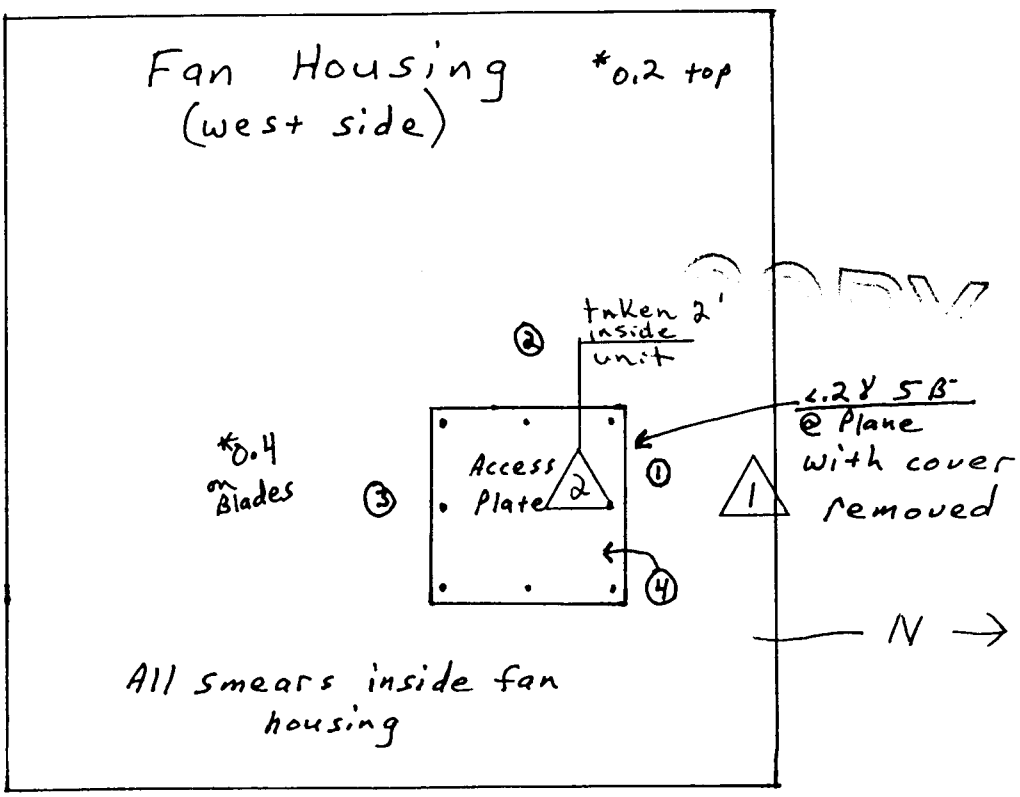

* dose rates taken inside housing with Xetex extender.

*0.8 bottom-west

*0.7 bottom-east

SURVEYED BY: Wm H Meldrum 7-20-99 Signature/date

REVIEWED BY: R P Miltenberger 7/26/99 Signature/date

C.O.C. NUMBER
99072105

BROOKHAVEN NATIONAL LABORATORY
SAFETY AND ENVIRONMENTAL PROTECTION DIVISION
Radiological Analysis Laboratory

RADIOLOGICAL REPORT

99-140

Reviewed by: Robert R. Gaschott 7/22/99

SAMPLE I.D. NUMBER	ALPHA uCi/cc	ALPHA Error	BETA uCi/cc	BETA Error	% DAC		MDL - uCi/cc Alpha	MDL - uCi/cc Beta		
99072105-05	-3.61E-13	3.05E-13	-3.69E-12	1.60E-12	<.1		3.76E-13	2.49E-12		
99072105-06	5.23E-13	9.38E-13	1.43E-10	7.16E-12	<.1		2.06E-12	1.59E-11		

BCM
7/26/99

LB5100-W Low Background Counting System – Smear Analysis

Date: 7/21/99
Counting Unit id: 1
Data file name: C:\LBXL\UNIT1\SME00223.XLD
Batch Ended: 7/21/99 15:33
Crosstalk Correction: Not Applied

Alpha activity action level (DPM): 20.00
Beta activity action level (DPM): 200.00
Certainty level for MDA and flags: 95.00%
High Voltage Setting: 1327.5

Application Revision: 2.1.4

Application Version: Standard

Alpha efficiency log file: PU239AB
Alpha Efficiency: 18.94%
Alpha to Beta Crosstalk: 6.46%
Alpha Background (CPM): 0.039
Alpha Correction Factor: 1.000

Beta efficiency log file: TC99AB
Beta Efficiency: 26.99%
Beta into Alpha Crosstalk: 0.20%
Beta Background (CPM): 1.43
Beta Correction Factor: 1.000

Batch ID: Bldg 704 Fan Unit 5 - O/S Housing

	Alpha Activity				Beta Activity				Count	Alpha	Beta	Completion	Gamma
Carrier	DPM	1σ	flags	MDA	DPM	1σ	flags	MDA	time (min)	CPM	CPM	Date - Time	DPM
1	5.074	5.28	<AL	17.72	28.04	11.13	<AL	24.61	1.00	0.961	7.57	7/21/99 15:11	-130.00
2	-0.206	5.28	<MDA	17.72	5.82	6.42	<MDA	24.61	1.00	-0.039	1.57	7/21/99 15:13	-130.00
3	-0.206	5.28	<MDA	17.72	68.80	16.61	<AL	24.61	1.00	-0.039	18.57	7/21/99 15:14	-130.00
4	-0.206	5.28	<MDA	17.72	20.64	9.81	<AL	24.61	1.00	-0.039	5.57	7/21/99 15:15	-130.00
5	-0.206	5.28	<MDA	17.72	2.11	5.24	<MDA	24.61	1.00	-0.039	0.57	7/21/99 15:16	-130.00
6	-0.206	5.28	<MDA	17.72	-1.59	3.71	<MDA	24.61	1.00	-0.039	-0.43	7/21/99 15:17	-130.00
7	5.074	5.28	<AL	17.72	9.52	7.41	<AL	24.61	1.00	0.961	2.57	7/21/99 15:18	-130.00
8	-0.206	5.28	<MDA	17.72	5.82	6.42	<MDA	24.61	1.00	-0.039	1.57	7/21/99 15:20	-130.00
9	-0.206	5.28	<MDA	17.72	35.45	12.31	<AL	24.61	1.00	-0.039	9.57	7/21/99 15:21	-130.00
10	-0.206	5.28	<MDA	17.72	50.27	14.38	<AL	24.61	1.00	-0.039	13.57	7/21/99 15:22	-130.00
11	-0.206	5.28	<MDA	17.72	5.82	6.42	<MDA	24.61	1.00	-0.039	1.57	7/21/99 15:23	-130.00
12	-0.206	5.28	<MDA	17.72	5.82	6.42	<MDA	24.61	1.00	-0.039	1.57	7/21/99 15:24	-130.00
13	-0.206	5.28	<MDA	17.72	-5.30	3.71	<MDA	24.61	1.00	-0.039	-1.43	7/21/99 15:25	-130.00
14	-0.206	5.28	<MDA	17.72	-1.59	3.71	<MDA	24.61	1.00	-0.039	-0.43	7/21/99 15:27	-130.00
15	-0.206	5.28	<MDA	17.72	-5.30	3.71	<MDA	24.61	1.00	-0.039	-1.43	7/21/99 15:28	-130.00
16	-0.206	5.28	<MDA	17.72	2.11	5.24	<MDA	24.61	1.00	-0.039	0.57	7/21/99 15:29	-130.00
17	-0.206	5.28	<MDA	17.72	5.82	6.42	<MDA	24.61	1.00	-0.039	1.57	7/21/99 15:30	-130.00
18	-0.206	5.28	<MDA	17.72	13.23	8.29	<AL	24.61	1.00	-0.039	3.57	7/21/99 15:31	-130.00
19	-0.206	5.28	<MDA	17.72	2.11	5.24	<MDA	24.61	1.00	-0.039	0.57	7/21/99 15:32	-130.00
20	-0.206	5.28	<MDA	17.72	-1.59	3.71	<MDA	24.61	1.00	-0.039	-0.43	7/21/99 15:33	-130.00

Reviewed 7-21-99
[signature] 7/21/99

RM 7/20/99

BNL RADIOLOGICAL SURVEY FORM

REASON FOR SURVEY

BLDG #: 704 LOCATION: FAN House UNIT # 5 DATE/TIME: 6/25/99 @ 1130 ROUTINE ☐ SPECIAL ☑ RWP #: 990101-1

INSTRUMENTS, MODEL / SERIAL #: Lud 177 # 75655 cp 2/23/00 L135100-W # 42212 CD 10/10/99

DOSE RATES (HIGHEST)		AIRBORNE CONTAMINATION			LEGEND: O SMEAR SURVEY LOCATION ☐ MASSLINN SURVEY LOCATION
CONTACT	N/A	TIME	uCi/cc	% DAC	XXX Y / ZZZ — XXX = CONTACT READING; ZZZ = READING @ 30 Cm; Y = RADIATION TYPE
GENERAL AREA	↓	N/A	→	→	# 99-124

SMEAR SURVEY RESULTS (DPM/100 cm²) ^{3}H (B-γ α) See Attached Results

1.		8.		15.		22.	
2.		9.		16.		23.	
3.	N	10.		17.		24.	
4.		11.		18.		25.	
5.	A	12.		19.		26.	
6.		13.		20.		27.	
7.		14.		21.		28.	

MASSLINN SURVEY RESULTS (DPM/LAS)

1.	<1000	8.	N/A
2.	↓	9.	↓
3.	↓	10.	↓
4.	↓	11.	↓
5.	N/A	12.	↓
6.	↓	13.	↓
7.	↓	14.	↓

UPPER I-BEAMS

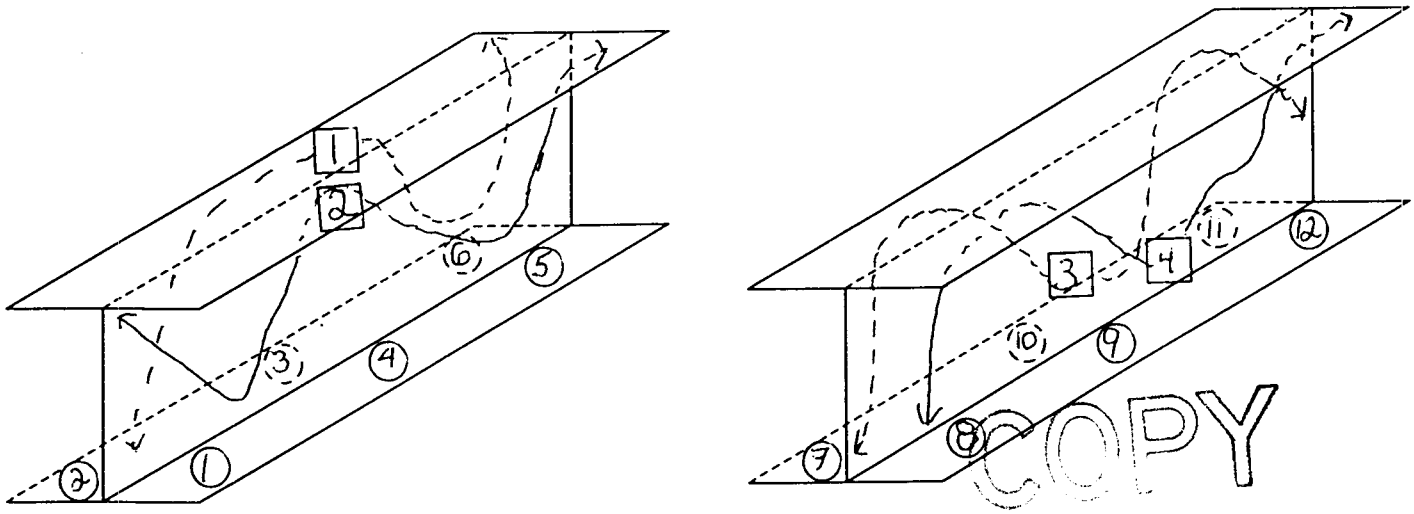

SURVEYED BY: [signature] 6/28/99 Signature/date

REVIEWED BY: RP Miltenberger 7/2/99 Signature/date

BNL RADIOLOGICAL SURVEY FORM

REASON FOR SURVEY ☐ ☑

BLDG #: 704 LOCATION: FAN HOUSE UNIT # 4 DATE/TIME: 6/25/99 @ 1130 ROUTINE SPECIAL RWP #: 990101-1

INSTRUMENTS, MODEL / SERIAL #: Lud 177 # 75655 CD 2/23/00 LB 5100-W # 42212 CD 10/16/99

DOSE RATES (HIGHEST)		AIRBORNE CONTAMINATION			LEGEND: O SMEAR SURVEY LOCATION O MASSLINN SURVEY LOCATION
CONTACT	N/A	TIME	nCi/cc	%DAC	XXX Y / ZZZ — XXX - CONTACT READING, ZZZ - READING @ 30 Cm, Y - RADIATION TYPE
GENERAL AREA	↓	N/A	→	→	# 99-124

SMEAR SURVEY RESULTS (DPM/100 cm²) ³H (B-γ α) See Attached Results

1.		8.		15.		22.	
2.		9.		16.		23.	
3.	N	10.		17.		24.	
4.		11.		18.		25.	
5.	N	12.		19.		26.	
6.		13.		20.		27.	
7.		14.		21.		28.	

MASSLINN SURVEY RESULTS (DPM/LAS)

1.	N/A	8.	<1000
2.		9.	N/A
3.		10.	
4.	↓	11.	
5.	<1000	12.	
6.		13.	
7.	↓	14.	↓

UPPER I-BEAMS

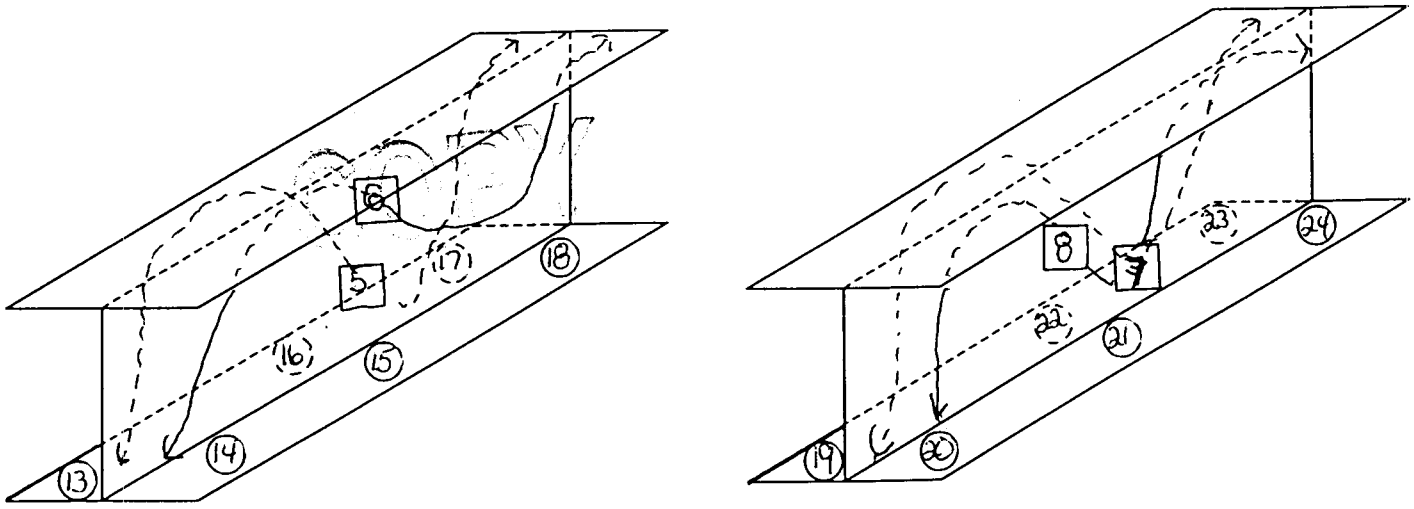

SURVEYED BY: [signature] 6/28/99 Signature/date

REVIEWED BY: RP Mittenberg 7/2/99 Signature/date

BNL RADIOLOGICAL SURVEY FORM

REASON FOR SURVEY ☐ ☑

BLDG #: 704 LOCATION: FAN HOUSE UNIT # 3 DATE/TIME: 6/25/99 @ 1340 ROUTINE SPECIAL RWP #: 99-0101-1

INSTRUMENTS, MODEL / SERIAL #: Lvd 177 # 75655 CD ~~KS 2/25/99~~ 2/23/00 LB5100-W # 42212 CD 10/16/99

DOSE RATES (HIGHEST)		AIRBORNE CONTAMINATION			LEGEND: O SMEAR SURVEY LOCATION	O MASSLINN SURVEY LOCATION
CONTACT	N/A	TIME	nCi/cc	%DAC	XXX Y / ZZZ	XXX - CONTACT READING ZZZ - READING @ 30 Cm Y - RADIATION TYPE
GENERAL AREA	↓	N/A	→	→		# 99-124

SMEAR SURVEY RESULTS (DPM/100 cm²) ³H B-γ α								MASSLINN SURVEY RESULTS (DPM/LAS)			
1.		8.		15.		22.		1.	N/A	8.	N/A
2.		9.		16.		23.		2.	↓	9.	<1000
3.		10.		17.		24.		3.	↓	10.	↓
4.		11.		18.		25.		4.	↓	11.	↓
5.		12.		19.		26.		5.	↓	12.	↓
6.		13.		20.		27.		6.	↓	13.	N/A
7.		14.		21.		28.		7.	↓	14.	↓

UPPER I-BEAMS

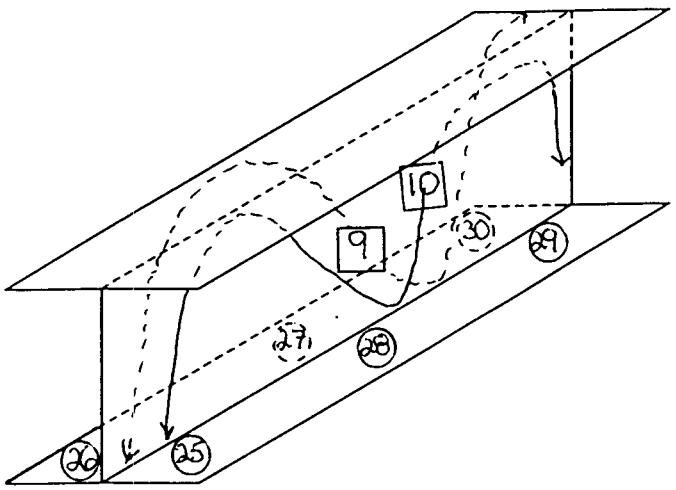

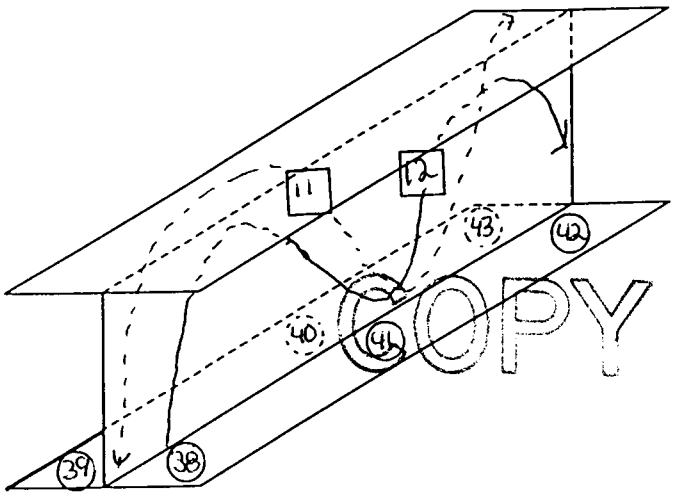

COPY

SMEARS # 31 - # 37
ON trolley

SMEARS # 44 - # 50
ON trolley

SURVEYED BY: [signature] 6/28/99 Signature/date REVIEWED BY: [signature] 7/2/99 Signature/date

BNL RADIOLOGICAL SURVEY FORM

REASON FOR SURVEY ☐ ☑

LDG #: 704 LOCATION: FAN House UNIT # 2 DATE/TIME: 6/25/99 @ 1340 ROUTINE SPECIAL RWP #: 99-0101-1

NSTRUMENTS. MODEL / SERIAL #: Lud 177 # 75655 CD 2/23/00 LB 5100-W 42212 CD 10/16/99

DOSE RATES (HIGHEST)		AIRBORNE CONTAMINATION			LEGEND: O SMEAR SURVEY LOCATION ☐ MASSLINN SURVEY LOCATION
CONTACT	N/A	TIME	nCi/cc	%DAC	XXX Y / ZZZ — XXX - CONTACT READING; ZZZ - READING @ 30 Cm; Y - RADIATION TYPE
GENERAL AREA	↓	N/A	→	→	#99-124

SMEAR SURVEY RESULTS (DPM/100 cm²) ³H B-γ α								MASSLINN SURVEY RESULTS (DPM/LAS)			
1.		8.		15.		22.		1.	N/A	8.	N/A
2.		9.		16.		23.		2.		9.	
3.		10.		17.		24.		3.		10.	
4.		11.		18.		25.		4.		11.	
5.		12.		19.		26.		5.		12.	↓
6.		13.		20.		27.		6.		13.	<1000
7.		14.		21.		28.		7.	↓	14.	
										15.	
										16.	

UPPER I- BEAMS

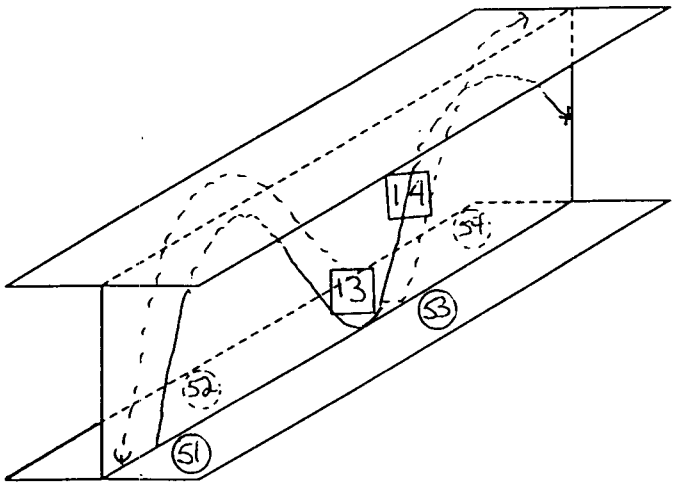

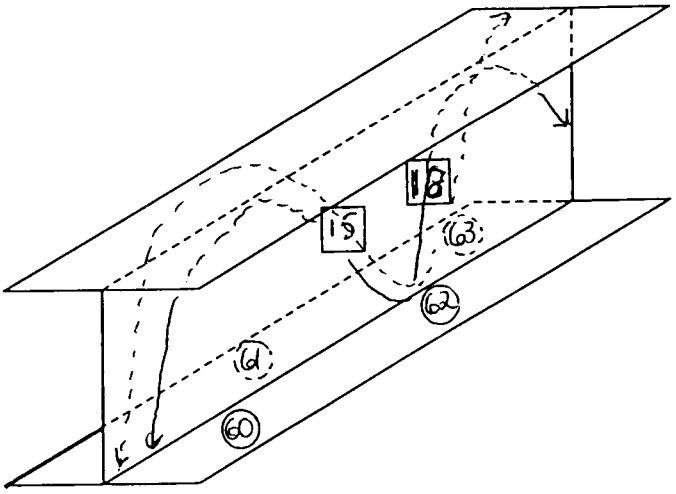

SMEARS # 55 - # 59
ON trolley

SMEARS # 64-68
ON trolley

SURVEYED BY: Kenneth Krupp 6/28/99 REVIEWED BY: R P Mattenberger 7/2/99
Signature/date Signature/date

LB5100-W Low Background Counting System – Smear Analysis #99-124

42212 CD 10/16/99

Date: 6/25/99

Counting Unit id: 1

Data file name: C:\LBXL\UNIT1\SME00168.XLD

Batch Ended: 6/25/99 12:28

Crosstalk Correction: Not Applied

Alpha activity action level (DPM): 20.00

Beta activity action level (DPM): 200.00

Certainty level for MDA and flags: 95.00%

High Voltage Setting: 1327.5

Application Revision: 2.1.4

Application Version: Standard

Alpha efficiency log file: PU239AB

Alpha Efficiency: 18.94%

Alpha to Beta Crosstalk: 6.46%

Alpha Background (CPM): 0.039

Alpha Correction Factor: 1.000

Beta efficiency log file: TC99AB

Beta Efficiency: 26.99%

Beta into Alpha Crosstalk: 0.20%

Beta Background (CPM): 1.43

Beta Correction Factor: 1.000

Batch ID: FAN HOUSE SUPPORT BEAMS #S 5,4,3,2,

	Alpha Activity				Beta Activity								
Carrier	DPM	1σ	flags	MDA	DPM	1σ	flags	MDA	Count time (min)	Alpha CPM	Beta CPM	Completion Date - Time	Gamma DPM
1	-0.206	5.28	<MDA	17.72	83.62	18.21	<AL	24.61	1.00	-0.039	22.57	6/25/99 12:01	-130.00
2	10.354	7.47	At AL	17.72	65.09	16.19	<AL	24.61	1.00	1.961	17.57	6/25/99 12:02	-130.00
3	5.074	5.28	<AL	17.72	39.16	12.85	<AL	24.61	1.00	0.961	10.57	6/25/99 12:04	-130.00
4	-0.206	5.28	<MDA	17.72	83.62	18.21	<AL	24.61	1.00	-0.039	22.57	6/25/99 12:05	-130.00
5	-0.206	5.28	<MDA	17.72	150.30	24.16	<AL	24.61	1.00	-0.039	40.57	6/25/99 12:06	-130.00
6	-0.206	5.28	<MDA	17.72	87.32	18.59	<AL	24.61	1.00	-0.039	23.57	6/25/99 12:07	-130.00
7	-0.206	5.28	<MDA	17.72	461.50	42.37	>AL	24.61	1.00	-0.039	124.57	6/25/99 12:08	-130.00
8	-0.206	5.28	<MDA	17.72	161.41	25.02	At AL	24.61	1.00	-0.039	43.57	6/25/99 12:09	-130.00
9	-0.206	5.28	<MDA	17.72	72.50	17.03	<AL	24.61	1.00	-0.039	19.57	6/25/99 12:10	-130.00
10	-0.206	5.28	<MDA	17.72	265.15	32.00	>AL	24.61	1.00	-0.039	71.57	6/25/99 12:12	-130.00
11	-0.206	5.28	<MDA	17.72	102.14	20.03	<AL	24.61	1.00	-0.039	27.57	6/25/99 12:13	-130.00
12	-0.206	5.28	<MDA	17.72	98.43	19.68	<AL	24.61	1.00	-0.039	26.57	6/25/99 12:14	-130.00
13	5.074	5.28	<AL	17.72	65.09	16.19	<AL	24.61	1.00	0.961	17.57	6/25/99 12:15	-130.00
14	5.074	5.28	<AL	17.72	79.91	17.83	<AL	24.61	1.00	0.961	21.57	6/25/99 12:16	-130.00
15	5.074	5.28	<AL	17.72	50.27	14.38	<AL	24.61	1.00	0.961	13.57	6/25/99 12:17	-130.00
16	-0.206	5.28	<MDA	17.72	120.66	21.71	<AL	24.61	1.00	-0.039	32.57	6/25/99 12:19	-130.00
17	10.354	7.47	At AL	17.72	68.80	16.61	<AL	24.61	1.00	1.961	18.57	6/25/99 12:20	-130.00
18	5.074	5.28	<AL	17.72	191.05	27.18	At AL	24.61	1.00	0.961	51.57	6/25/99 12:21	-130.00
19	-0.206	5.28	<MDA	17.72	61.39	15.76	<AL	24.61	1.00	-0.039	16.57	6/25/99 12:22	-130.00
20	5.074	5.28	<AL	17.72	102.14	20.03	<AL	24.61	1.00	0.961	27.57	6/25/99 12:23	-130.00
21	-0.206	5.28	<MDA	17.72	154.01	24.45	<AL	24.61	1.00	-0.039	41.57	6/25/99 12:24	-130.00
22	-0.206	5.28	<MDA	17.72	131.78	22.66	<AL	24.61	1.00	-0.039	35.57	6/25/99 12:25	-130.00
23	-0.206	5.28	<MDA	17.72	105.84	20.38	<AL	24.61	1.00	-0.039	28.57	6/25/99 12:27	-130.00
24	10.354	7.47	At AL	17.72	220.69	29.20	At AL	24.61	1.00	1.961	59.57	6/25/99 12:28	-130.00

reviewed 6/25/99 KK

COPY

LB5100-W Low Background Counting System – Smear Analysis #99-124

#42212 CD 10/16/99

Date: 6/25/99

Counting Unit id: 1

Data file name: C:\LBXL\UNIT1\SME00170.XLD

Batch Ended: 6/25/99 15:17

Crosstalk Correction: Not Applied

Alpha activity action level (DPM): 20.00

Beta activity action level (DPM): 200.00

Certainty level for MDA and flags: 95.00%

High Voltage Setting: 1327.5

Application Revision: 2.1.4

Application Version: Standard

Alpha efficiency log file: PU239AB

Alpha Efficiency: 18.94%

Alpha to Beta Crosstalk: 6.46%

Alpha Background (CPM): 0.039

Alpha Correction Factor: 1.000

Beta efficiency log file: TC99AB

Beta Efficiency: 26.99%

Beta into Alpha Crosstalk: 0.20%

Beta Background (CPM): 1.43

Beta Correction Factor: 1.000

Batch ID: BGRR FANHOUSE SUPPORY BEAMS

	Alpha Activity				Beta Activity								
Carrier	DPM	1σ	flags	MDA	DPM	1σ	flags	MDA	Count time (min)	Alpha CPM	Beta CPM	Completion Date - Time	Gamma DPM
25	-0.206	5.28	<MDA	17.72	65.09	16.19	<AL	24.61	1.00	-0.039	17.57	6/25/99 14:28	-130.00
26	10.354	7.47	At AL	17.72	87.32	18.59	<AL	24.61	1.00	1.961	23.57	6/25/99 14:29	-130.00
27	-0.206	5.28	<MDA	17.72	113.25	21.05	<AL	24.61	1.00	-0.039	30.57	6/25/99 14:30	-130.00
28	-0.206	5.28	<MDA	17.72	91.02	18.96	<AL	24.61	1.00	-0.039	24.57	6/25/99 14:31	-130.00
29	5.074	5.28	<AL	17.72	120.66	21.71	<AL	24.61	1.00	0.961	32.57	6/25/99 14:32	-130.00
30	-0.206	5.28	<MDA	17.72	113.25	21.05	<AL	24.61	1.00	-0.039	30.57	6/25/99 14:33	-130.00
31	-0.206	5.28	<MDA	17.72	16.93	9.08	<AL	24.61	1.00	-0.039	4.57	6/25/99 14:34	-130.00
32	-0.206	5.28	<MDA	17.72	24.34	10.49	<AL	24.61	1.00	-0.039	6.57	6/25/99 14:36	-130.00
33	-0.206	5.28	<MDA	17.72	20.64	9.81	<AL	24.61	1.00	-0.039	5.57	6/25/99 14:37	-130.00
34	-0.206	5.28	<MDA	17.72	-1.59	3.71	<MDA	24.61	1.00	-0.039	-0.43	6/25/99 14:38	-130.00
35	-0.206	5.28	<MDA	17.72	9.52	7.41	<AL	24.61	1.00	-0.039	2.57	6/25/99 14:39	-130.00
36	-0.206	5.28	<MDA	17.72	5.82	6.42	<MDA	24.61	1.00	-0.039	1.57	6/25/99 14:40	-130.00
37	5.074	5.28	<AL	17.72	113.25	21.05	<AL	24.61	1.00	0.961	30.57	6/25/99 14:41	-130.00
38	5.074	5.28	<AL	17.72	157.71	24.73	<AL	24.61	1.00	0.961	42.57	6/25/99 14:43	-130.00
39	5.074	5.28	<AL	17.72	94.73	19.32	<AL	24.61	1.00	0.961	25.57	6/25/99 14:44	-130.00
40	-0.206	5.28	<MDA	17.72	87.32	18.59	<AL	24.61	1.00	-0.039	23.57	6/25/99 14:45	-130.00
41	-0.206	5.28	<MDA	17.72	65.09	16.19	<AL	24.61	1.00	-0.039	17.57	6/25/99 14:46	-130.00
42	5.074	5.28	<AL	17.72	57.68	15.31	<AL	24.61	1.00	0.961	15.57	6/25/99 14:47	-130.00
43	-0.206	5.28	<MDA	17.72	39.16	12.85	<AL	24.61	1.00	-0.039	10.57	6/25/99 14:48	-130.00
44	-0.206	5.28	<MDA	17.72	87.32	18.59	<AL	24.61	1.00	-0.039	23.57	6/25/99 14:50	-130.00
45	5.074	5.28	<AL	17.72	691.19	52.22	>AL	24.61	1.00	0.961	186.57	6/25/99 14:51	-130.00
46	-0.206	5.28	<MDA	17.72	198.46	27.70	At AL	24.61	1.00	-0.039	53.57	6/25/99 14:52	-130.00
47	-0.206	5.28	<MDA	17.72	228.10	29.68	At AL	24.61	1.00	-0.039	61.57	6/25/99 14:53	-130.00
48	-0.206	5.28	<MDA	17.72	2.11	5.24	<MDA	24.61	1.00	-0.039	0.57	6/25/99 14:54	-130.00
49	-0.206	5.28	<MDA	17.72	2.11	5.24	<MDA	24.61	1.00	-0.039	0.57	6/25/99 14:55	-130.00
50	-0.206	5.28	<MDA	17.72	46.57	13.89	<AL	24.61	1.00	-0.039	12.57	6/25/99 14:56	-130.00

Reviewed 6/25/99 KL

LB5100-W Low Background Counting System – Smear Analysis # 99-124

42212 CD 10/10/99

Date: 6/25/99

Counting Unit id: 1

Data file name: C:\LBXL\UNIT1\SME00170.XLD

Batch Ended: 6/25/99 15:17

Crosstalk Correction: Not Applied

Alpha activity action level (DPM): 20.00

Beta activity action level (DPM): 200.00

Certainty level for MDA and flags: 95.00%

High Voltage Setting: 1327.5

Application Revision: 2.1.4

Application Version: Standard

Alpha efficiency log file: PU239AB

Alpha Efficiency: 18.94%

Alpha to Beta Crosstalk: 6.46%

Alpha Background (CPM): 0.039

Alpha Correction Factor: 1.000

Beta efficiency log file: TC99AB

Beta Efficiency: 26.99%

Beta into Alpha Crosstalk: 0.20%

Beta Background (CPM): 1.43

Beta Correction Factor: 1.000

Batch ID: BGRR FANHOUSE SUPPORY BEAMS

	Alpha Activity				Beta Activity								
Carrier	DPM	1σ	flags	MDA	DPM	1σ	flags	MDA	Count time (min)	Alpha CPM	Beta CPM	Completion Date - Time	Gamma DPM
51	-0.206	5.28	<MDA	17.72	2.11	5.24	<MDA	24.61	1.00	-0.039	0.57	6/25/99 14:58	-130.00
52	-0.206	5.28	<MDA	17.72	13.23	8.29	<AL	24.61	1.00	-0.039	3.57	6/25/99 14:59	-130.00
53	-0.206	5.28	<MDA	17.72	28.04	11.13	<AL	24.61	1.00	-0.039	7.57	6/25/99 15:00	-130.00
54	5.074	5.28	<AL	17.72	13.23	8.29	<AL	24.61	1.00	0.961	3.57	6/25/99 15:01	-130.00
55	-0.206	5.28	<MDA	17.72	13.23	8.29	<AL	24.61	1.00	-0.039	3.57	6/25/99 15:02	-130.00
56	5.074	5.28	<AL	17.72	61.39	15.76	<AL	24.61	1.00	0.961	16.57	6/25/99 15:03	-130.00
57	-0.206	5.28	<MDA	17.72	102.14	20.03	<AL	24.61	1.00	-0.039	27.57	6/25/99 15:05	-130.00
58	-0.206	5.28	<MDA	17.72	-1.59	3.71	<MDA	24.61	1.00	-0.039	-0.43	6/25/99 15:06	-130.00
59	-0.206	5.28	<MDA	17.72	5.82	6.42	<MDA	24.61	1.00	-0.039	1.57	6/25/99 15:07	-130.00
60	-0.206	5.28	<MDA	17.72	24.34	10.49	<AL	24.61	1.00	-0.039	6.57	6/25/99 15:08	-130.00
61	-0.206	5.28	<MDA	17.72	124.37	22.03	<AL	24.61	1.00	-0.039	33.57	6/25/99 15:09	-130.00
62	-0.206	5.28	<MDA	17.72	68.80	16.61	<AL	24.61	1.00	-0.039	18.57	6/25/99 15:10	-130.00
63	-0.206	5.28	<MDA	17.72	139.19	23.27	<AL	24.61	1.00	-0.039	37.57	6/25/99 15:11	-130.00
64	5.074	5.28	<AL	17.72	94.73	19.32	<AL	24.61	1.00	0.961	25.57	6/25/99 15:13	-130.00
65	-0.206	5.28	<MDA	17.72	154.01	24.45	<AL	24.61	1.00	-0.039	41.57	6/25/99 15:14	-130.00
66	-0.206	5.28	<MDA	17.72	31.75	11.73	<AL	24.61	1.00	-0.039	8.57	6/25/99 15:15	-130.00
67	-0.206	5.28	<MDA	17.72	46.57	13.89	<AL	24.61	1.00	-0.039	12.57	6/25/99 15:16	-130.00
68	-0.206	5.28	<MDA	17.72	9.52	7.41	<AL	24.61	1.00	-0.039	2.57	6/25/99 15:17	-130.00

Reviewed 6/25/99 KL

RDM 7/2/99

BNL RADIOLOGICAL SURVEY FORM

REASON FOR SURVEY: O ROUTINE ☒ SPECIAL

BLDG #: 704 LOCATION: Emergency Fan Room DATE/TIME: 7-13-99 / 1430 RWP #: 99-0101-3

INSTRUMENTS, MODEL / SERIAL #: Ludlum M-19 # 60002 cd 3-26-00 / Ludlum 3 # 50545 cd 2-8-00
RO-20 # 2784 cd 1-6-00 LB5100 # 42212 CD 10/10/94

DOSE RATES (HIGHEST) mR/hr unless noted		AIRBORNE CONTAMINATION		
		TIME	uCi/cc	% DAC
CONTACT	9			
GENERAL AREA	3	N/A	N/A	N/A

LEGEND: O SMEAR SURVEY LOCATION O MASSLINN SURVEY LOCATION

XXX Y / ZZZ — XXX - CONTACT READING; ZZZ - READING @ 30 Cm; Y - RADIATION TYPE

99-134

SMEAR SURVEY RESULTS (DPM/100 cm²)	³H	B-γ	α	MASSLINN SURVEY RESULTS (DPM/LAS)
1.				1.
2.				2.
3. See				3.
4.				4. N/A
5.				5.
6.				6.
7.				7.
8.				8.
9.				9.
10.				10.
11.				11. N/A
12. attached				12.
13.				13.
14.				14.
15.				
16.				
17.				
18. See				
19.				
20.				
21.				
22.				
23.				
24.				
25.				
26. attached				
27.				
28.				

BROOKHAVEN GRAPHITE RESEARCH REACTOR CHARACTERIZATION SURVEY MAP

Note: Smear # 14 - 12K dpm/100cm²
17 - 15K dpm/100cm²
Both Smears Sent to Analytical
Smears not analyzed on tenelec. See lab Printout RON

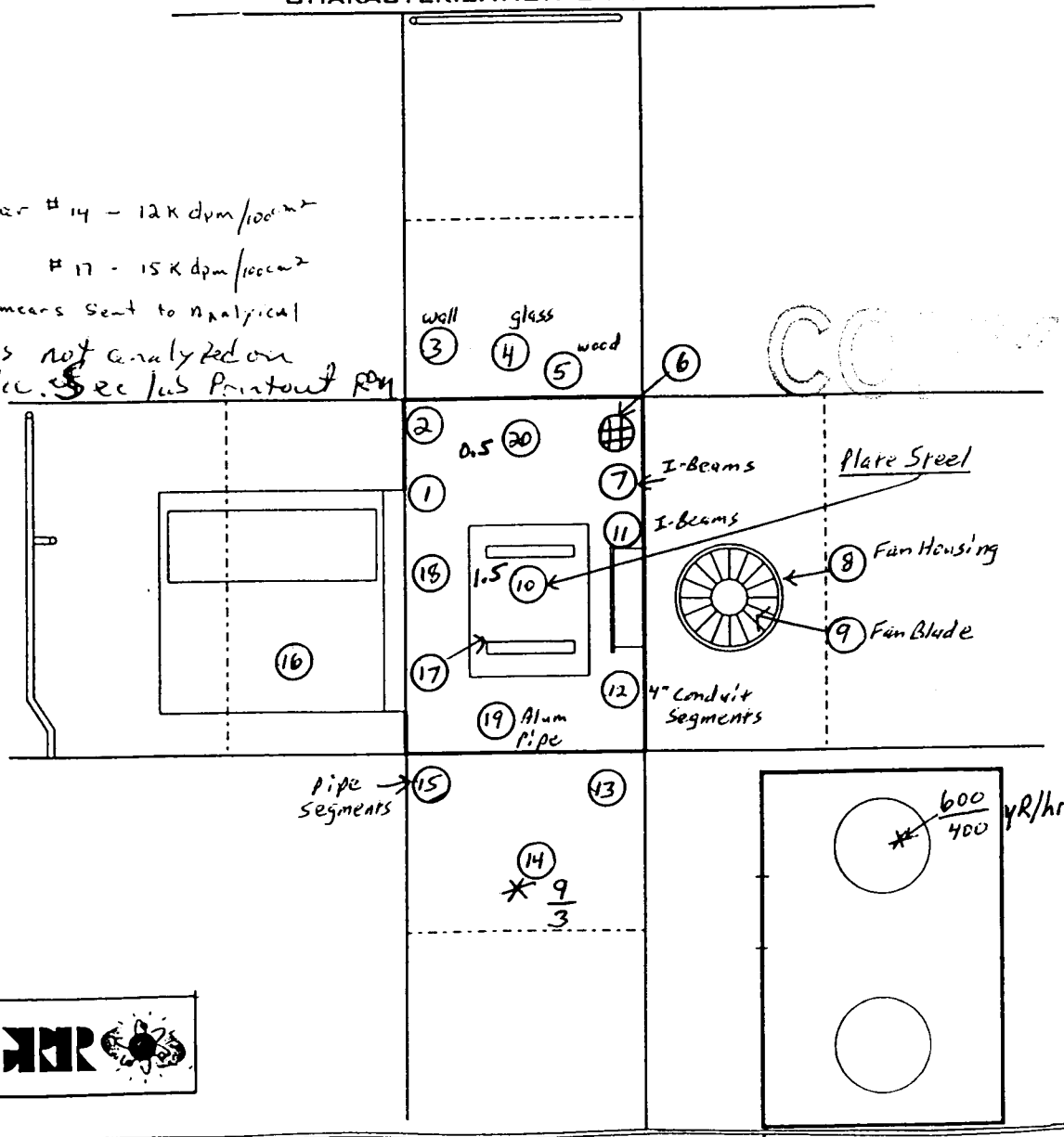

SURVEYED BY: Wm H Maldrum 7-13-99 Ken Kopf Signature/date REVIEWED BY: R.C. Mulbury 7/19/99 Signature/date

BNL RADIOLOGICAL SURVEY FORM

REASON FOR SURVEY ☐ ROUTINE ☐ SPECIAL

BLDG #: 704 LOCATION: Primary Fan Room #4 DATE/TIME: 2-12-00 1000 RWP #: 00-[illegible]

INSTRUMENTS. MODEL / SERIAL #: MODEL #3 50545 9-8-00

DOSE RATES (HIGHEST)		AIRBORNE CONTAMINATION		
CONTACT	NA	TIME	uCi/cc	%DAC
GENERAL AREA	NA	NA	NA	NA

LEGEND: O SMEAR SURVEY LOCATION ☐ MASSLINN SURVEY LOCATIO

XXX Y / ZZZ — XXX = CONTACT READING; ZZZ = READING @ 30 Cm; Y = RADIATION TYPE

SMEAR SURVEY RESULTS (DPM/100 cm²) ³H B-γ α

1. NA	8. NA	15. NA	22. NA
2.	9.	16.	23.
3.	10.	17.	24.
4.	11.	18.	25.
5.	12.	19.	26.
6.	13.	20.	27.
7.	14.	21.	28.

MASSLINN SURVEY RESULTS (DP

1. NA	8. NA
2.	9.
3.	10.
4.	11.
5.	12.
6.	13.
7.	14.

DIRECT FRISK PRIMARY FAN ROOM #4
SURVEY for Down Posting area

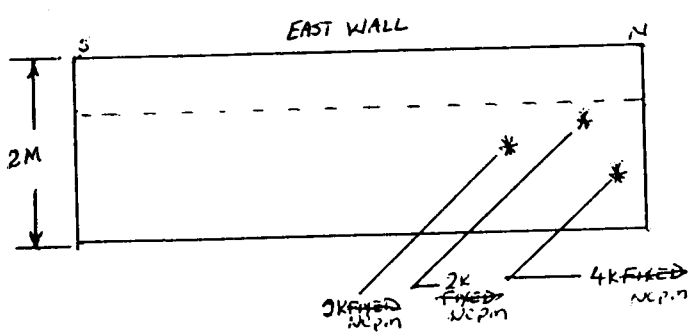

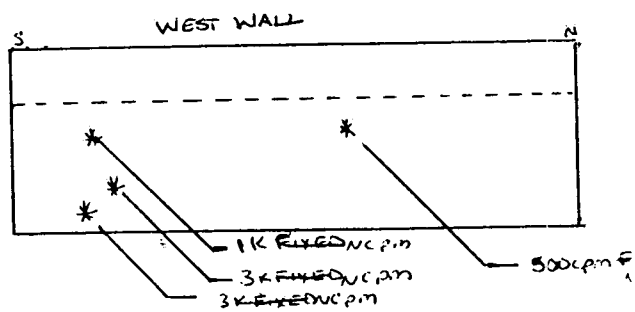

NOTE: NO DETECTABLE ON FRISK ON NORTH AND SOUTH WALL

*BACKGROUND: 100 CPM

SURVEYED BY: [signature] 2-12-00 Signature/date

REVIEWED BY: [signature] Signature/date 2/17/00

File Co

BNL RADIOLOGICAL SURVEY FORM

REASON FOR SURVEY ☐ ROUTINE ☒ SPECIAL

BLDG #: 704 LOCATION: Primary Fan Room #4 DATE/TIME: 2-12-00 1500 RWP #: 00-BLRR-04

INSTRUMENTS, MODEL / SERIAL #: Model #3 50545 9-8-00 / LB-5100 092286 2-11-01

DOSE RATES (HIGHEST)		AIRBORNE CONTAMINATION		
CONTACT	NA	TIME	uCi/cc	%DAC
GENERAL AREA	NA	NA	NA	NA

LEGEND: O SMEAR SURVEY LOCATION ☐ MASSLINN SURVEY LOCATION

XXX Y / ZZZ — XXX = CONTACT READING; ZZZ = READING @ 30 Cm; Y = RADIATION TYPE

SMEAR SURVEY RESULTS (DPM/100 cm²) ³H (B-γ) (α)

1. SEE ATTACHED		8. SEE ATTACHED		15. SEE ATTACHED		22. SEE ATTACHED	
2.		9.		16.		23.	
3.		10.		17.		24.	
4.		11.		18.		25.	
5.		12.		19.		26.	
6.		13.		20.		27.	
7.		14.		21.		28.	

MASSLINN SURVEY RESULTS (DPM/LAS)

1. NA		8. NA	
2.		9.	
3.		10.	
4.		11.	
5.		12.	
6.		13.	
7.		14.	

FAN Room #4

Post Decon Survey, ~~(PEDASTAL)~~ Floor

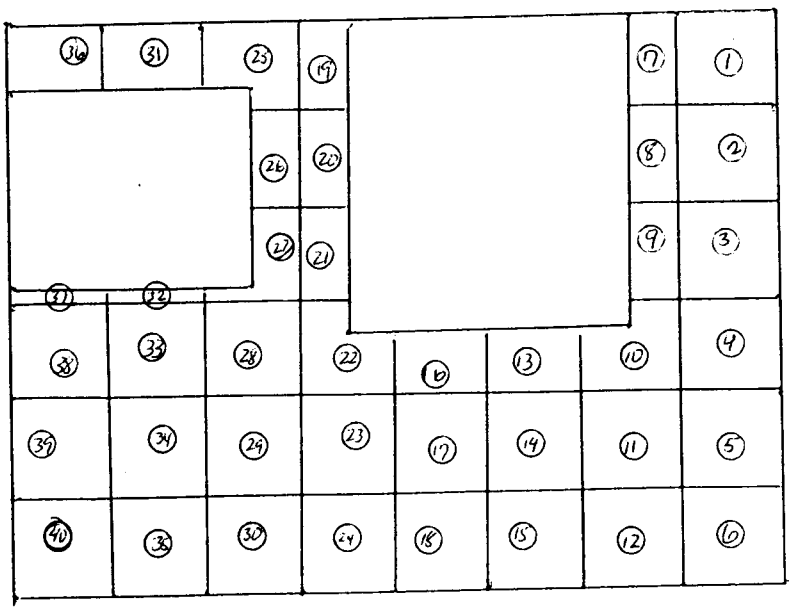

SURVEYED BY: [signature] 2-12-00 Signature/date

REVIEWED BY: [signature] 2/16/00 Signature/date

Form FS-1000-1 FS-SOP-1000 rev 1 attch 8.2 page 11 File Code: HP31

Activity Report

FAN #4 FLOOR

Batch Name:	28	**Acquisition Date:**	2/14/00
Batch ID:	Wipes Sample Counts - 20000214151514	**Acquisition Time: (minutes)**	1.0
Group:	E		
Device:	LASP	**Operating Voltage: (volts)**	1,290.0
Selected Geometry:	1/8" Stainless Steel		

Efficiency Factors

Alpha Efficiency: (%)	0.31	±	0.00	**Beta Efficiency: (%)**	0.19	±	0.00

Sample ID	Quantity	Alpha (DPM)	2σ	Alpha MDA (DPM)	Beta Activity (DPM)	2σ	Beta MDA (DPM)
20000214151448-E~~61~~ 1	0.00	2.47	6.52	13.02	744.27	125.01	33.93
20000214154721-E~~62~~ 2	0.00	2.62	6.52	13.02	355.68	86.81	33.93
20000214154831-E~~63~~ 3	0.00	-0.53	0.56	13.02	112.48	49.78	33.93
20000214154951-E~~64~~ 4	0.00	2.68	6.52	13.02	210.60	67.24	33.93
20000214155101-E~~65~~ 5	0.00	-0.54	0.56	13.02	128.02	52.92	33.93
20000214155222-E~~66~~ 6	0.00	-0.51	0.56	13.02	50.31	34.47	33.93
20000214155331-E~~67~~ 7	0.00	9.04	11.26	13.02	531.20	105.83	33.93
20000214155452-E~~68~~ 8	0.00	-0.63	0.56	13.02	356.00	86.80	33.93
20000214155602-E~~69~~ 9	0.00	-0.54	0.56	13.02	148.75	56.84	33.93
20000214155722-E~~70~~ 10	0.00	-0.53	0.56	13.02	107.30	48.69	33.93
20000214155832-E~~71~~ 11	0.00	2.72	6.52	13.02	112.16	49.78	33.93
20000214155953-E~~72~~ 12	0.00	-0.51	0.56	13.02	55.49	36.00	33.93
20000214160103-E~~73~~ 13	0.00	2.72	6.52	13.02	96.62	46.43	33.93
20000214160213-E~~74~~ 14	0.00	-0.50	0.56	13.02	29.58	27.54	33.93
20000214160333-E~~75~~ 15	0.00	-0.49	0.56	13.02	19.22	23.32	33.93
20000214160443-E~~76~~ 16	0.00	-0.55	0.56	13.02	153.93	57.77	33.93
20000214160603-E~~77~~ 17	0.00	-0.50	0.56	13.02	29.58	27.54	33.93
20000214160713-E~~78~~ 18	0.00	-0.49	0.56	13.02	14.04	20.89	33.93
20000214160833-E~~79~~ 19	0.00	-0.50	0.56	13.02	45.12	32.88	33.93
20000214160943-E~~80~~ 20	0.00	-0.50	0.56	13.02	24.40	25.52	33.93
20000214161104-E~~81~~ 21	0.00	2.73	6.52	13.02	70.71	40.23	33.93
20000214161214-E~~82~~ 22	0.00	-0.50	0.56	13.02	29.58	27.54	33.93
20000214161334-E~~83~~ 23	0.00	-0.50	0.56	13.02	24.40	25.52	33.93
20000214161444-E~~84~~ 24	0.00	-0.50	0.56	13.02	45.12	32.88	33.93
20000214161604-E~~85~~ 25	0.00	2.72	6.52	13.02	91.44	45.26	33.93
20000214161714-E~~86~~ 26	0.00	-0.56	0.56	13.02	179.84	62.25	33.93
20000214161835-E~~87~~ 27	0.00	-0.53	0.56	13.02	117.66	50.85	33.93
20000214161944-E~~88~~ 28	0.00	-0.51	0.56	13.02	60.67	37.46	33.93
20000214162105-E~~89~~ 29	0.00	2.74	6.52	13.02	39.62	31.21	33.93
20000214162214-E~~90~~ 30	0.00	2.70	6.52	13.02	143.25	55.89	33.93
20000214162334-E~~91~~ 31	0.00	-0.56	0.56	13.02	179.84	62.25	33.93
20000214162445-E~~92~~ 32	0.00	-0.50	0.56	13.02	45.12	32.88	33.93
20000214162605-E~~93~~ 33	0.00	-0.50	0.56	13.02	45.12	32.88	33.93
20000214162715-E~~94~~ 34	0.00	-0.49	0.56	13.02	-1.51	10.69	33.93
20000214162835-E~~96~~ 35	0.00	-0.50	0.56	13.02	29.58	27.54	33.93
20000214162945-E~~97~~ 36	0.00	-0.53	0.56	13.02	107.30	48.69	33.93

Activity Report

Efficiency Factors

Alpha Efficiency: (%)	0.31	±	0.00	**Beta Efficiency: (%)**	0.19	±	0.00

Sample ID	Quantity	Alpha (DPM)	2σ	Alpha MDA (DPM)	Beta Activity (DPM)	2σ	Beta MDA (DPM)
20000214163105-E98 37	0.00	-0.54	0.56	13.02	143.57	55.88	33.93
20000214163216-E29 39	0.00	2.73	6.52	13.02	75.89	41.54	33.93
20000214163336-E30 35	0.00	-0.49	0.56	13.02	14.04	20.89	33.93
20000214163446-E31 40	0.00	2.75	6.52	13.02	24.08	25.53	33.93

Reviewed by:

BNL RADIOLOGICAL SURVEY FORM

REASON FOR SURVEY ☐ ROUTINE ☒ SPECIAL

BLDG #: 704 LOCATION: Primary Fan Room #4 DATE/TIME: 2-12-01 1100 RWP #: 00BGRR-04

INSTRUMENTS, MODEL / SERIAL #: LB-5100 092286 2-11-01

DOSE RATES (HIGHEST)		AIRBORNE CONTAMINATION		
CONTACT	NA	TIME	uCi/cc	%DAC
GENERAL AREA	NA			

LEGEND: O SMEAR SURVEY LOCATION ☐ MASSLINN SURVEY LOCATION

XXX Y / ZZZ — XXX - CONTACT READING; ZZZ - READING @ 30 Cm; Y - RADIATION TYPE

SMEAR SURVEY RESULTS (DPM/100 cm²) ³H B-γ α

	Bγ	α		Bγ	α		Bγ	α		Bγ	α
1.	<100	<MDA	8.	<100	<MDA	15.	<100	<MDA	22.	<100	<MDA
2.			9.			16.			23.	112	
3.			10.			17.			24.	<100	
4.			11.	251		18.			25.		
5.			12.	<100		19.			26.		
6.			13.			20.			27.		
7.			14.			21.			28.		

MASSLINN SURVEY RESULTS (DPM/LAS)

1.		8.	
2.		9.	
3.		10.	
4.		11.	
5.		12.	
6.		13.	
7.		14.	

PRIMARY FAN ROOM # 4
WALL SMEAR SURVEY

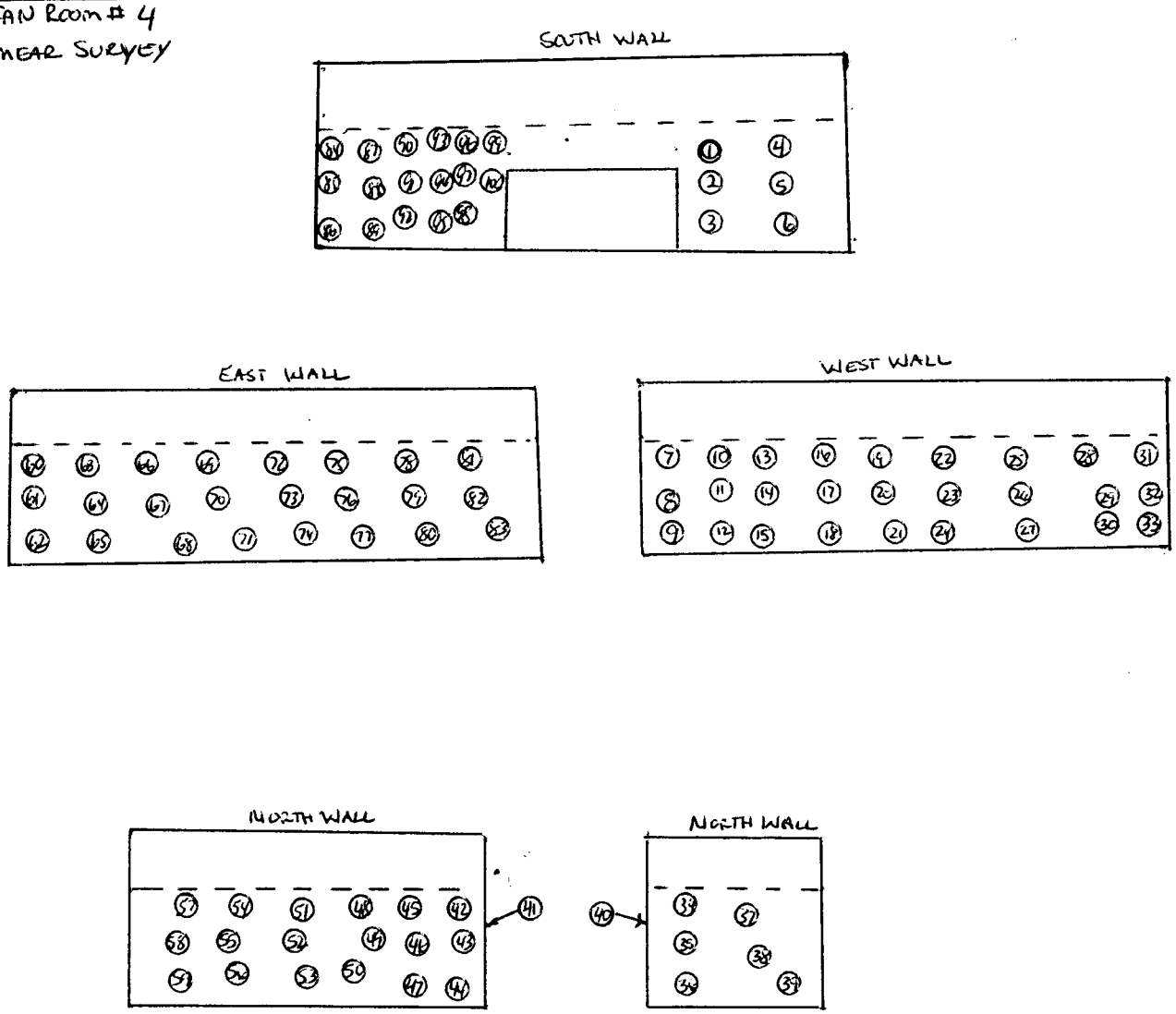

SURVEYED BY: [signature] 2-12-00 Signature/date

REVIEWED BY: [signature] Signature/date

C. YOUNG 2/16/00

Form FS-1000.1 FS-SOP-1000 rev 1, attch 8.2, page 11 File Code: HP31

BNL RADIOLOGICAL SURVEY FORM

REASON FOR SURVEY

BLDG #: 704 LOCATION: Primary Fan Room #4 DATE/TIME: 2/12/00 1100 ☐ ROUTINE ☐ SPECIAL RWP #: 00BGRA-04

INSTRUMENTS, MODEL / SERIAL #: LB-5100 092206 2-11-00

CONTAMINATION CONTINUATION SHEET

LEGEND: O SMEAR SURVEY LOCATION ☐ MASSLINN SURVEY LOCATION

SMEAR SURVEY RESULTS (DPM/100 cm²) ³H B-γ α

29. <100	<MDA	52. <100	<MDA	75. <100	<MDA
30.		53.		76.	
31.		54.		77.	
32.		55.		78.	
33.		56.		79.	
34.		57.		80.	
35.		58.		81.	
36.		59.		82.	
37.		60.		83.	
38.		61.		84.	
39.		62.		85.	
40.		63.		86.	
41.		64.		87.	
42.		65.		88.	
43.		66.		89.	
44.		67.		90.	
45. <100		68.		91.	
46.		69.		92.	
47.		70.		93.	
48.		71.		94.	
49.		72.		95.	
50.		73.		96.	
51.		74.		97.	

SURVEYED BY: _____ Signature/date

REVIEWED BY: _____ Signature/date

BLDG #: 704 LOCATION: Primary Fan Room #4 DATE/TIME: 2-12-00 1300 ☐ ROUTINE ☒ SPECIAL RWP #: [illegible]

INSTRUMENTS. MODEL / SERIAL #: 185100 092286 2 11-01

DOSE RATES (HIGHEST)		AIRBORNE CONTAMINATION		
CONTACT	NA	TIME	uCi/cc	%DAC
GENERAL AREA	NA	NA	NA	NA

LEGEND: O SMEAR SURVEY LOCATION ☐ MASSLINN SURVEY LOCATION

XXX Y / ZZZ — XXX = CONTACT READING; ZZZ = READING @ 30 Cm; Y = RADIATION TYPE

SMEAR SURVEY RESULTS (DPM/100 cm²) ³H (B-γ)

1. SEE ATTACHED		8.		15.		22.	
2.		9.		16.		23.	
3.		10.		17.		24.	
4.		11.	NA	18.	NA	25.	NA
5.		12.		19.		26.	
6.		13.		20.		27.	
7.	NA	14.		21.		28.	

MASSLINN SURVEY RESULTS (DPM

1.		8.	
2.		9.	
3.		10.	
4.	NA	11.	NA
5.		12.	
6.		13.	
7.		14.	

POST DECON SMEAR SURVEY FAN #4 PEDESTAL

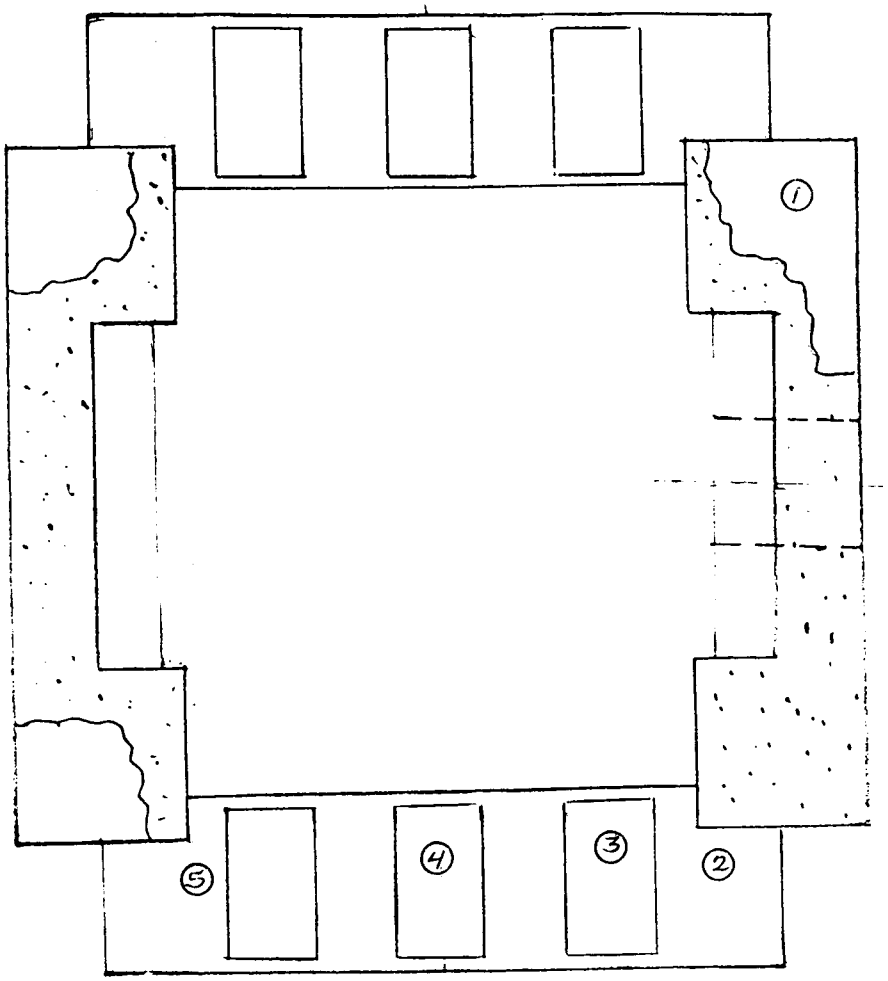

SURVEYED BY: [signature] 2-12-00 Signature/date

REVIEWED BY: [signature] 2-16-00 Signature/date

Form FS-1000.1 FS-SOP-1000, rev 1, attch 8.2, page 11 File Code

Activity Report

FAN #4 PEDASTAL POST DECON

Batch Name:	27	**Acquisition Date:**	2/14/00
Batch ID:	Wipes Sample Counts - 200002141508	**Acquisition Time: (minutes)**	1.0
Group:	D		
Device:	LASP	**Operating Voltage: (volts)**	1,290.0
Selected Geometry:	1/8" Stainless Steel		

Efficiency Factors

Alpha Efficiency: (%)	0.31	±	0.00	**Beta Efficiency: (%)**	0.19	±	0.00

Sample ID	Quantity	Alpha (DPM)	2σ	Alpha MDA (DPM)	Beta Activity (DPM)	2σ	Beta MDA (DPM)
20000214150855-D51	0.00	24.81	18.37	13.02	1,721.29	190.10	33.93
20000214153448-D52	0.00	-0.55	0.56	13.02	159.11	58.70	33.93
20000214153558-D53	0.00	5.93	9.20	13.02	184.38	63.12	33.93
20000214153718-D54	0.00	-0.53	0.56	13.02	107.30	48.69	33.93
20000214153828-D55	0.00	-0.55	0.56	13.02	164.29	59.61	33.93
[redacted]	[redacted]	[redacted]	[redacted]	[redacted]	[redacted]	[redacted]	[redacted]
[redacted]	[redacted]	[redacted]	[redacted]	[redacted]	[redacted]	[redacted]	[redacted]
[redacted]	[redacted]	[redacted]	[redacted]	[redacted]	[redacted]	[redacted]	[redacted]
[redacted]	[redacted]	[redacted]	[redacted]	[redacted]	[redacted]	[redacted]	[redacted]
[redacted]	[redacted]	[redacted]	[redacted]	[redacted]	[redacted]	[redacted]	[redacted]

NOT USED

Reviewed by:

BNL RADIOLOGICAL SURVEY FORM

REASON FOR SURVEY: ☐ ROUTINE ☒ SPECIAL RWP # [illegible]

BLDG #: 704 LOCATION: Primary Fan Room #4 DATE/TIME: 2-14-00 1400

INSTRUMENTS, MODEL / SERIAL #: MVDULE#3 50545 9-8-00 / LB5100 092286 2-11-00

DOSE RATES (HIGHEST)		AIRBORNE CONTAMINATION		
		TIME	uCi/cc	%DAC
CONTACT	NA			
GENERAL AREA	NA	NA	NA	NA

LEGEND: O SMEAR SURVEY LOCATION; O MASSLINN SURVEY LOCATIO

XXX Y / ZZZ — XXX = CONTACT READING; ZZZ = READING @ 30 Cm; Y = RADIATION TYPE

SMEAR SURVEY RESULTS (DPM/100 cm²) ³H β-γ α

1. SEE ATTACHED		8. SEE ATTACHED		15. SEE ATTACHED		22. NA	
2.		9.		16.		23.	
3.		10.		17.		24.	
4.		11.		18.		25.	
5.		12.		19.		26.	
6.		13.		20.		27.	
7.		14.		21. NA		28.	

MASSLINN SURVEY RESULTS (DP

1. <1K		8.	
2. <1K		9.	
3. <1K		10.	
4. <1K		11.	
5. <1K		12.	
6. <1K		13.	
7.		14.	

11 DUCT
12 REAR of upper VIV Body
13 WALL SIDE FRAME
14 REAR DUCT COLLAR
18 REAR upper FRAME support

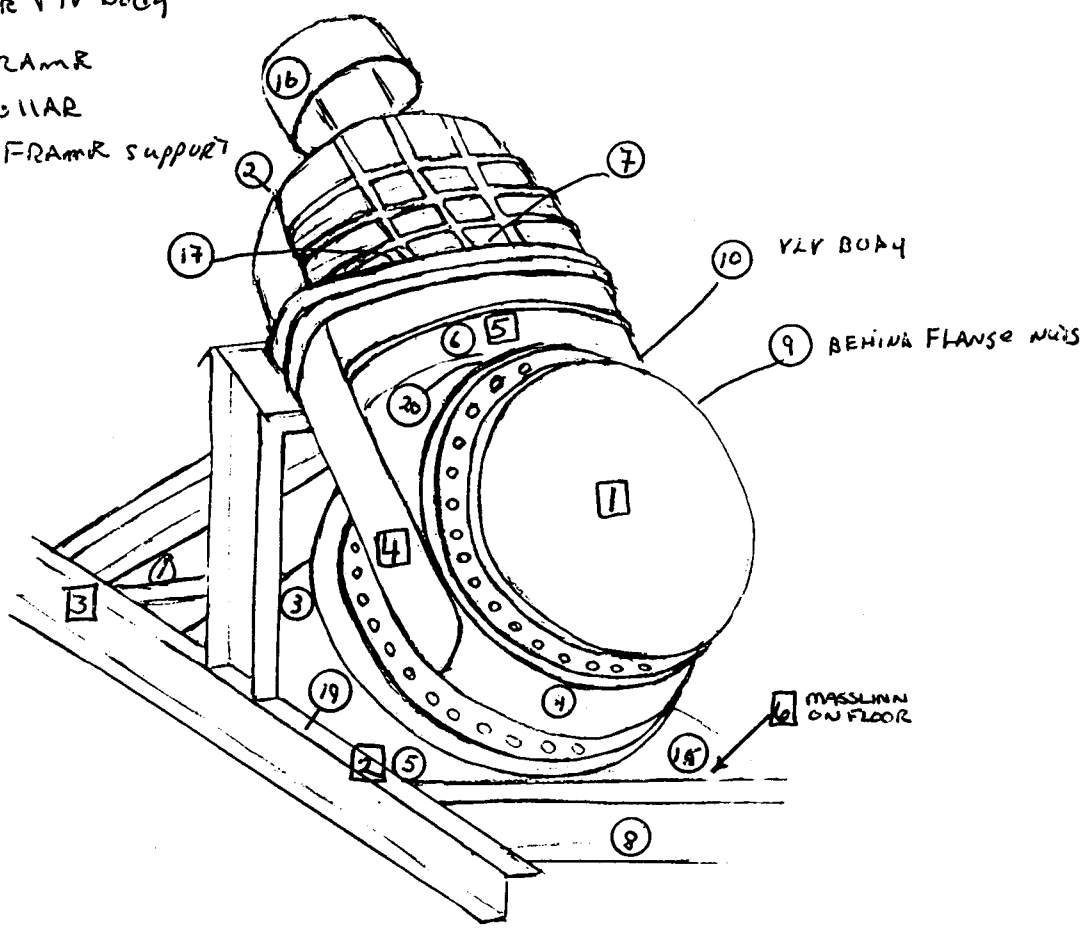

SURVEYED BY: [illegible] 2-14-00 Signature/date REVIEWED BY: [illegible] Signature/date 2/14/00

Form FS-1000.1 [illegible] 2-14-00 FS-SOP-1000, rev 1, attch 8.2, page 11 File Co

Activity Report

FAN #4 DISCHARGE VALVE

Batch Name:	35	**Acquisition Date:**	2/15/00
Batch ID:	Wipes Sample Counts - 200002150728	**Acquisition Time: (minutes)**	1.0
Group:	A		
Device:	LASP	**Operating Voltage: (volts)**	1,290.0
Selected Geometry:	1/8" Stainless Steel		

Efficiency Factors

Alpha Efficiency: (%)	0.31	±	0.00	**Beta Efficiency: (%)**	0.19	±	0.00

Sample ID	Quantity	Alpha (DPM)	2σ	Alpha MDA (DPM)	Beta Activity (DPM)	2σ	Beta MDA (DPM)
20000215072827-A1	0.00	-0.49	0.56	13.02	19.22	23.32	33.93
20000215072958-A2	0.00	-0.50	0.56	13.02	45.12	32.88	33.93
20000215073118-A3	0.00	-0.51	0.56	13.02	50.31	34.47	33.93
20000215073228-A4	0.00	-0.49	0.56	13.02	8.86	18.14	33.93
20000215073348-A5	0.00	-0.50	0.56	13.02	29.58	27.54	33.93
20000215073458-A6	0.00	-0.53	0.56	13.02	102.12	47.57	33.93
20000215073618-A7	0.00	-0.51	0.56	13.02	55.49	36.00	33.93
20000215073728-A8	0.00	2.76	6.52	13.02	8.54	18.15	33.93
20000215073849-A9	0.00	-0.50	0.56	13.02	34.76	29.43	33.93
20000215073959-A10	0.00	2.75	6.52	13.02	18.90	23.33	33.93
20000215074119-A11	0.00	-0.49	0.56	13.02	14.04	20.89	33.93
20000215074229-A12	0.00	5.99	9.20	13.02	39.31	31.21	33.93
20000215074349-A13	0.00	-0.49	0.56	13.02	3.67	14.89	33.93
20000215074459-A14	0.00	2.75	6.52	13.02	34.44	29.44	33.93
20000215074619-A95	0.00	-0.49	0.56	13.02	14.04	20.89	33.93
20000215074729-A16	0.00	-0.49	0.56	13.02	3.67	14.89	33.93
20000215074849-A17	0.00	-0.49	0.56	13.02	19.22	23.32	33.93
20000215074959-A18	0.00	-0.50	0.56	13.02	45.12	32.88	33.93
20000215075120-A19	0.00	-0.50	0.56	13.02	24.40	25.52	33.93
20000215075230-A20	0.00	2.74	6.52	13.02	55.17	36.00	33.93

Reviewed by:

BNL RADIOLOGICAL SURVEY FORM

REASON FOR SURVEY
☐ ROUTINE ☒ SPECIAL RWP #: 0006,0020

BLDG #: 704 LOCATION: Primary Fan Room #4 DATE/TIME: 2-16-00 1500

INSTRUMENTS, MODEL / SERIAL #: Ludlum 177 75655 2-4-01

DOSE RATES (HIGHEST)		AIRBORNE CONTAMINATION		
CONTACT	NA	TIME	uCi/cc	%DAC
GENERAL AREA	NA	NA	NA	NA

LEGEND: O SMEAR SURVEY LOCATION ○ MASSLINN SURVEY LOCATI

XXX Y / ZZZ — XXX - CONTACT READING; ZZZ - READING @ 30 Cm; Y - RADIATION TYPE

SMEAR SURVEY RESULTS (DPM/100 cm²) ³H B-γ α

1.		8.		15.		22.	
2.		9.		16.		23.	
3.		10.		17.		24.	
4.	NA	11.	NA	18.	NA	25.	NA
5.		12.		19.		26.	
6.		13.		20.		27.	
7.		14.		21.		28.	

MASSLINN SURVEY RESULTS (DP

1.		8.	
2.		9.	
3.		10.	
4.	NA	11.	NA
5.		12.	
6.		13.	
7.		14.	

DIRECT FRISK ON DISCHARGE VALVE IN FAN ROOM #4

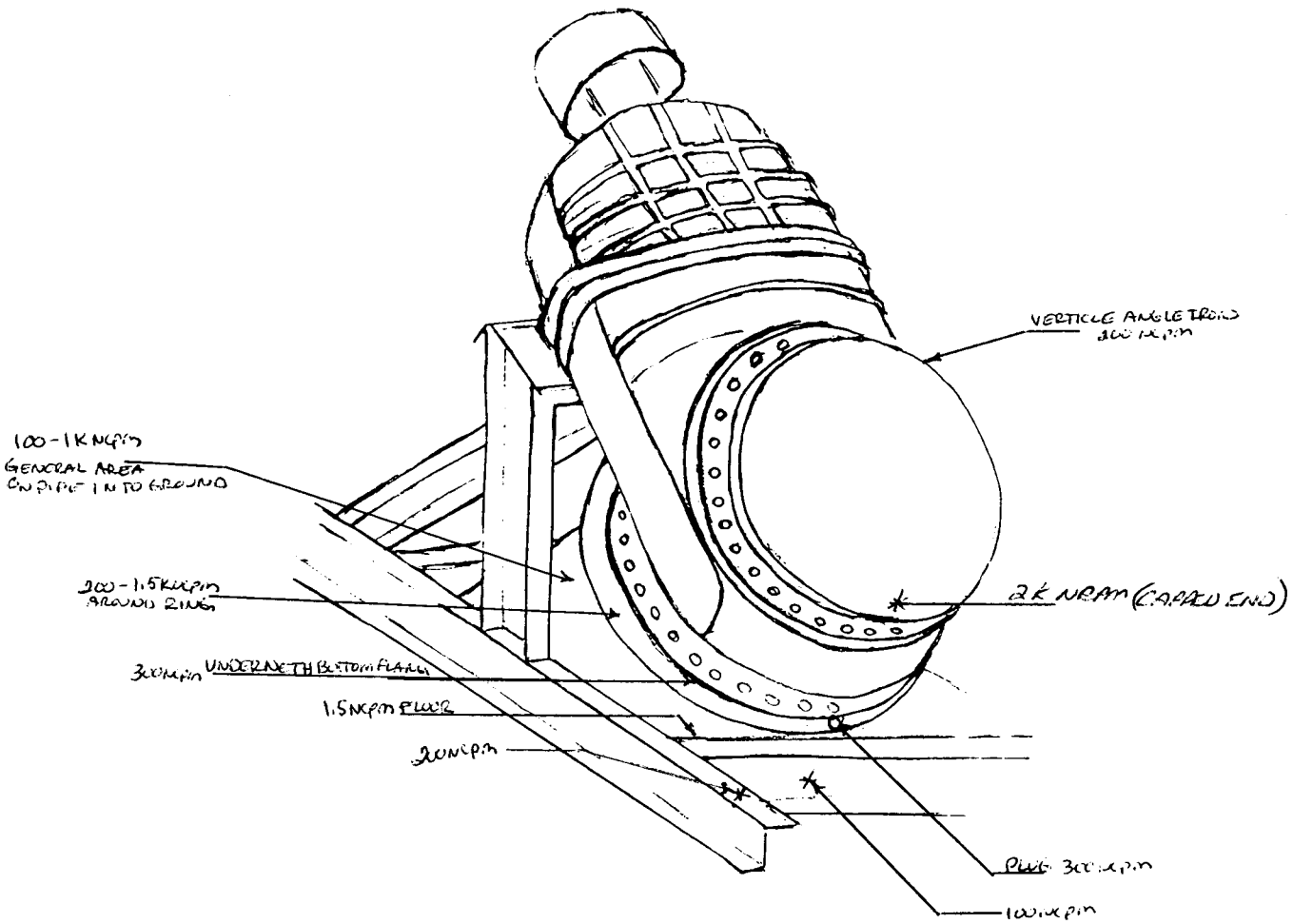

NOTE:
BACKGROUND: 150 CPM

SURVEYED BY: [signature] 2-16-00 Signature/date

REVIEWED BY: [signature] 2/16/00 Signature/date

File C

Form FS-1000.1

FS-SOP-1000 rev 1, attch 8.2, page 11

BLDG #: 704 LOCATION: Primary Fan Room #4 DATE/TIME: 2-16-00 1400 ROUTINE ☒ SPECIAL ☐ RWP #: [illegible]

INSTRUMENTS. MODEL / SERIAL #: Ludlum 177 75655 2-4-01

DOSE RATES (HIGHEST)		AIRBORNE CONTAMINATION		
CONTACT	NA	TIME	uCi/cc	%DAC
GENERAL AREA	NA	NA	NA	NA

LEGEND: O SMEAR SURVEY LOCATION ☐ MASSLINN SURVEY LOCATIO

XXX Y
ZZZ

XXX - CONTACT READING
ZZZ - READING @ 30 Cm

Y - RADIATION TYPE

SMEAR SURVEY RESULTS (DPM/100 cm²) ³H B-γ α

1.	8.	15.	22.
2.	9.	16.	23.
3.	10.	17.	24.
4. NA	11. NA	18. NA	25. NA
5.	12.	19.	26.
6.	13.	20.	27.
7.	14.	21.	28.

MASSLINN SURVEY RESULTS (DPM

1.	8.
2.	9.
3.	10.
4. NA	11. NA
5.	12.
6.	13.
7.	14.

DIRECT FRISK ON FLOOR IN PEDALSTAL AND PEDASTAL
FAN ROOM #4

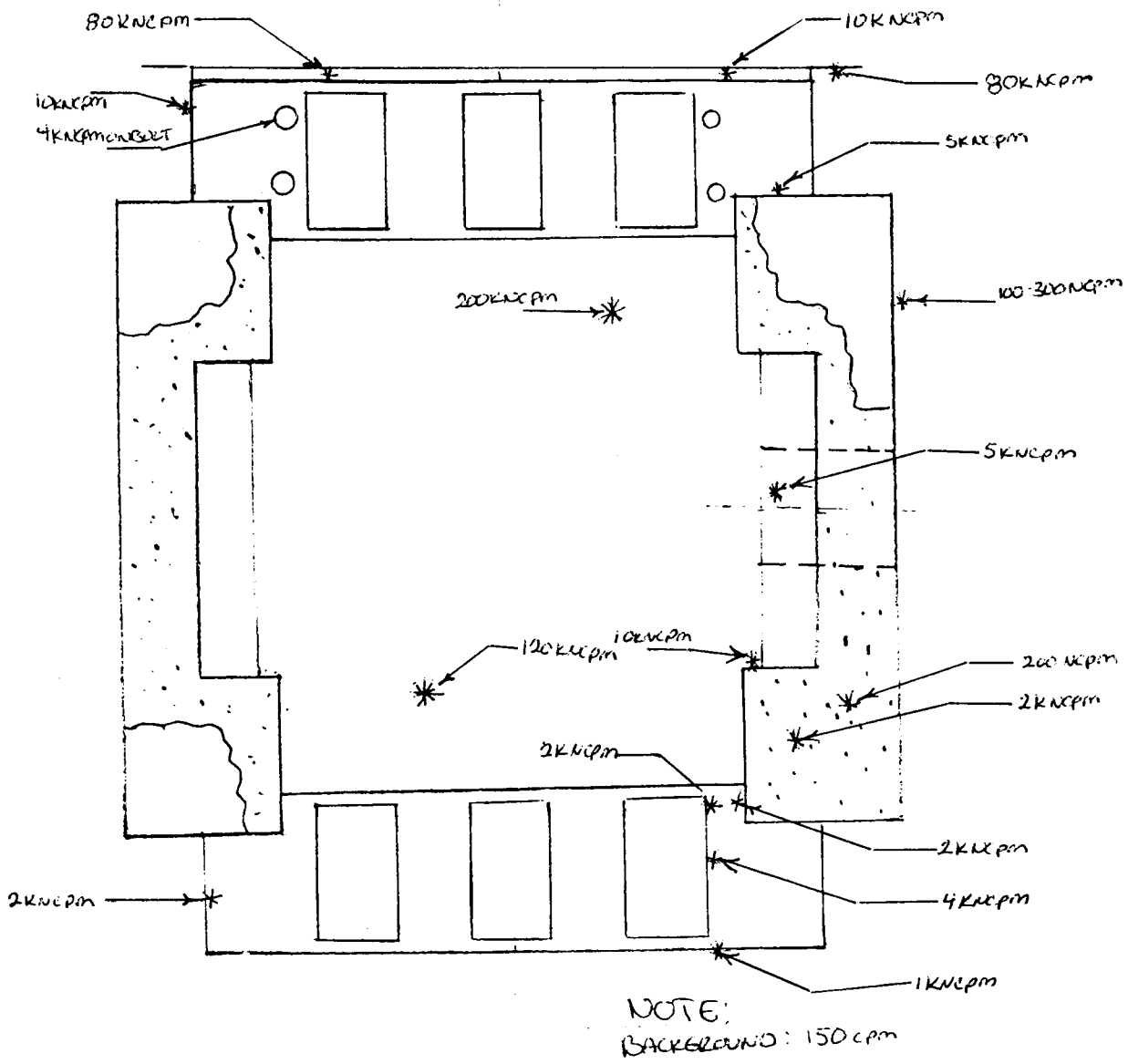

NOTE:
BACKGROUND: 150 cpm

SURVEYED BY: [signature] 2-16-00 Signature/date

REVIEWED BY: [signature] Signature/date 2/16/00

BNL RADIOLOGICAL SURVEY FORM

REASON FOR SURVEY ☐ ROUTINE ☒ SPECIAL

BLDG #: 704 LOCATION: Primary Fan Room #4 DATE/TIME: 2-12-00 1500 RWP #: Base 04

INSTRUMENTS, MODEL / SERIAL #: Model #3 50545 - 9-8-00

DOSE RATES (HIGHEST)		AIRBORNE CONTAMINATION		
CONTACT	NA	TIME	uCi/cc	% DAC
GENERAL AREA	NA	NA	NA	NA

LEGEND: O SMEAR SURVEY LOCATION O MASSLINN SURVEY LOCATION

XXX Y / ZZZ — XXX - CONTACT READING; ZZZ - READING @ 30 Cm; Y - RADIATION TYPE

SMEAR SURVEY RESULTS (DPM/100 cm²) ³H (B-γ) (α)

1.		8.		15.		22.	
2.		9.		16.		23.	
3.		10.		17.		24.	
4.	NA	11.	NA	18.	NA	25.	NA
5.		12.		19.		26.	
6.		13.		20.		27.	
7.		14.		21.		28.	

MASSLINN SURVEY RESULTS (DPM/LAS)

1.	<1K	8.	
2.	<1K	9.	
3.	<1K	10.	
4.	<1K	11.	
5.	<1K	12.	
6.	<1K	13.	
7.		14.	

DIRECT FRISK ON FLOOR
FAN ROOM #4

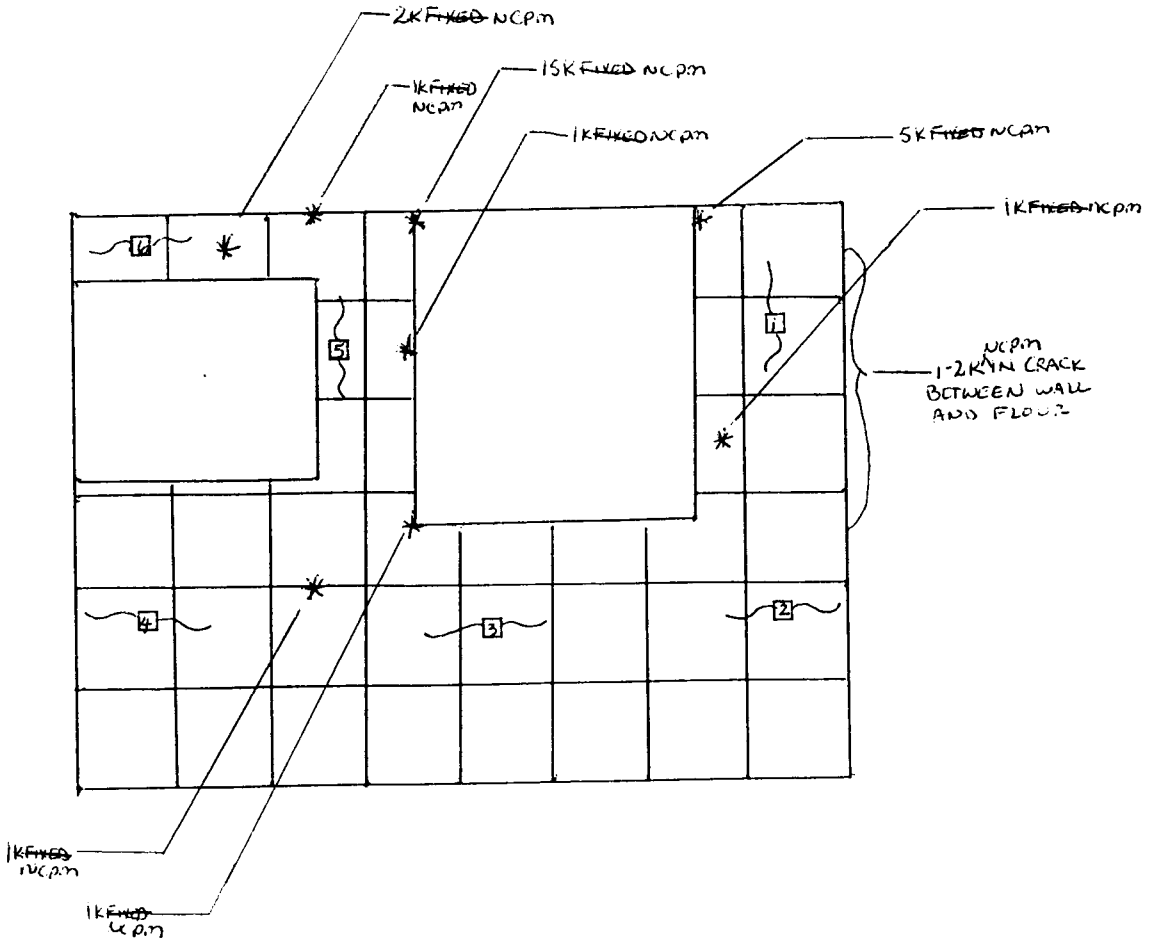

BACKGROUND = 100-150 CPM GENERAL AREA

SURVEYED BY: [signature] 2-12-00 Signature/date

REVIEWED BY: [signature] Signature/date 2/16/00

Form FS-1000.1 FS-SOP-1000, rev 1, attch 8.2, page 11 File Code: HP31

BNL RADIOLOGICAL SURVEY FORM

REASON FOR SURVEY

BLDG #: 704 LOCATION: Primary Fan Room # 4 DATE/TIME: 1/13/00 1400 ROUTINE ☐ SPECIAL ☐ RWP #: 00-B

INSTRUMENTS, MODEL / SERIAL #: LB-5100 092286 2-1900

DOSE RATES (HIGHEST)		AIRBORNE CONTAMINATION		
CONTACT	NA	TIME	uCi/cc	%DAC
GENERAL AREA	NA	NA	NA	NA

LEGEND: O SMEAR SURVEY LOCATION O MASSLINN SURVEY LOCATIO

XXX Y / ZZZ — XXX - CONTACT READING; ZZZ - READING @ 30 Cm; Y - RADIATION TYPE

SMEAR SURVEY RESULTS (DPM/100 cm²) ³H B-γ α				MASSLINN SURVEY RESULTS (DPM	
1. SEE ATTACHED	8. SEE ATTACHED	15. SEE ATTACHED	22. SEE ATTACHED	1. NA	8. NA
2.	9.	16.	23.	2.	9.
3.	10.	17.	24.	3.	10.
4.	11.	18.	25.	4.	11.
5.	12.	19.	26.	5.	12.
6.	13.	20.	27.	6.	13.
7.	14.	21.	28.	7.	14.

BROOKHAVEN GRAPHITE RESEARCH REACTOR CHARACTERIZATION SURVEY MAP

PRE- DECON SURVEY.

SURVEY OF FAN ROOM #4 PRIOR TO REGRESSING ROPES - PRE- DECON.

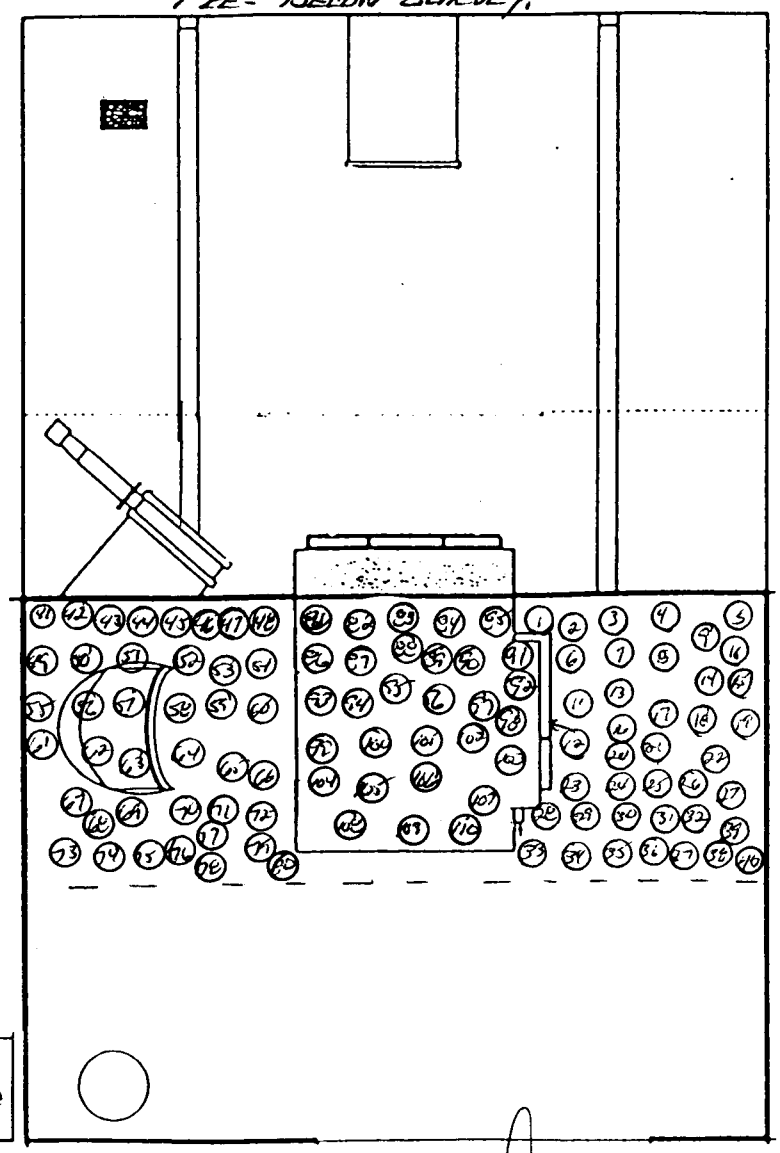

SURVEYED BY: Mark Blanchard Signature/date 2/10/00

REVIEWED BY: Dorian Mergen Signature/date 3/8/2K

Form FS-1000-1 FS-SOP-1000 rev 1, attch 8.2 page 11 File Code: HI

Activity Report

2:55:46PM

FAN#3 DEPOST RIGHT SIDE

Batch Name:	742	**Acquisition Date:**	1/20/00
Batch ID:	Wipe Sample Counrts - 200001201408	**Acquisition Time: (minutes)**	1.0
Group:	A		
Device:	LSAP Unit 1	**Operating Voltage: (volts)**	1,335.0
Selected Geometry:	1/8" Stainless Steel		

Efficiency Factors

Alpha Efficiency: (%)	0.30	±	0.00	**Beta Efficiency: (%)**	0.19	±	0.00

Sample ID	Quantity	Alpha (DPM)	2σ	Alpha MDA (DPM)	Beta Activity (DPM)	2σ	Beta MDA (DPM)
20000120140850-~~A1~~ 41	0.00	-0.01	0.08	8.89	125.24	51.14	14.12
20000120141020-~~A2~~ 42	0.00	0.00	0.01	8.89	10.44	14.76	14.12
20000120141130-~~A3~~ 43	0.00	-0.02	0.10	8.89	161.77	58.13	14.12
20000120141240-~~A4~~ 44	0.00	0.00	0.02	8.89	36.53	27.61	14.12
20000120141350-~~A5~~ 45	0.00	0.00	0.03	8.89	41.75	29.52	14.12
20000120141450-~~A6~~ 46	0.00	0.00	0.03	8.89	46.96	31.31	14.12
20000120141601-~~A7~~ 47	0.00	0.00	0.02	8.89	26.09	23.34	14.12
20000120141711-~~A8~~ 48	0.00	0.00	0.02	8.89	31.31	25.57	14.12
20000120141821-~~A9~~ 49	0.00	0.00	0.03	8.89	46.96	31.31	14.12
20000120141931-~~A10~~ 50	0.00	0.00	0.01	8.89	20.87	20.87	14.12
00120142051-~~A11~~ 51	0.00	-0.01	0.05	8.89	83.49	41.75	14.12
20000120142201-~~A12~~ 52	0.00	0.00	0.02	8.89	31.31	25.57	14.12
20000120142311-~~A13~~ 53	0.00	0.00	0.02	8.89	31.31	25.57	14.12
20000120142411-~~A14~~ 54	0.00	0.00	0.02	8.89	31.31	25.57	14.12
20000120142521-~~A95~~ 55	0.00	0.00	0.03	8.89	41.75	29.52	14.12
20000120142632-~~A16~~ 56	0.00	0.00	0.02	8.89	26.09	23.34	14.12
20000120142742-~~A17~~ 57	0.00	0.00	0.02	8.89	26.09	23.34	14.12
20000120142852-~~A18~~ 58	0.00	-0.01	0.04	8.89	62.62	36.16	14.12
20000120143002-~~A19~~ 59	0.00	0.00	0.01	8.89	15.65	18.08	14.12
20000120143112-~~A20~~ 60	0.00	0.00	0.02	8.89	36.53	27.61	14.12
20000120143222-~~A21~~ 61	0.00	0.00	0.01	8.89	20.87	20.87	14.12
20000120143333-~~A22~~ 62	0.00	0.00	0.03	8.89	46.96	31.31	14.12
20000120143443-~~A23~~ 63	0.00	0.00	0.02	8.89	36.53	27.61	14.12
20000120143553-~~A24~~ 64	0.00	3.29	6.57	8.89	15.63	18.08	14.12
20000120143703-~~A25~~ 65	0.00	0.00	0.02	8.89	26.09	23.34	14.12
20000120143813-~~A26~~ 66	0.00	0.00	0.01	8.89	10.44	14.76	14.12
20000120143923-~~A27~~ 67	0.00	0.00	0.02	8.89	31.31	25.57	14.12
20000120144033-~~A28~~ 68	0.00	3.29	6.57	8.89	10.41	14.76	14.12
20000120144144-~~A29~~ 69	0.00	0.00	0.03	8.89	41.75	29.52	14.12
20000120144254-~~A30~~ 70	0.00	0.00	0.01	8.89	20.87	20.87	14.12
20000120144404-~~A31~~ 71	0.00	0.00	0.02	8.89	31.31	25.57	14.12
20000120144514-~~A32~~ 72	0.00	3.28	6.57	8.89	31.28	25.57	14.12
00120144624-~~A33~~ 73	0.00	0.00	0.02	8.89	36.53	27.61	14.12
20000120144734-~~A34~~ 74	0.00	3.28	6.57	8.89	26.06	23.34	14.12
20000120144844-~~A35~~ 75	0.00	0.00	0.01	8.89	10.44	14.76	14.12
20000120144954-~~A36~~ 76	0.00	0.00	0.01	8.89	10.44	14.76	14.12

Activity Report

Efficiency Factors

Alpha Efficiency: (%)	0.30	±	0.00	**Beta Efficiency: (%)**	0.19	±	0.00

Sample ID	Quantity	Alpha (DPM)	2σ	Alpha MDA (DPM)	Beta Activity (DPM)	2σ	Beta MDA (DPM)
20000120145104-~~A37~~ 77	0.00	0.00	0.01	8.89	20.87	20.87	14.12
20000120145215-~~A38~~ 78	0.00	0.00	0.02	8.89	31.31	25.57	14.12
20000120145324-~~A39~~ 79	0.00	0.00	0.02	8.89	36.53	27.61	14.12
20000120145435-~~A40~~ 80	0.00	0.00	0.00	8.89	5.22	10.44	14.12

Reviewed by: Dawn Meyer

Sample I.D.	Nuclide Name	Activity uCi/smear	1-Sigma % Error
20021010-32	CS-137	3.50E-06	44.57
20021010-33	K-40	1.18E-04	21.67
20021010-34	There are no nuclides meeting the summary criteria		
20021010-35	There are no nuclides meeting the summary criteria		
20021010-36	CS-137	4.94E-06	28.53
20021010-37	There are no nuclides meeting the summary criteria		
20021010-38	CS-137	6.97E-06	30.20
20021010-39	CS-137	1.02E-05	20.20
20021010-40	There are no nuclides meeting the summary criteria		
20021010-41	CS-137	3.73E-06	34.52
20021010-42	CS-137	1.53E-05	33.95
20021010-43	CS-137	2.26E-05	18.83
20021010-44	CS-137	2.47E-05	14.64
20021010-45	CS-137	2.18E-05	16.55
20021010-46	There are no nuclides meeting the summary criteria		
20021010-47	There are no nuclides meeting the summary criteria		
20021010-48	There are no nuclides meeting the summary criteria		
20021010-49	K-40	6.71E-05	24.17
	CS-137	3.26E-06	34.96
20021010-50	There are no nuclides meeting the summary criteria		
20021010-51	There are no nuclides meeting the summary criteria		
20021010-52	There are no nuclides meeting the summary criteria		
20021010-53	CS-137	2.03E-05	15.60
20021010-54	CS-137	1.15E-05	20.20
20021010-55	CS-137	5.55E-06	34.96
20021010-56	There are no nuclides meeting the summary criteria		
20021010-57	K-40	6.36E-05	33.45
	CS-137	7.64E-06	31.22
20021010-58	There are no nuclides meeting the summary criteria		
20021010-59	There are no nuclides meeting the summary criteria		
20021010-60	CS-137	3.41E-04	9.54

COPY

C.O.C. Number
20021010

Brookhaven National Laboratory
Safety and Environmental Protection Division
Radiological Analysis Laboratory

GAMMA RESULTS

Reviewed by: Robert R. Gaschott 2/15/00

Sample I.D.	Nuclide Name	Activity uCi/smear	1-Sigma % Error
20021010-01	CS-137	1.84E-05	15.16
20021010-02	There are no nuclides meeting the summary criteria		
20021010-03	CS-137	9.03E-06	36.64
20021010-04	There are no nuclides meeting the summary criteria		
20021010-05	There are no nuclides meeting the summary criteria		
20021010-06	CS-137	6.37E-06	35.96
20021010-07	CS-137	7.85E-06	31.72
20021010-08	CS-137	6.83E-06	24.71
20021010-09	There are no nuclides meeting the summary criteria		
20021010-10	CS-137	7.33E-06	25.85
	RA-224	1.16E-04	31.15
20021010-11	CS-137	4.38E-06	42.50
20021010-12	There are no nuclides meeting the summary criteria		
20021010-13	There are no nuclides meeting the summary criteria		
20021010-14	There are no nuclides meeting the summary criteria		
20021010-15	There are no nuclides meeting the summary criteria		
20021010-16	There are no nuclides meeting the summary criteria		
20021010-17	There are no nuclides meeting the summary criteria		
20021010-18	RA-226	6.66E-05	35.72
20021010-19	PB-214	1.33E-05	30.99
20021010-20	RA-226	8.17E-05	39.03
20021010-21	There are no nuclides meeting the summary criteria		
20021010-22	There are no nuclides meeting the summary criteria		
20021010-23	There are no nuclides meeting the summary criteria		
20021010-24	CS-137	1.41E-05	18.71
20021010-25	CS-137	8.41E-06	33.55
20021010-26	CS-137	2.37E-05	17.23
20021010-27	There are no nuclides meeting the summary criteria		
20021010-28	There are no nuclides meeting the summary criteria		
20021010-29	There are no nuclides meeting the summary criteria		
20021010-30	CS-137	1.33E-05	23.17
20021010-31	CS-137	3.61E-06	35.06

COPY

COPY

SAMPLE I.D. NUMBER	ALPHA dpm	ALPHA Error	BETA dpm	BETA Error			MDL - dpm Alpha	MDL - dpm Beta	
20021010-43	0.0	0.0	138.7	35.5			8.6	19.9	
20021010-44	3.2	6.4	85.4	28.3			8.6	19.9	
20021010-45	0.0	0.0	70.4	26.0			8.6	19.9	
20021010-46	0.0	0.0	14.9	14.2			8.6	19.9	
20021010-47	0.0	0.0	0.0	8.5			8.6	19.9	
20021010-48	0.0	0.0	29.9	18.1			8.6	19.9	
20021010-49	0.0	0.0	6.4	11.3			8.6	19.9	
20021010-50	0.0	0.0	17.1	14.8			8.6	19.9	
20021010-51	3.2	6.4	4.3	10.5			8.6	19.9	
20021010-52	3.2	6.4	10.7	12.8			8.6	19.9	
20021010-53	0.0	0.0	44.8	21.3			8.6	19.9	
20021010-54	0.0	0.0	12.8	13.5			8.6	19.9	
20021010-55	0.0	0.0	2.1	9.5			8.6	19.9	
20021010-56	0.0	0.0	-2.1	7.4			8.6	19.9	
20021010-57	0.0	0.0	4.3	10.5			8.6	19.9	
20021010-58	0.0	0.0	4.3	10.5			8.6	19.9	
20021010-59	0.0	0.0	14.9	14.2			8.6	19.9	
20021010-60	0.0	0.0	482.4	64.7			8.6	19.9	

SAMPLE I.D. NUMBER	ALPHA dpm	ALPHA Error	BETA dpm	BETA Error			MDL - dpm Alpha	MDL - dpm Beta	
20021010-17	0.0	0.0	4.3	10.5			8.6	19.9	
20021010-18	0.0	0.0	8.5	12.1			8.6	19.9	
20021010-19	3.2	6.4	4.3	10.5			8.6	19.9	
20021010-20	0.0	0.0	-2.1	7.4			8.6	19.9	
20021010-21	0.0	0.0	4.3	10.5			8.6	19.9	
20021010-22	3.2	6.4	21.3	16.0			8.6	19.9	
20021010-23	0.0	0.0	2.1	9.5			8.6	19.9	
20021010-24	0.0	0.0	29.9	18.1			8.6	19.9	
20021010-25	0.0	0.0	21.3	16.0			8.6	19.9	
20021010-26	0.0	0.0	34.2	19.1			8.6	19.9	
20021010-27	0.0	0.0	12.8	13.5			8.6	19.9	
20021010-28	0.0	0.0	-2.1	7.4			8.6	19.9	
20021010-29	6.4	9.0	42.7	20.9			8.6	19.9	
20021010-30	0.0	0.0	40.6	20.5			8.6	19.9	
20021010-31	0.0	0.0	6.4	11.3			8.6	19.9	
20021010-32	0.0	0.0	4.3	10.5			8.6	19.9	
20021010-33	0.0	0.0	-2.1	7.4			8.6	19.9	
20021010-34	0.0	0.0	17.1	14.8			8.6	19.9	
20021010-35	0.0	0.0	21.3	16.0			8.6	19.9	
20021010-36	0.0	0.0	40.6	20.5			8.6	19.9	
20021010-37	3.2	6.4	12.8	13.5			8.6	19.9	
20021010-38	0.0	0.0	40.6	20.5			8.6	19.9	
20021010-39	0.0	0.0	42.7	20.9			8.6	19.9	
20021010-40	0.0	0.0	34.2	19.1			8.6	19.9	
20021010-41	0.0	0.0	10.7	12.8			8.6	19.9	
20021010-42	0.0	0.0	47.0	21.8			8.6	19.9	

COPY

C.O.C. NUMBER
20021010

BROOKHAVEN NATIONAL LABORATORY
SAFETY AND ENVIRONMENTAL PROTECTION DIVISION
Radiological Analysis Laboratory

RADIOLOGICAL REPORT

COPY

Reviewed by: Robert R. Gaschott 2/11/00

SAMPLE I.D. NUMBER	ALPHA dpm	ALPHA Error	BETA dpm	BETA Error			MDL - dpm Alpha	MDL - dpm Beta	
20021010-01	0.0	0.0	51.2	22.6			8.6	19.9	
20021010-02	0.0	0.0	19.2	15.4			8.6	19.9	
20021010-03	0.0	0.0	17.1	14.8			8.6	19.9	
20021010-04	3.2	6.4	12.8	13.5			8.6	19.9	
20021010-05	3.2	6.4	29.9	18.1			8.6	19.9	
20021010-06	0.0	0.0	6.4	11.3			8.6	19.9	
20021010-07	0.0	0.0	47.0	21.8			8.6	19.9	
20021010-08	3.2	6.4	12.8	13.5			8.6	19.9	
20021010-09	0.0	0.0	21.3	16.0			8.6	19.9	
20021010-10	15.9	14.3	8.5	12.1			8.6	19.9	
20021010-11	0.0	0.0	14.9	14.2			8.6	19.9	
20021010-12	0.0	0.0	6.4	11.3			8.6	19.9	
20021010-13	3.2	6.4	4.3	10.5			8.6	19.9	
20021010-14	0.0	0.0	12.8	13.5			8.6	19.9	
20021010-15	3.2	6.4	12.8	13.5			8.6	19.9	
20021010-16	0.0	0.0	4.3	10.5			8.6	19.9	

C. O. C. Number
20021010

Contractor Number

BROOKHAVEN NATIONAL LABORATORY
SAFETY & ENVIRONMENTAL PROTECTION DIVISION

ANALYTICAL SERVICES LABORATORY
BLDG 535A
UPTON, N.Y. 11973-5000

COPY

Chain of Custody Information

BNL P.O. No:
Ship to:
Pick Up by:
Attention:

Bioassay samples will not be accepted if bottles are filled above the shoulder.

Project Name: BGRR

Requested by: R. Miltenberger
Life Number: 14088
Account No.: 7314 Dept. Code: ER

E-Mail Reports to:
EP Manager: R. Miltenberger
FSS Manager: D. Mergen

SAMPLER: John P. Young
SAMPLER:
SAMPLER:

Priority Authorization
Group Leader or Higher CALL
x2502 (Rad), x4860 (Non-Rad)

FILL OUT ONLY SHADED AREAS. CANNOT ACCEPT SAMPLES WITH ACTIVITY >1mR/hr

ASL Number	Sample Information									Container		Analysis Requested***									
	Grid	-ID	Date	-C	Time	Bldg. #	Matrix	Description		#	vol.	αβ	3H	γ	Sr90	MET	WQ	VOA	PCB	pH	
20021010-49			02/09/00		1400	704	smear	Pedestal top fan room #3	smear #49	1	NA	x		x							
20021010-50			02/09/00		1400	704	smear	Pedestal top fan room #3	smear #50	1	NA	x		x							
20021010-51			02/09/00		1400	704	smear	Pedestal top fan room #3	smear #51	1	NA	x		x							
20021010-52			02/09/00		1400	704	smear	Pedestal top fan room #3	smear #52	1	NA	x		x							
20021010-53			02/09/00		1400	704	smear	Pedestal top fan room #3	smear #53	1	NA	x		x							
20021010-54			02/09/00		1400	704	smear	Pedestal top fan room #3	smear #54	1	NA	x		x							
20021010-55			02/09/00		1400	704	smear	Pedestal top fan room #3	smear #55	1	NA	x		x							
20021010-56			02/09/00		1400	704	smear	Pedestal top fan room #3	smear #56	1	NA	x		x							
20021010-57			02/09/00		1400	704	smear	Pedestal top fan room #3	smear #57	1	NA	x		x							
20021010-58			02/09/00		1400	704	smear	Pedestal top fan room #3	smear #58	1	NA	x		x							
20021010-59			02/09/00		1400	704	smear	Pedestal top fan room #3	smear #59	1	NA	x		x							
20021010-60			02/09/00		1400	704	smear	Pedestal top fan room #3	smear #60	1	NA	x		x							

Must be one of the samplers

Transferred to :	John P. Young	RA Brown			
Signed by:	John P. Young	RA Brown			
Date/time	2/9/00 1400	2/10/00 0950			

***OTHER ANALYSIS NOT LISTED

COMMENTS

C. O. C. Number
20021010

Contractor Number

BROOKHAVEN NATIONAL LABORATORY
SAFETY & ENVIRONMENTAL PROTECTION DIVISION

ANALYTICAL SERVICES LABORATORY
BLDG 535A
UPTON, N.Y. 11973-5000

COPY

Chain of Custody Information

BNL P.O. No:
Ship to:
Pick Up by:
Attention:

Bioassay samples will not be accepted if bottles are filled above the shoulder.

Project Name: BGRR			
Requested by: R. Miltenberger	E-Mail Reports to:	SAMPLER: John P. Young	Priority Authorization
Life Number: 14088	EP Manager: R. Miltenberger	SAMPLER:	Group Leader or Higher CALL
Account No.: 7314 Dept. Code: ER	FSS Manager: D. Mergen	SAMPLER:	x2502 (Rad), x4860 (Non-Rad)

FILL OUT ONLY SHADED AREAS. CANNOT ACCEPT SAMPLES WITH ACTIVITY >1mR/hr

ASL Number	Sample Information									Container		Analysis Requested***									
	Grid	-ID	Date	-C	Time	Bldg. #	Matrix	Description		#	vol.	αβ	3H	γ	Sr90	MET	WQ	VOA	PCB	pH	
20021010-37			02/09/00		1400	704	smear	Pedestal top fan room #3	smear #37	1	NA	x		x							
20021010-38			02/09/00		1400	704	smear	Pedestal top fan room #3	smear #38	1	NA	x		x							
20021010-39			02/09/00		1400	704	smear	Pedestal top fan room #3	smear #39	1	NA	x		x							
20021010-40			02/09/00		1400	704	smear	Pedestal top fan room #3	smear #40	1	NA	x		x							
20021010-41			02/09/00		1400	704	smear	Pedestal top fan room #3	smear #41	1	NA	x		x							
20021010-42			02/09/00		1400	704	smear	Pedestal top fan room #3	smear #42	1	NA	x		x							
20021010-43			02/09/00		1400	704	smear	Pedestal top fan room #3	smear #43	1	NA	x		x							
20021010-44			02/09/00		1400	704	smear	Pedestal top fan room #3	smear #44	1	NA	x		x							
20021010-45			02/09/00		1400	704	smear	Pedestal top fan room #3	smear #45	1	NA	x		x							
20021010-46			02/09/00		1400	704	smear	Pedestal top fan room #3	smear #46	1	NA	x		x							
20021010-47			02/09/00		1400	704	smear	Pedestal top fan room #3	smear #47	1	NA	x		x							
20021010-48			02/09/00		1400	704	smear	Pedestal top fan room #3	smear #48	1	NA	x		x							

Must be one of the samplers

Transferred to :	John P. Young	RA Brown			
Signed by:	John P. Young	RA Brown			
Date/time	2/9/00 1400	2/10/00 0950			

***OTHER ANALYSIS NOT LISTED

COMMENTS

C. O. C. Number
20021010

Contractor Number

BROOKHAVEN NATIONAL LABORATORY
SAFETY & ENVIRONMENTAL PROTECTION DIVISION

ANALYTICAL SERVICES LABORATORY
BLDG 535A
UPTON, N.Y. 11973-5000

Chain of Custody Information

COPY

BNL P.O. No:
Ship to:
Pick Up by:
Attention:

Bioassay samples will not be accepted if bottles are filled above the shoulder.

Project Name: BGRR

Requested by: R. Miltenberger
Life Number: 14088
Account No.: 7314 Dept. Code: ER

E-Mail Reports to:
EP Manager: R. Miltenberger
FSS Manager: D. Mergen

SAMPLER: John P. Young
SAMPLER:
SAMPLER:

Priority Authorization
Group Leader or Higher CALL
x2502 (Rad), x4860 (Non-Rad)

FILL OUT ONLY SHADED AREAS. CANNOT ACCEPT SAMPLES WITH ACTIVITY >1mR/hr

ASL Number	Sample Information									Container		Analysis Requested***									
	Grid	-ID	Date	-C	Time	Bldg #	Matrix	Description		#	vol.	αβ	3H	γ	Sr90	MET	WQ	VOA	PCB	pH	
20021010-25			02/09/00		1400	704	smear	Pedestal top fan room #3	smear #25	1	NA	x		x							
20021010-26			02/09/00		1400	704	smear	Pedestal top fan room #3	smear #26	1	NA	x		x							
20021010-27			02/09/00		1400	704	smear	Pedestal top fan room #3	smear #27	1	NA	x		x							
20021010-28			02/09/00		1400	704	smear	Pedestal top fan room #3	smear #28	1	NA	x		x							
20021010-29			02/09/00		1400	704	smear	Pedestal top fan room #3	smear #29	1	NA	x		x							
20021010-30			02/09/00		1400	704	smear	Pedestal top fan room #3	smear #30	1	NA	x		x							
20021010-31			02/09/00		1400	704	smear	Pedestal top fan room #3	smear #31	1	NA	x		x							
20021010-32			02/09/00		1400	704	smear	Pedestal top fan room #3	smear #32	1	NA	x		x							
20021010-33			02/09/00		1400	704	smear	Pedestal top fan room #3	smear #33	1	NA	x		x							
20021010-34			02/09/00		1400	704	smear	Pedestal top fan room #3	smear #34	1	NA	x		x							
20021010-35			02/09/00		1400	704	smear	Pedestal top fan room #3	smear #35	1	NA	x		x							
20021010-36			02/09/00		1400	704	smear	Pedestal top fan room #3	smear #36	1	NA	x		x							

Must be one of the samplers

Transferred to :	John P. Young	RA Brown			
Signed by:	John P. Young	RA Brown			
Date/time	2/9/00 1400	2/10/00 0950			

***OTHER ANALYSIS NOT LISTED

COMMENTS

C. O. C. Number
20021010

Contractor Number

BROOKHAVEN NATIONAL LABORATORY
SAFETY & ENVIRONMENTAL PROTECTION DIVISION

ANALYTICAL SERVICES LABORATORY
BLDG 535A
UPTON, N.Y. 11973-5000

COPY

Chain of Custody Information

BNL P.O. No:
Ship to:
Pick Up by:
Attention:

Bioassay samples will not be accepted if bottles are filled above the shoulder.

Project Name: BGRR			
Requested by: R. Miltenberger	E-Mail Reports to:	SAMPLER: John P. Young	Priority Authorization
Life Number: 14088	EP Manager: R. Miltenberger	SAMPLER:	Group Leader or Higher CALL
Account No.: 7314 Dept. Code: ER	FSS Manager: D. Mergen	SAMPLER:	x2502 (Rad), x4860 (Non-Rad)

FILL OUT ONLY SHADED AREAS. CANNOT ACCEPT SAMPLES WITH ACTIVITY >1mR/hr

ASL Number	Sample Information									Container		Analysis Requested***									
	Grid	-ID	Date	-C	Time	Bldg. #	Matrix	Description		#	vol.	αβ	3H	γ	Sr90	MET	WQ	VOA	PCB	pH	
20021010-13			02/09/00		1400	704	smear	Pedestal top fan room #3	smear #13	1	NA	x		x							
20021010-14			02/09/00		1400	704	smear	Pedestal top fan room #3	smear #14	1	NA	x		x							
20021010-15			02/09/00		1400	704	smear	Pedestal top fan room #3	smear #15	1	NA	x		x							
20021010-16			02/09/00		1400	704	smear	Pedestal top fan room #3	smear #16	1	NA	x		x							
20021010-17			02/09/00		1400	704	smear	Pedestal top fan room #3	smear #17	1	NA	x		x							
20021010-18			02/09/00		1400	704	smear	Pedestal top fan room #3	smear #18	1	NA	x		x							
20021010-19			02/09/00		1400	704	smear	Pedestal top fan room #3	smear #19	1	NA	x		x							
20021010-20			02/09/00		1400	704	smear	Pedestal top fan room #3	smear #20	1	NA	x		x							
20021010-21			02/09/00		1400	704	smear	Pedestal top fan room #3	smear #21	1	NA	x		x							
20021010-22			02/09/00		1400	704	smear	Pedestal top fan room #3	smear #22	1	NA	x		x							
20021010-23			02/09/00		1400	704	smear	Pedestal top fan room #3	smear #23	1	NA	x		x							
20021010-24			02/09/00		1400	704	smear	Pedestal top fan room #3	smear #24	1	NA	x		x							

Must be one of the samplers

Transferred to :	John P. Young	RA Brown			
Signed by:	John P. Young	RA Brown			
Date/time	2/9/00 1400	2/10/00 0950			

***OTHER ANALYSIS NOT LISTED

COMMENTS

C. O. C. Number
20021010

Contractor Number

BROOKHAVEN NATIONAL LABORATORY
SAFETY & ENVIRONMENTAL PROTECTION DIVISION

ANALYTICAL SERVICES LABORATORY
BLDG 535A
UPTON, N.Y. 11973-5000

COPY

Chain of Custody Information

BNL P.O. No:
Ship to:
Pick Up by:
Attention:

Bioassay samples will not be accepted if bottles are filled above the shoulder.

Project Name: BGRR			
Requested by: R. Miltenberger	**E-Mail Reports to:**	**SAMPLER:** John P. Young	**Priority Authorization**
Life Number: 14088	**EP Manager:** R. Miltenberger	**SAMPLER:**	**Group Leader or Higher CALL**
Account No.: 7314 **Dept. Code:** ER	**FSS Manager:** D. Mergen	**SAMPLER:**	x2502 (Rad), x4860 (Non-Rad)

FILL OUT ONLY SHADED AREAS. CANNOT ACCEPT SAMPLES WITH ACTIVITY >1mR/hr

ASL Number	Sample Information									Container		Analysis Requested***									
	Grid	-ID	Date	-C	Time	Bldg. #	Matrix	Description		#	vol.	αβ	3H	γ	Sr90	MET	WQ	VOA	PCB	pH	
20021010-01			02/09/00		1400	704	smear	Pedestal top fan room #3	smear #1	1	NA	x		x							
20021010-02			02/09/00		1400	704	smear	Pedestal top fan room #3	smear #2	1	NA	x		x							
20021010-03			02/09/00		1400	704	smear	Pedestal top fan room #3	smear #3	1	NA	x		x							
20021010-04			02/09/00		1400	704	smear	Pedestal top fan room #3	smear #4	1	NA	x		x							
20021010-05			02/09/00		1400	704	smear	Pedestal top fan room #3	smear #5	1	NA	x		x							
20021010-06			02/09/00		1400	704	smear	Pedestal top fan room #3	smear #6	1	NA	x		x							
20021010-07			02/09/00		1400	704	smear	Pedestal top fan room #3	smear #7	1	NA	x		x							
20021010-08			02/09/00		1400	704	smear	Pedestal top fan room #3	smear #8	1	NA	x		x							
20021010-09			02/09/00		1400	704	smear	Pedestal top fan room #3	smear #9	1	NA	x		x							
20021010-10			02/09/00		1400	704	smear	Pedestal top fan room #3	smear #10	1	NA	x		x							
20021010-11			02/09/00		1400	704	smear	Pedestal top fan room #3	smear #11	1	NA	x		x							
20021010-12			02/09/00		1400	704	smear	Pedestal top fan room #3	smear #12	1	NA	x		x							

Must be one of the samplers

Transferred to :	John P. Young	RA Brown			
Signed by:	John P. Young	RA Brown			
Date/time	2/9/00 1400	2/10/00 0950			

***OTHER ANALYSIS NOT LISTED	COMMENTS

BLDG #: 704 LOCATION: Primary Fan Room # 3 DATE/TIME: 2-10-00 / 1600

REASON FOR SURVEY: ☐ ROUTINE ☒ SPECIAL RWP #: BGRR-04

INSTRUMENTS. MODEL / SERIAL #: MODEL 3 50545-98-00 / L135100 092286 2-11-01

DOSE RATES (HIGHEST)		AIRBORNE CONTAMINATION		
CONTACT	NA	TIME	cpm	%DAC
GENERAL AREA	L.2	NA	NA	NA

LEGEND: O SMEAR SURVEY LOCATION ☐ MASSLINN SURVEY LOCATION

XXX Y
ZZZ

XXX - CONTACT READING
ZZZ - READING @ 30 Cm

Y - RADIATION TYPE

SMEAR SURVEY RESULTS (DPM/100 cm²) ³H (B-γ) (α)

1.		8.		15.		22.	
2.		9.		16.		23.	
3.		10.		17.		24.	
4.		11.		18.		25.	
5.		12.		19.		26.	
6.		13.		20.		27.	
7.		14.		21.		28.	

MASSLINN SURVEY RESULTS (DPM/LAS)

1.	NA	8.	NA
2.		9.	
3.		10.	
4.		11.	
5.		12.	
6.		13.	
7.		14.	

BROOKHAVEN GRAPHITE RESEARCH REACTOR
CHARACTERIZATION SURVEY MAP

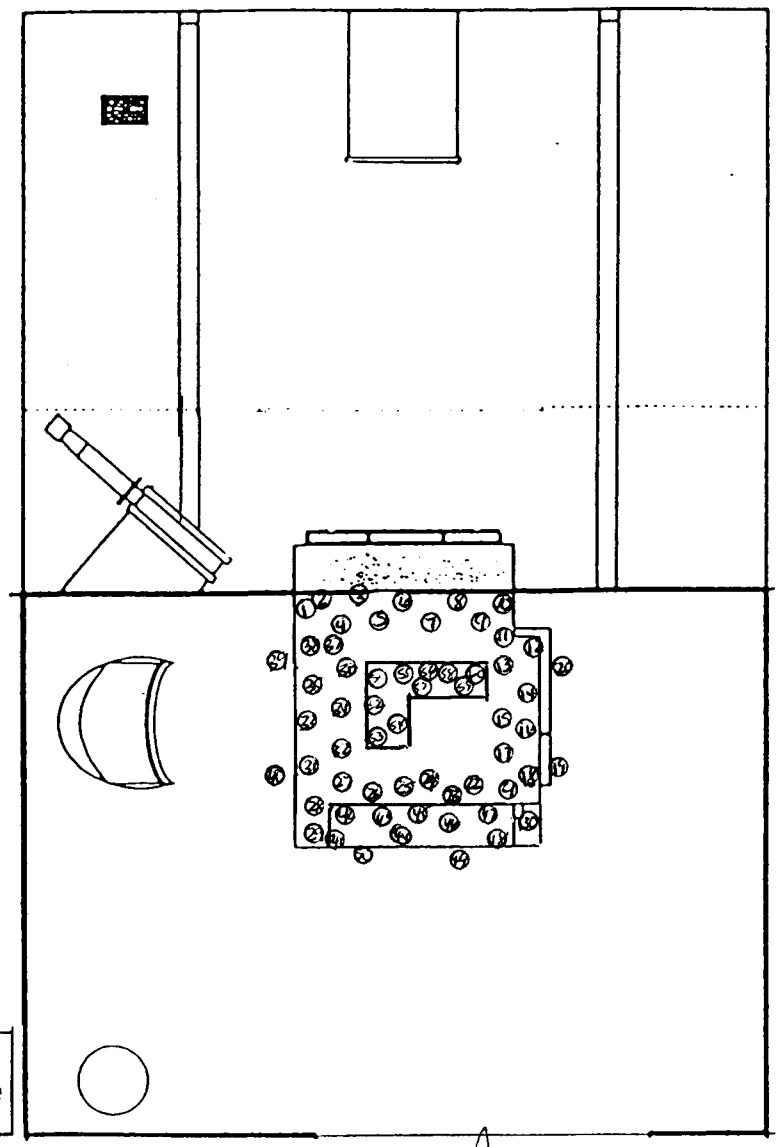

SURVEYED BY: D. Mayer FOR NEAL DEARTH
Signature/date

REVIEWED BY: Damian Mayer 3/8/2K
Signature/date

BNL RADIOLOGICAL SURVEY FORM

REASON FOR SURVEY

BLDG #: 704 LOCATION: FAN ROOM #3 DATE/TIME: 2/16/00 1400 ☐ ROUTINE ☒ SPECIAL RWP #: BGRR 04

INSTRUMENTS, MODEL / SERIAL #: LB5100 092296 2-11-01

DOSE RATES (HIGHEST)		AIRBORNE CONTAMINATION		
CONTACT	NA	TIME	uCi/cc	%DAC
GENERAL AREA	NA	NA	NA	NA

LEGEND: ○ SMEAR SURVEY LOCATION ☐ MASSLINN SURVEY LOCATION

XXX Y / ZZZ — XXX - CONTACT READING; ZZZ - READING @ 30 Cm; Y - RADIATION TYPE

SMEAR SURVEY RESULTS (DPM/100 cm²) ³H (B-γ) (α)

1.	SEE ATTACHED	8.	SEE ATTACHED	15.	NA	22.	NA
2.		9.		16.		23.	
3.		10.		17.		24.	
4.		11.	NA	18.		25.	
5.		12.		19.		26.	
6.		13.		20.		27.	
7.		14.		21.		28.	

MASSLINN SURVEY RESULTS (DPM/

1.	NA	8.	NA
2.		9.	
3.		10.	
4.		11.	
5.		12.	
6.		13.	
7.		14.	

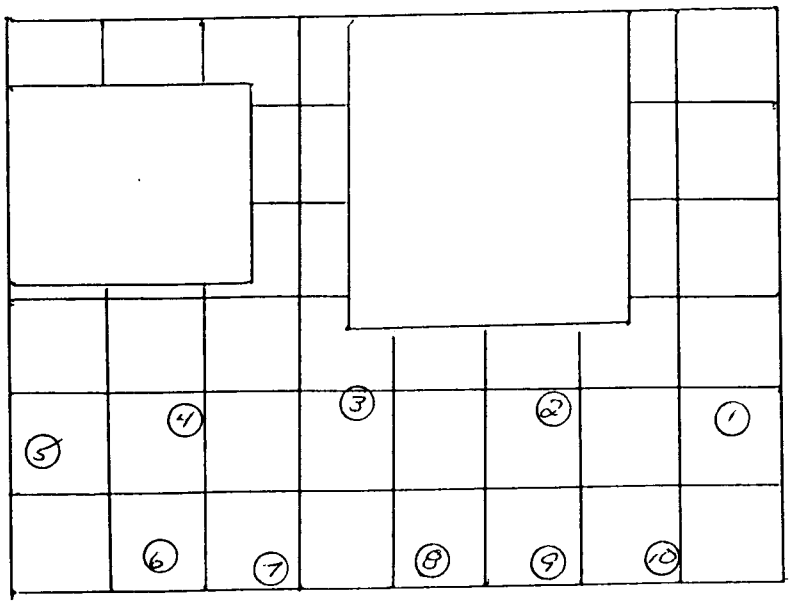

SURVEYED BY: [signature] Signature/date 2/17/00 0800

REVIEWED BY: Dorian Mergen 3/8/2K Signature/date

Form FS-1000.1 FS-SOP-1000 rev 1 attch 8.2 page 11 File Code

BNL RADIOLOGICAL SURVEY FORM

REASON FOR SURVEY: ☐ ROUTINE ☒ SPECIAL

BLDG #: 704 LOCATION: Primary Fan Room #3 DATE/TIME: 2-10-00 0902 RWP #: 00RGR04

INSTRUMENTS, MODEL / SERIAL #: MODEL #3 50545 9-8-00

CONTAMINATION CONTINUATION SHEET

LEGEND: O SMEAR SURVEY LOCATION O MASSLINN SURVEY LOCATION

SMEAR SURVEY RESULTS (DPM/100 cm²) ³H B-γ α

29.	<100	<MDA	52.	<100	<MDA	75.	<100	<MDA
30.	164		53.			76.		
31.	<100		54.			77.		
32.			55.			78.		
33.			56.			79.		
34.			57.			80.		
35.			58.			81.		
36.			59.			82.		
37.			60.			83.		
38.			61.			84.	102	
39.			62.			85.	<100	
40.			63.			86.		
41.			64.			87.		
42.			65.			88.		
43.			66.			89.		
44.			67.			90.		
45.			68.			91.		
46.			69.			92.		
47.			70.			93.		
48.			71.			94.		
49.			72.			95.		
50.			73.			96.		
51.			74.			97.		

98. 160
99. <100
100. <100
101. <100

<MDA

SURVEYED BY: [signature] 2-12-00
Signature/date

REVIEWED BY: [signature] 2/16/00
Signature/date

REASON FOR SURVEY

BLDG #: 704 LOCATION: Primary Fan Room #3 DATE/TIME: 1330 / 2-11-00 ROUTINE SPECIAL RWP #: 0BER04

INSTRUMENTS, MODEL / SERIAL #: MODEL 3 50545 9-8-00

DOSE RATES (HIGHEST)		AIRBORNE CONTAMINATION		
CONTACT	N/A	TIME	uCi/cc	%DAC
GENERAL AREA	<.2			

LEGEND: O SMEAR SURVEY LOCATION O MASSLINN SURVEY LOCATION

XXX Y / ZZZ — XXX - CONTACT READING; ZZZ - READING @ 30 Cm; Y - RADIATION TYPE

SMEAR SURVEY RESULTS (DPM/100 cm²) ³H B-γ α				MASSLINN SURVEY RESULTS (DPM/LAS)	
1.	8.	15.	22.	1. <1	8.
2.	9.	16.	23.	2. <1	9.
3.	10.	17.	24.	3. <1	10.
4.	11.	18.	25.	4. <1	11.
5.	12.	19.	26.	5. <1	12.
6.	13.	20.	27.	6. <1	13.
7.	14.	21.	28.	7. <1	14.

NA NA NA

NOTE:
MASSLINN
BEFORE DIRECT FRISK

BROOKHAVEN GRAPHITE RESEARCH REACTOR CHARACTERIZATION SURVEY MAP

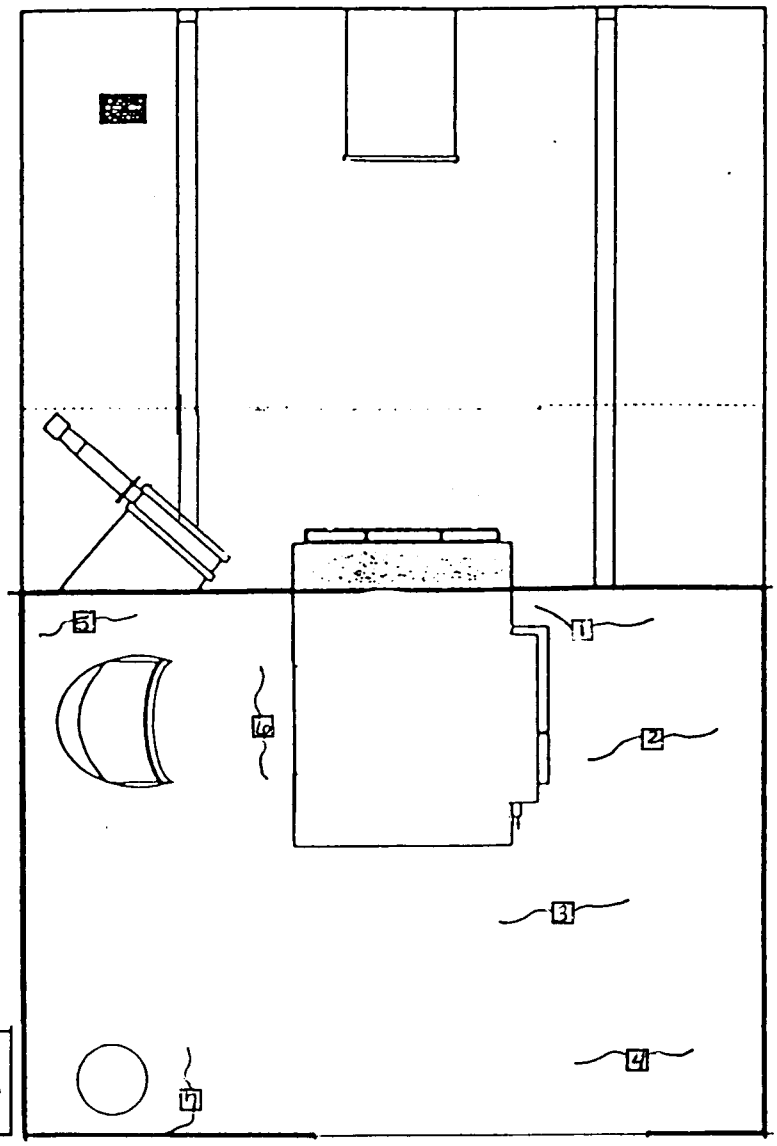

SURVEYED BY: [signature] 2-11-00 Signature/date

REVIEWED BY: [signature] 2/16/00 Signature/date

BNL RADIOLOGICAL SURVEY FORM

REASON FOR SURVEY ☐ ☒

BLDG #: 704 LOCATION: Primary Fan Room #3 DATE/TIME: 2-10-00 0900 ROUTINE SPECIAL RWP #: 00 [illegible] 04

INSTRUMENTS, MODEL / SERIAL #: Model 350545 9-8-00 / LB-5100 092286 2-11-01

DOSE RATES (HIGHEST)		AIRBORNE CONTAMINATION		
CONTACT	NA	TIME	uCi/cc	%DAC
GENERAL AREA	NA	NA	NA	NA

LEGEND: O SMEAR SURVEY LOCATION ☐ MASSLINN SURVEY LOCATION

XXX Y / ZZZ — XXX = CONTACT READING; ZZZ = READING @ 30 Cm; Y = RADIATION TYPE

SMEAR SURVEY RESULTS (DPM/100 cm²) ^3H B-γ α

	Bγ	α		Bγ	α		Bγ	α		Bγ	α
1.	<100	<MDA	8.	<100	<MDA	15.	<100	<MDA	22.	<100	<MDA
2.			9.			16.			23.		
3.			10.			17.			24.		
4.			11.			18.			25.		
5.			12.			19.			26.		
6.			13.			20.			27.		
7.			14.			21.			28.		

MASSLINN SURVEY RESULTS (DPM/LAS)

1.	NA	8.	NA
2.		9.	
3.		10.	
4.		11.	
5.		12.	
6.		13.	
7.		14.	

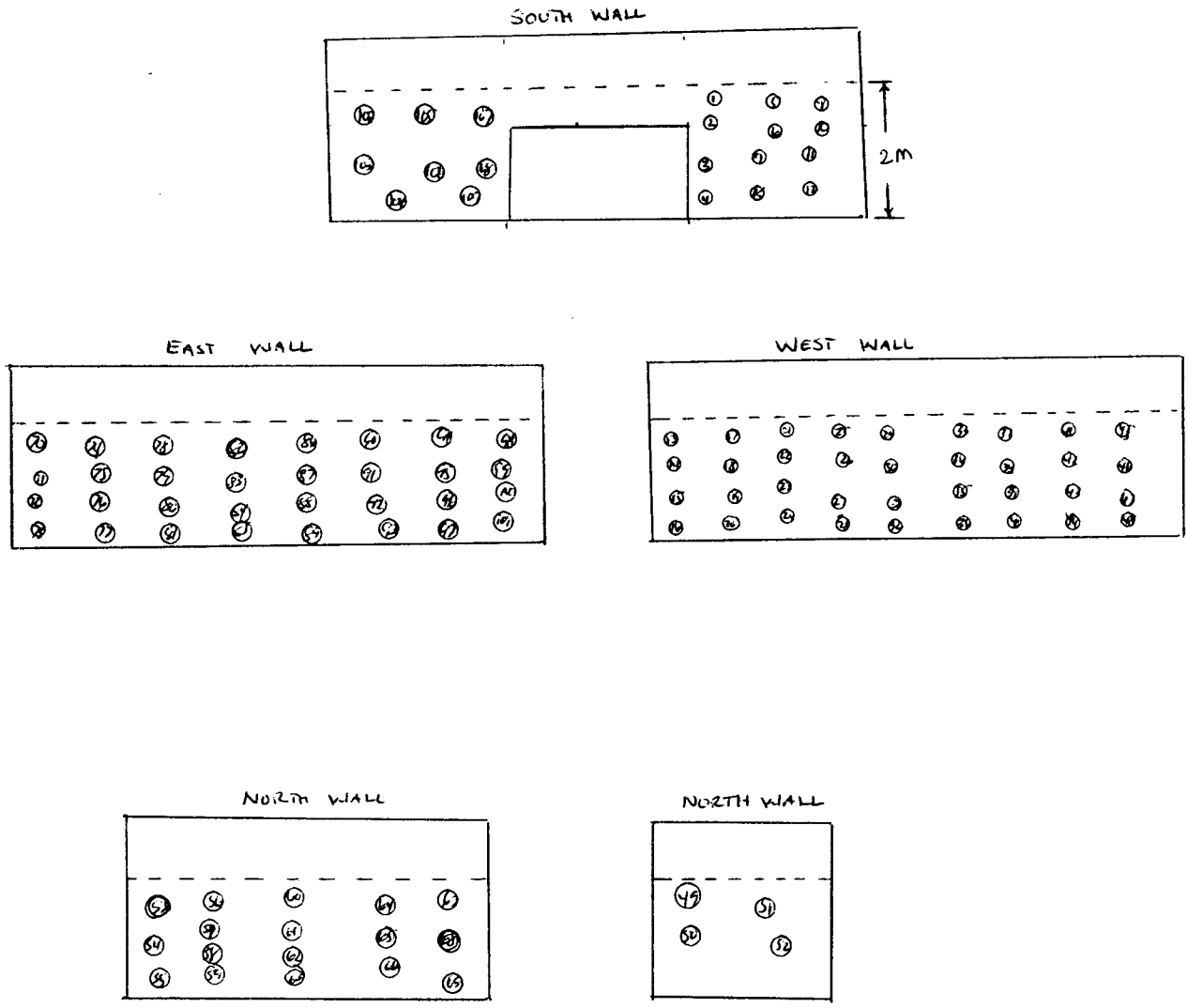

SURVEYED BY: [signature] 2-12-00 Signature/date

REVIEWED BY: [signature] 2/16/00 Signature/date

BNL RADIOLOGICAL SURVEY FORM

REASON FOR SURVEY: ☐ ROUTINE ☒ SPECIAL

BLDG #: 704 LOCATION: FAN House # 1 DATE/TIME: 2-13-00/0900 RWP #: [illegible]

INSTRUMENTS, MODEL / SERIAL #: LUDLUM 177 75655 2-4-01 / LR-5100 092296 2-11-01

DOSE RATES (HIGHEST)		AIRBORNE CONTAMINATION		
		TIME	uCi/cc	%DAC
CONTACT	NA			
GENERAL AREA		NA	NA	NA

LEGEND: O SMEAR SURVEY LOCATION; O MASSLINN SURVEY LOCATION

XXX Y / ZZZ — XXX = CONTACT READING; ZZZ = READING @ 30 Cm; Y = RADIATION TYPE

SMEAR SURVEY RESULTS (DPM/100 cm²) ³H B-γ α

1. SEE ATTACHED		8. SEE ATTACHED		15.		22.	
2.		9.		16.		23.	
3.		10.		17.		24.	
4.		11.		18.		25. NA	
5.		12.		19. NA		26.	
6.		13. NA		20.		27.	
7.		14.		21.		28.	

MASSLINN SURVEY RESULTS (DPM

1. <1		8.	
2. <1		9.	
3. <1		10.	
4. <1		11. NA	
5.		12.	
6. NA		13.	
7.		14.	

Direct Frisk EAST WALL <100 cpm unless NOTED

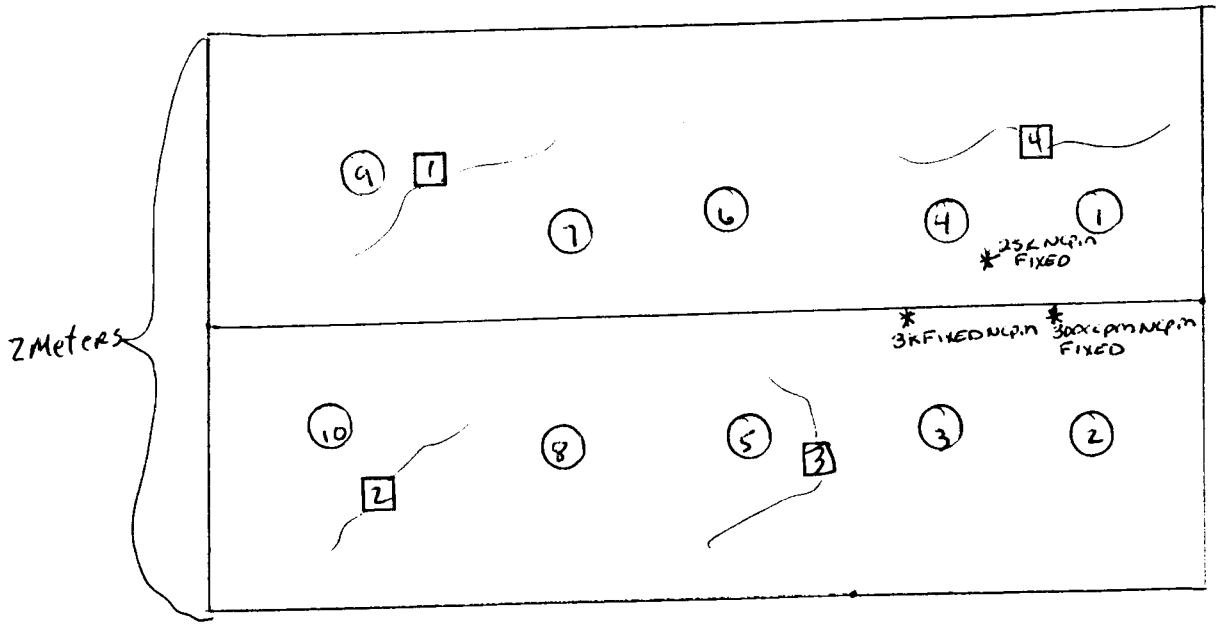

SURVEYED BY: Mark Blomeil 2/13/00 Signature/date

REVIEWED BY: Signature/date 2-16-00

File Cod

2/15/00
4:16:50PM

Activity Report

FAN #1 EAST WALL

Batch Name:	50	**Acquisition Date:**	2/15/00
Batch ID:	Wipes Sample Counts - 200002151444	**Acquisition Time: (minutes)**	1.0
Group:	E		
Device:	LASP	**Operating Voltage: (volts)**	1,290.0
Selected Geometry:	1/8" Stainless Steel		

Efficiency Factors

Alpha Efficiency: (%)	0.31	±	0.00	**Beta Efficiency: (%)**	0.19	±	0.00

Sample ID	Quantity	Alpha (DPM)	2σ	Alpha MDA (DPM)	Beta Activity (DPM)	2σ	Beta MDA (DPM)
20000215144429-E90	0.00	-0.67	0.65	13.68	42.03	31.17	30.59
20000215160537-E91	0.00	-0.66	0.65	13.68	16.13	20.84	30.59
20000215160648-E92	0.00	-0.66	0.65	13.68	21.31	23.28	30.59
20000215160808-E93	0.00	-0.66	0.65	13.68	16.13	20.84	30.59
20000215160918-E94	0.00	-0.65	0.65	13.68	5.76	14.82	30.59
20000215161038-E96	0.00	-0.65	0.65	13.68	10.94	18.08	30.59
20000215161148-E97	0.00	-0.66	0.65	13.68	21.31	23.28	30.59
20000215161308-E98	0.00	-0.65	0.65	13.68	10.94	18.08	30.59
20000215161418-E64	0.00	-0.66	0.65	13.68	16.13	20.84	30.59
20000215161538-E65	0.00	-0.65	0.65	13.68	0.58	10.59	30.59

Reviewed by: 2/16/06

BNL RADIOLOGICAL SURVEY FORM

REASON FOR SURVEY

☐ ☒

)G #: 704 LOCATION: FAN House # 1 DATE/TIME: 2-13-00 / 0930 ROUTINE SPECIAL RWP #: 00BGRR04

TRUMENTS. MODEL / SERIAL #: LUDLUM 177 75655 2-4-01 / LB-5100 092296 2-11-01

DOSE RATES (HIGHEST)		AIRBORNE CONTAMINATION		
		TIME	µCi/cc	%DAC
NTACT	NA			
NERAL AREA		NA	NA	NA

LEGEND: O SMEAR SURVEY LOCATION ☐ MASSLINN SURVEY LOCATION

XXX Y / ZZZ

XXX - CONTACT READING
ZZZ - READING @ 30 Cm

Y - RADIATION TYPE

IEAR SURVEY RESULTS (DPM/100 cm²) ³H B-γ α				MASSLINN SURVEY RESULTS (DPM/LAS)	
SEE ATTACHED	8. SEE ATTACHED	15.	22.	1. LIK	8.
	9.	16.	23.	2. LIK	9.
	10.	17.	24.	3. LIK	10.
	11.	18. NA	25. NA	4. LIK	11.
	12.	19.	26.	5.	12. NA
	13. NA	20.	27.	6. NA	13.
	14.	21.	28.	7.	14.

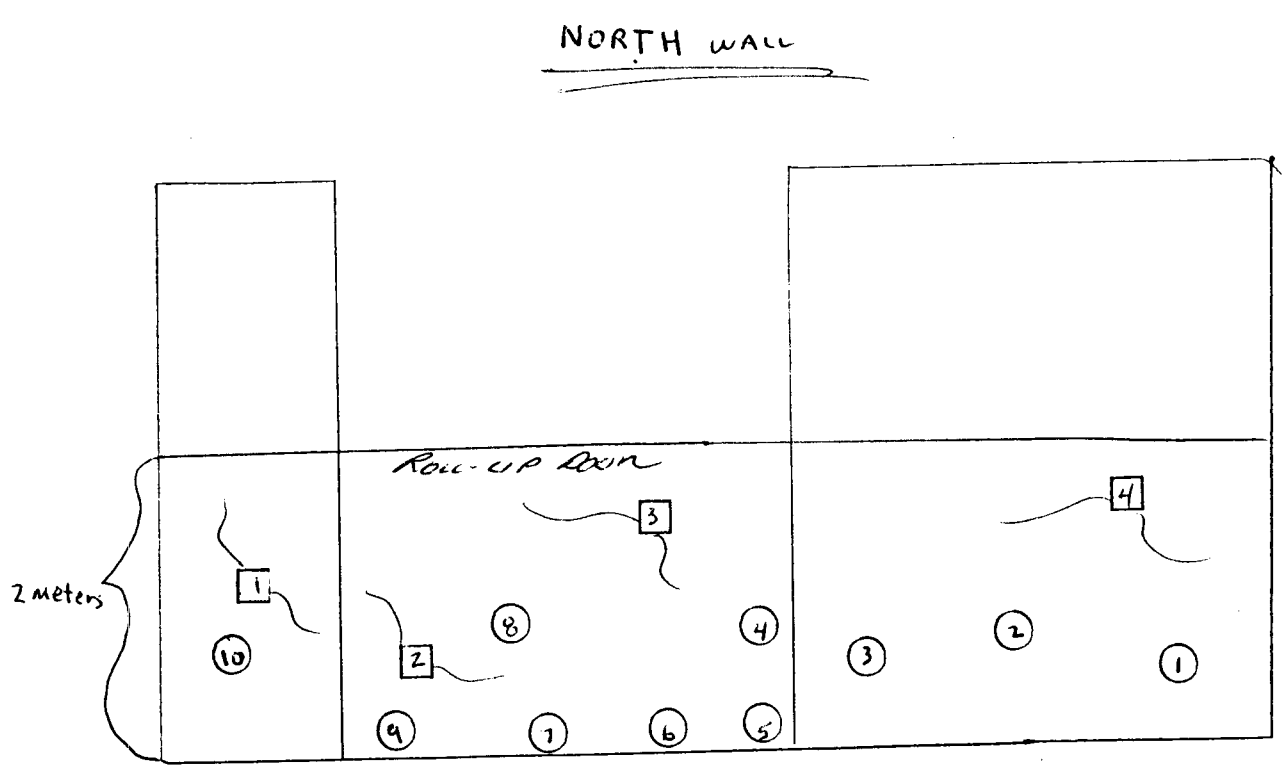

NOTE: NO DETECTABLE ON DIRECT FRISK OF WALL

SURVEYED BY: Mark Blancisch 2/13/00 REVIEWED BY: [signature] 2-16-00

Signature/date Signature/date

orm FS-1000.1 [signature] 2-13-00 FS-SOP-1000, rev 1, attch 8.2, page 11 File Code: HP31

2/15/00
4:04:19PM

Activity Report

FAN #1 NORTH WALL

Batch Name:	49	**Acquisition Date:**	2/15/00
Batch ID:	Wipes Sample Counts - 200002151441	**Acquisition Time: (minutes)**	1.0
Group:	D		
Device:	LASP	**Operating Voltage: (volts)**	1,290.0
Selected Geometry:	1/8" Stainless Steel		

Efficiency Factors

Alpha Efficiency: (%)	0.31	±	0.00	**Beta Efficiency: (%)**	0.19	±	0.00

Sample ID	Quantity	Alpha (DPM)	2σ	Alpha MDA (DPM)	Beta Activity (DPM)	2σ	Beta MDA (DPM)
20000215144149-D51	0.00	-0.66	0.65	13.68	26.49	25.48	30.59
20000215155306-D50	0.00	-0.65	0.65	13.68	10.94	18.08	30.59
20000215155416-D49	0.00	-0.65	0.65	13.68	0.58	10.59	30.59
20000215155527-D48	0.00	-0.65	0.65	13.68	10.94	18.08	30.59
20000215155647-D47	0.00	2.59	6.52	13.68	20.99	23.28	30.59
20000215155757-D46	0.00	-0.65	0.65	13.68	-4.60	2.20	30.59
20000215155918-D45	0.00	-0.66	0.65	13.68	31.67	27.51	30.59
20000215160027-D44	0.00	-0.65	0.65	13.68	5.76	14.82	30.59
20000215160147-D43	0.00	-0.65	0.65	13.68	5.76	14.82	30.59
20000215160257-D42	0.00	-0.65	0.65	13.68	10.94	18.08	30.59

Reviewed by: 2·16·00

BNL RADIOLOGICAL SURVEY FORM

REASON FOR SURVEY ☐ ROUTINE ☐ SPECIAL

BLDG #: 704 LOCATION: FAN House #2 DATE/TIME: 2-11-00 | 1800 RWP #: 04

INSTRUMENTS, MODEL / SERIAL #: Model # 3 # 50545 9-8-00

DOSE RATES (HIGHEST)		AIRBORNE CONTAMINATION		
CONTACT	N/A	TIME	uCi/cc	%DAC
GENERAL AREA				

LEGEND: O SMEAR SURVEY LOCATION ☐ MASSLINN SURVEY LOCATIO

XXX Y / ZZZ — XXX = CONTACT READING; ZZZ = READING @ 30 Cm; Y = RADIATION TYPE

SMEAR SURVEY RESULTS (DPM/100 cm²) ³H B-γ α

1.		8.		15.		22.	
2.		9.		16.		23.	
3.		10.		17.		24.	
4.	N/A	11.	N/A	18.	N/A	25.	N/A
5.		12.		19.		26.	
6.		13.		20.		27.	
7.		14.		21.		28.	

MASSLINN SURVEY RESULTS (DP

1.	<1K	8.	
2.		9.	
3.		10.	
4.		11.	
5.	<1K	12.	N/A
6.	N/A	13.	
7.		14.	

Close out & Contamination Verification

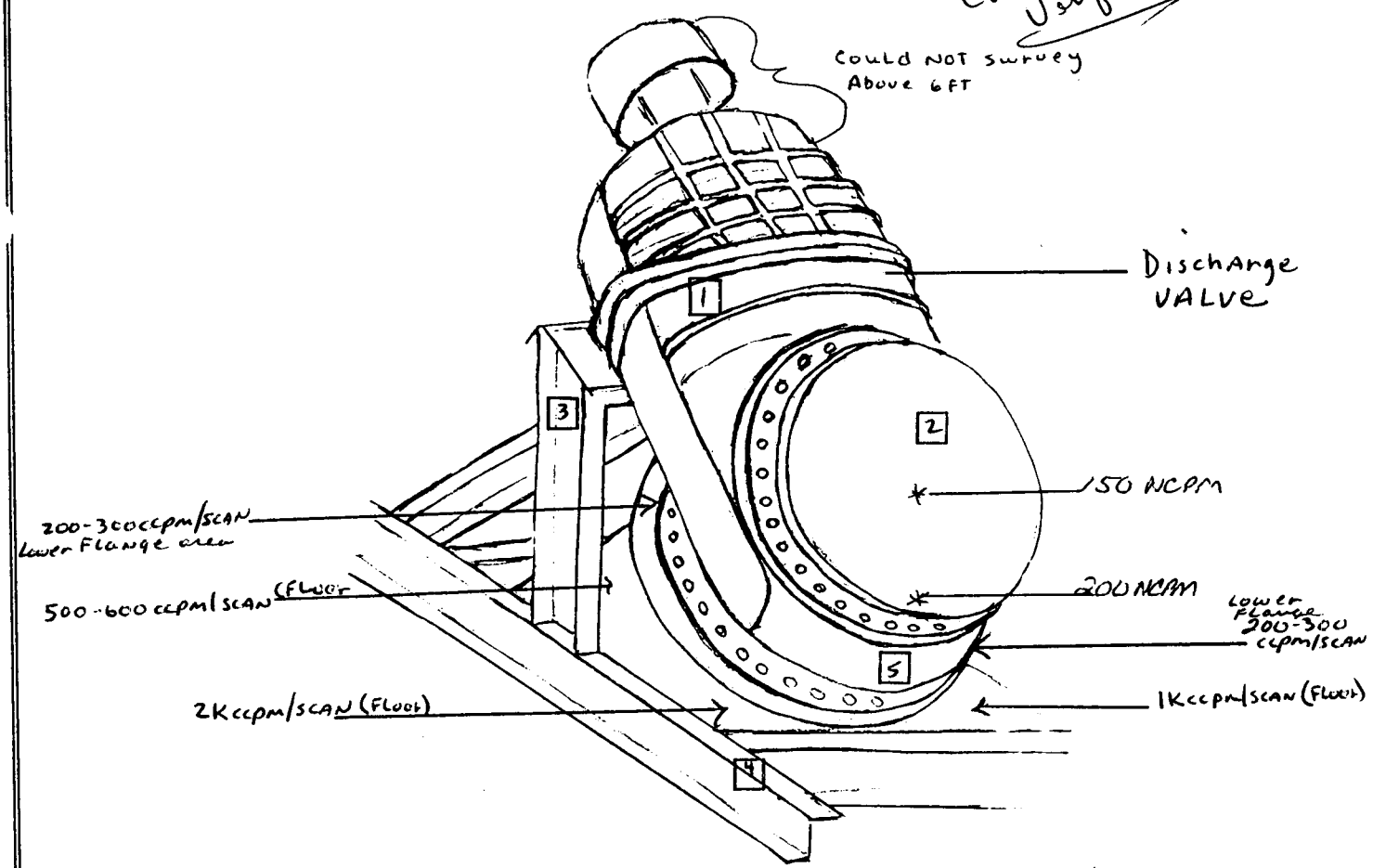

Direct frisk of Discharge VALVE + Supports <100ccpm unless NOTED

SURVEYED BY: Mark Blanciak 2/11/00 Signature/date

REVIEWED BY: Dorian Meyer 2/12/00 Signature/date

BNL RADIOLOGICAL SURVEY FORM

REASON FOR SURVEY

BLDG #: 704 LOCATION: FAN House # 2 DATE/TIME: 2-11-00/0800 ☐ ROUTINE ☐ SPECIAL RWP #: 00-BGM-04

INSTRUMENTS, MODEL / SERIAL #: Model-3 # 50545, 9-8-00

DOSE RATES (HIGHEST)		AIRBORNE CONTAMINATION		
CONTACT	N/A	TIME	uCi/cc	%DAC
GENERAL AREA		NA	NA	NA

LEGEND: O SMEAR SURVEY LOCATION ☐ MASSLINN SURVEY LOCATION

XXX Y / ZZZ — XXX = CONTACT READING; ZZZ = READING @ 30 Cm; Y = RADIATION TYPE

SMEAR SURVEY RESULTS (DPM/100 cm²) ³H B-γ α

1.		8.		15.		22.					
2.		9.		16.		23.					
3.		10.		17.		24.					
4.	N/A	11.	N/A	18.	N/A	25.	N/A				
5.		12.		19.		26.					
6.		13.		20.		27.					
7.		14.		21.		28.					

MASSLINN SURVEY RESULTS (DPM/LAS)

1.	<1K	8.	
2.		9.	
3.		10.	
4.		11.	
5.		12.	N/A
6.		13.	
7.	<1K	14.	

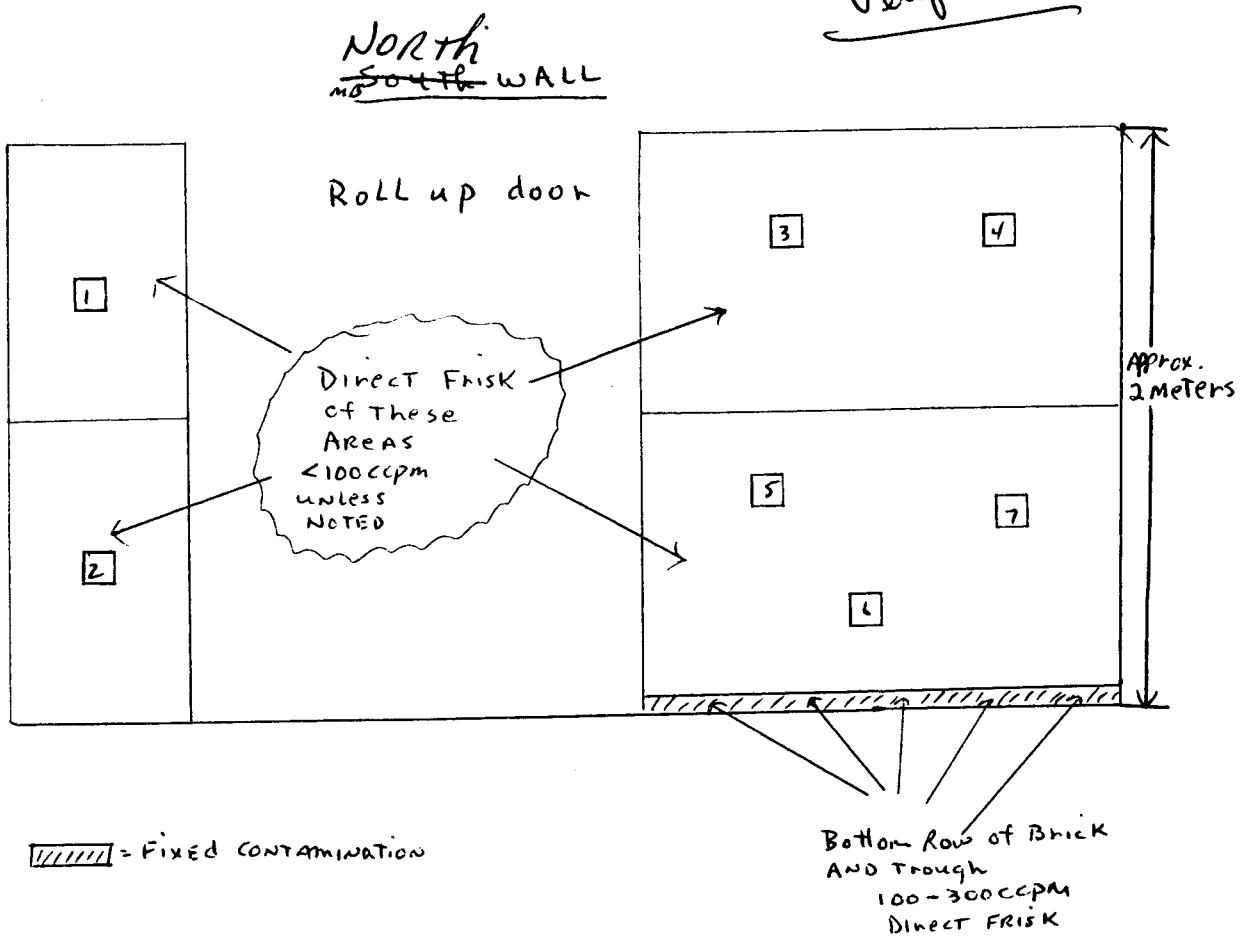

SURVEYED BY: Mark Blancroft 2/11/00 Signature/date

REVIEWED BY: [signature] 2-16-00 Signature/date

BNL RADIOLOGICAL SURVEY FORM

REASON FOR SURVEY

BLDG #: 704 LOCATION: FAN House #2 DATE/TIME: 2-11-00 / 10:00 ROUTINE ☐ SPECIAL ☐ RWP #: 00 BGRR-04

INSTRUMENTS, MODEL / SERIAL #: Model-3 #50545, 9-8-00

DOSE RATES (HIGHEST)		AIRBORNE CONTAMINATION			LEGEND: O SMEAR SURVEY LOCATION ☐ MASSLINN SURVEY LOCATION
CONTACT	N/A	TIME	nCi/cc	%DAC	XXX Y / ZZZ — XXX = CONTACT READING; ZZZ = READING @ 30 Cm; Y = RADIATION TYPE
GENERAL AREA					

SMEAR SURVEY RESULTS (DPM/100 cm²) ³H B-γ α

1.		8.		15.		22.			
2.		9.		16.		23.			
3.		10.		17.		24.			
4.		11.		18.		25.			
5.	N/A	12.	N/A	19.	N/A	26.	N/A		
6.		13.		20.		27.			
7.		14.		21.		28.			

MASSLINN SURVEY RESULTS (DPM/LAS)

1.	<1K	8.	
2.		9.	
3.		10.	
4.		11.	
5.		12.	N/A
6.		13.	
7.	<1K	14.	

Contamination Verification

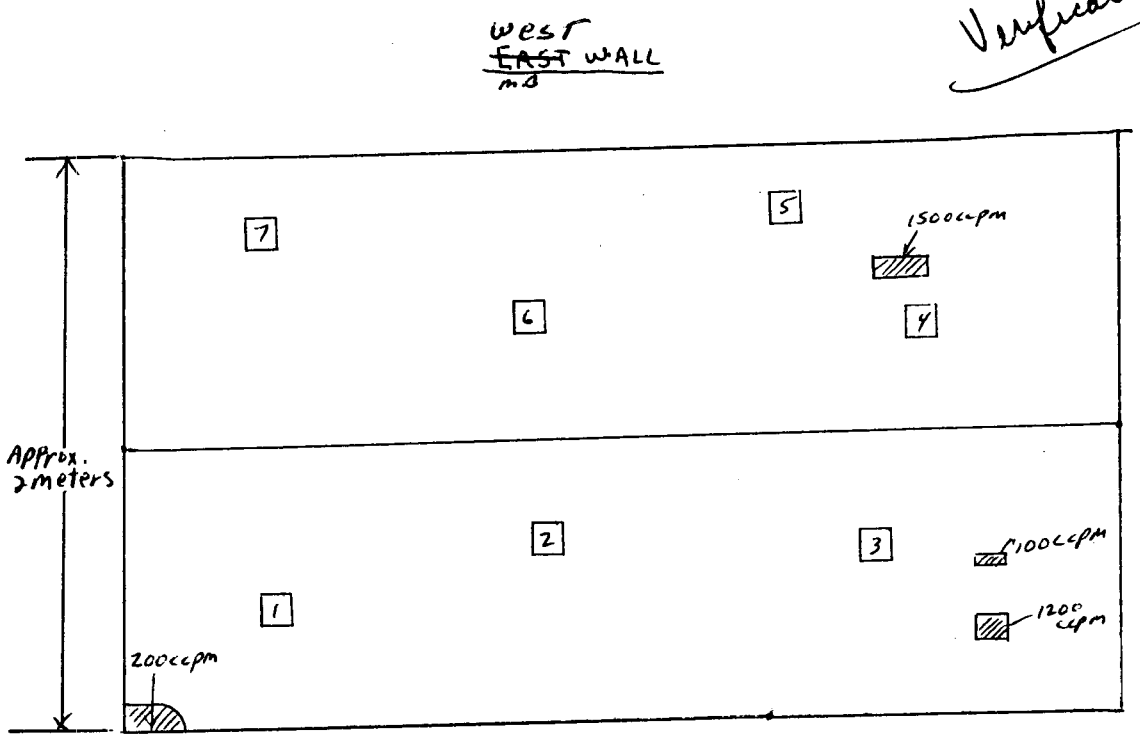

Direct Frisk of EAST WALL 2meters off Floor <100ccpm/SCAN unless Noted

▨ = FIXED CONTAMINATION

↑ Gross MASSLINN OF These AREAS <100 ccpm/LAS

SURVEYED BY: Mark Blancick / 2-11-00 REVIEWED BY: [signature] 2-16-00

Signature/date Signature/date

Form FS-1000.1 FS-SOP-1000, rev 1, attch 8.2, page 11 File Code: HP31

BNL RADIOLOGICAL SURVEY FORM

REASON FOR SURVEY ☐ ROUTINE ☒ SPECIAL

BLDG #: 704 LOCATION: FAN House # 2 DATE/TIME: 2-10-00 / 1830 RWP #: 04

INSTRUMENTS, MODEL / SERIAL #: Model #3 # 50545, 9-8-00

DOSE RATES (HIGHEST)		AIRBORNE CONTAMINATION		
CONTACT	N/A	TIME	uCi/cc	%DAC
GENERAL AREA		NA	NA	NA

LEGEND: O SMEAR SURVEY LOCATION ☐ MASSLINN SURVEY LOCATION

XXX Y / ZZZ — XXX - CONTACT READING; ZZZ - READING @ 30 Cm; Y - RADIATION TYPE

SMEAR SURVEY RESULTS (DPM/100 cm²) ³H B-γ α

1.		8.		15.		22.	
2.		9.		16.		23.	
3.		10.		17.		24.	
4.		11.		18.		25.	
5.	N/A	12.	N/A	19.	N/A	26.	N/A
6.		13.		20.		27.	
7.		14.		21.		28.	

MASSLINN SURVEY RESULTS (DPM/

1.	<1K	8.	
2.	↓	9.	
3.		10.	
4.	<1K	11.	
5.		12.	N/A
6.	N/A	13.	
7.		14.	

Contamination Verification

EAST ~~West~~ WALL

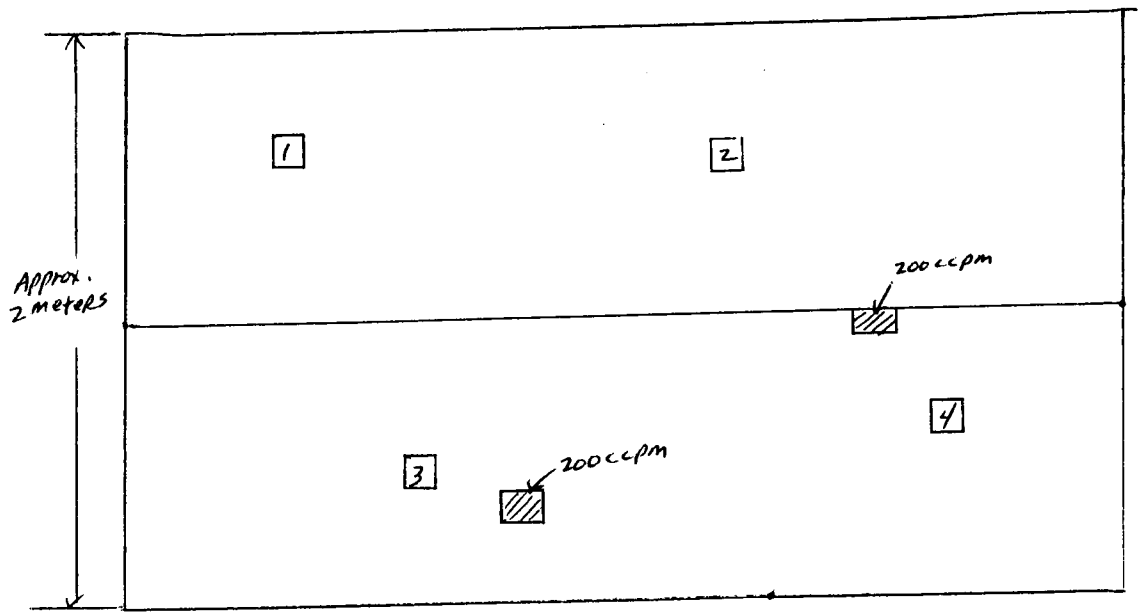

Direct FRISK of West WALL 2 Meters off Floor <100ccpm/SCAN UNLESS NOTED

▨ = Fixed Cotamination

Gross MASSLINN of these areas <100ccpm/LAS

SURVEYED BY: Mark Blanchard 2-10-00 Signature/date

REVIEWED BY: [signature] Signature/date 2-16-00

Form FS-1000.1 FS-SOP-1000, rev 1, attch 8.2, page 11 File Code

BNL RADIOLOGICAL SURVEY FORM

REASON FOR SURVEY ☐ ROUTINE ☐ SPECIAL RWP #: 00-BLRR-04

BLDG #: 704 LOCATION: FAN House #2 DATE/TIME: 2-11-00 / 1100

INSTRUMENTS, MODEL / SERIAL #: Model-3 #50545, 9-8-00

DOSE RATES (HIGHEST)		AIRBORNE CONTAMINATION		
CONTACT	N/A	TIME	uCi/cc	%DAC
GENERAL AREA		NA	NA	NA

LEGEND: O SMEAR SURVEY LOCATION ☐ MASSLINN SURVEY LOCATION

XXX Y / ZZZ — XXX = CONTACT READING; ZZZ = READING @ 30 Cm; Y = RADIATION TYPE

SMEAR SURVEY RESULTS (DPM/100 cm²) ³H B-γ α

1.		8.		15.		22.	
2.		9.		16.		23.	
3.		10.		17.		24.	
4.		11.		18.		25.	
5.	N/A	12.	N/A	19.	N/A	26.	N/A
6.		13.		20.		27.	
7.		14.		21.		28.	

MASSLINN SURVEY RESULTS (DPM/

1.	<1K	8.	
2.		9.	
3.		10.	
4.		11.	
5.	<1K	12.	N/A
6.	N/A	13.	
7.		14.	

Contamination Verification

South ~~NORTH~~ WALL

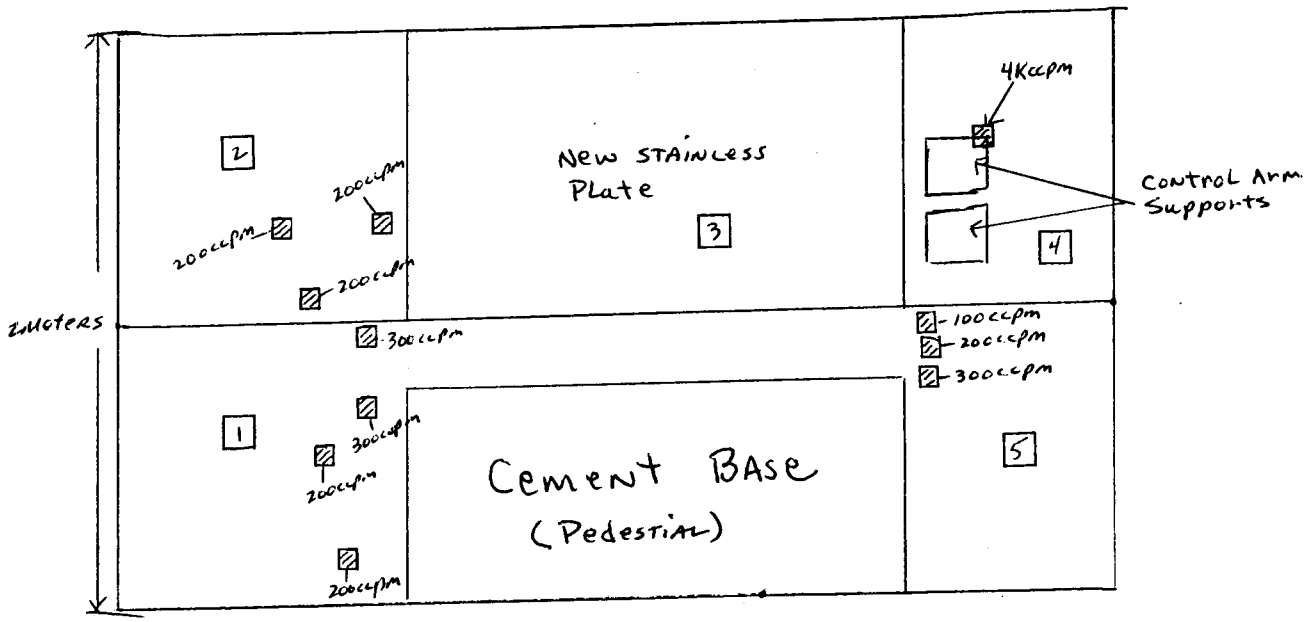

Direct FRISK of NORTH WALL 2meters off Floor <100ccpm/SCAN unless NOTED

▨ = Fixed contamination

↑ gross MASSLINN of these areas <100ccpm

SURVEYED BY: Mark Blaucioch 2-11-00 Signature/date

REVIEWED BY: [signature] Signature/date 2/16/00

File Code

BNL RADIOLOGICAL SURVEY FORM

REASON FOR SURVEY ☐ ROUTINE ☐ SPECIAL RWP #: 00-BGRR-04

BLDG #: 704 LOCATION: FAN House # 2 DATE/TIME: 2-11-00/1300

INSTRUMENTS, MODEL / SERIAL #: Model 3 #50545, 9-8-00

DOSE RATES (HIGHEST)		AIRBORNE CONTAMINATION		
CONTACT	N/A	TIME	uCi/cc	%DAC
GENERAL AREA				

LEGEND: O SMEAR SURVEY LOCATION ☐ MASSLINN SURVEY LOCATION

XXX Y / ZZZ — XXX = CONTACT READING; ZZZ = READING @ 30 Cm; Y = RADIATION TYPE

SMEAR SURVEY RESULTS (DPM/100 cm²) ³H (B-γ) (α)

1. <100	<MDA	8. <100	<MDA	15. <100	<MDA	22. <100	<MDA
2.		9.		16.		23.	
3.		10.		17.		24.	
4.		11.		18.		25.	
5.		12.		19.		26.	
6.		13.		20.		27.	
7.		14.		21.		28. 179.52	
						29. <100	
						30 <100	

MASSLINN SURVEY RESULTS (DPM/LAS)

1. <1K	8.
2.	9.
3.	10.
4.	11.
5.	12. N/A
6.	13.
7. <1K	14.

MDA @ = 13.02

Top View of Cement Base And Pedestial

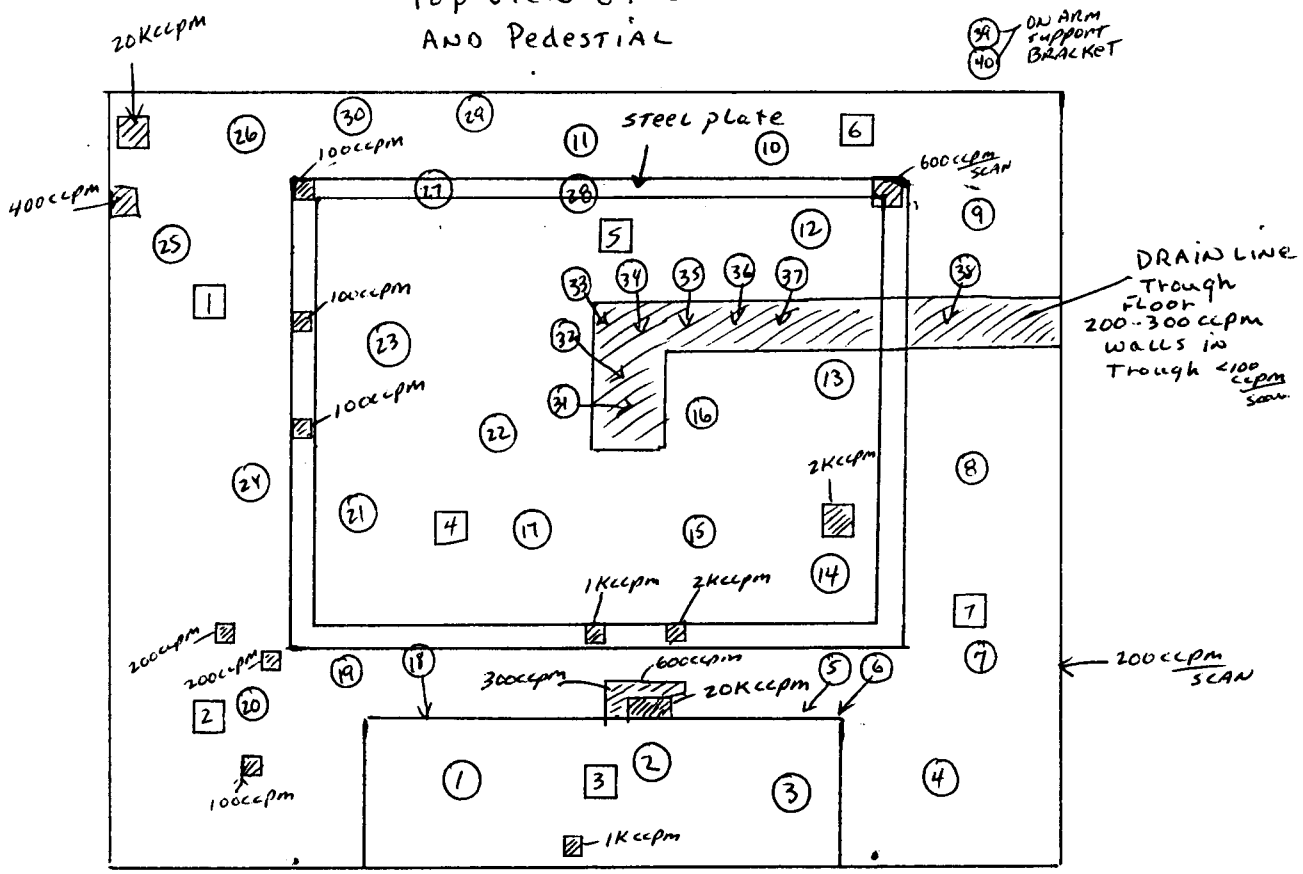

Direct Frisk of Cement Base + Pedestial including Sides
All <100ccpm unless noted

▨ = fixed contamination
Gross Masslinn these areas <100 ccpm

Post Decon Survey

SURVEYED BY: Mark Blaucirk / 2-11-00 Signature/date

REVIEWED BY: [signature] 2.16.00 Signature/date

BNL RADIOLOGICAL SURVEY FORM

REASON FOR SURVEY

DG #: 704 LOCATION: FAN House #2 DATE/TIME: 2-11-00/1300 ☐ ROUTINE ☐ SPECIAL RWP #: 00BGRR-04

TRUMENTS, MODEL / SERIAL #: Model 3 #50545 9-8-00

DOSE RATES (HIGHEST)		AIRBORNE CONTAMINATION			LEGEND: O SMEAR SURVEY LOCATION	O MASSLINN SURVEY LOCATION
ONTACT	N/A	TIME	uCi/cc	%DAC	XXX Y ZZZ	XXX - CONTACT READING ZZZ - READING @ 30 Cm
ENERAL AREA						Y - RADIATION TYPE

MEAR SURVEY RESULTS (DPM/100 cm²)		³H (B-γ) (α)						MASSLINN SURVEY RESULTS (DPM/LAS)	
<100	<MDA	38. <100	<MDA	15.		22.		1.	8.
		39.		16.		23.		2.	9.
		40.		17.		24.		3.	10.
		11.		18.		25.		4.	11.
		12.		19.		26.		5.	12.
		13.		20.		27.		6.	13.
		14.		21.		28.		7.	14.

N/A

N/A

N/A

RVEYED BY: Mark Blancioli 2-11-00 REVIEWED BY: Dorian Meryen 2/16/2K

Signature/date Signature/date

rm FS-1000.1 FS-SOP-1000, rev 1, attch 8.2, page 11 Page 2 of 2 File Code: HP3120

BNL RADIOLOGICAL SURVEY FORM

REASON FOR SURVEY ☐ ROUTINE ☐ SPECIAL

BLDG #: 704 LOCATION: FAN House # 2 DATE/TIME: 2-11-00 | 1830 RWP #: 04

INSTRUMENTS, MODEL / SERIAL #: Model #3, 50545 9-8-00 / LB5100 092296 2-11-01

DOSE RATES (HIGHEST)		AIRBORNE CONTAMINATION		
		TIME	µCi/cc	%DAC
CONTACT	N/A			
GENERAL AREA		NA	NA	NA

LEGEND: O SMEAR SURVEY LOCATION O MASSLINN SURVEY LOCATION

XXX Y / ZZZ — XXX = CONTACT READING; ZZZ = READING @ 30 Cm; Y = RADIATION TYPE

SMEAR SURVEY RESULTS (DPM/100 cm²) ³H (B-γ) α

1. Floor	See Attached	8. Floor	See Attached	15.		22.			
2.		9. Floor		16.		23.			
3.		10. Floor		17.		24.			
4.		11.		18.		25.			
5.		12.		19.	N/A	26.	N/A		
6.		13.	N/A	20.		27.			
7. Floor		14.		21.		28.			

MASSLINN SURVEY RESULTS (DPM/

1.	<1K	8.	
2.		9.	
3.		10.	
4.		11.	
5.		12.	N/A
6.		13.	
7.	<1K	14.	

Contamination Verification

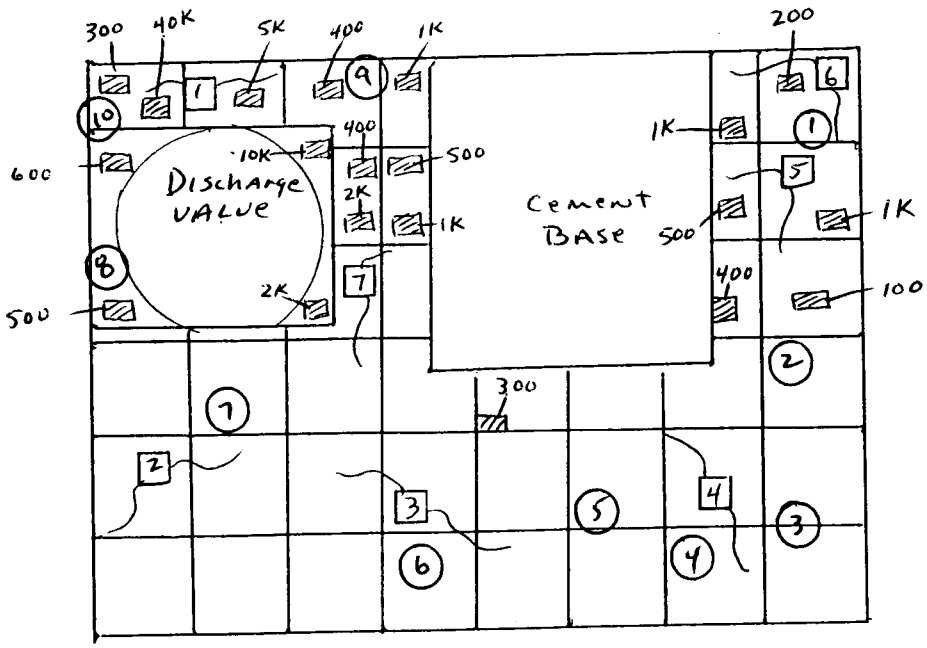

Direct Frisk of Floor <100 cpm/SCAN unless Noted

▨ = fixed Contamination Readings cpm

SURVEYED BY: Mark Blancio / 2-11-00 Signature/date

REVIEWED BY: [signature] 2/16/00 Signature/date

Form FS-1000-1 FS-SOP-1000 rev 1 attch 8.2 page 11 File Code:

Activity Report

FAN #2 FLOOR

Batch Name:	65	**Acquisition Date:**	2/16/00
Batch ID:	Wipes Sample Counts - 200002161425	**Acquisition Time: (minutes)**	1.0
Group:	B		
Device:	LASP	**Operating Voltage: (volts)**	1,290.0
Selected Geometry:	1/8" Stainless Steel		

Efficiency Factors

Alpha Efficiency: (%)	0.31	±	0.00	**Beta Efficiency: (%)**	0.19	±	0.00

Sample ID	Quantity	Alpha (DPM)	2σ	Alpha MDA (DPM)	Beta Activity (DPM)	2σ	Beta MDA (DPM)
20000216142528-B11	0.00	-1.47	0.97	16.12	15.17	20.87	32.34
20000216144750-B12	0.00	-1.47	0.97	16.12	20.35	23.30	32.34
20000216144800-B13	0.00	-1.47	0.97	16.12	15.17	20.87	32.34
20000216144810-B14	0.00	-1.47	0.97	16.12	15.17	20.87	32.34
20000216144820-B95	0.00	1.79	6.56	16.12	-0.69	10.66	32.34
20000216144830-B16	0.00	1.79	6.56	16.12	-0.69	10.66	32.34
20000216144840-B17	0.00	-1.47	0.97	16.12	20.35	23.30	32.34
20000216144850-B18	0.00	1.77	6.56	16.12	30.39	27.53	32.34
20000216144900-B19	0.00	-1.46	0.97	16.12	4.81	14.86	32.34
20000216144910-B20	0.00	-1.47	0.97	16.12	20.35	23.30	32.34

Reviewed by:

REASON FOR SURVEY

BLDG #: 704 LOCATION: Primary Fan Room # 2 DATE/TIME: 1/26/00 0845 ROUTINE ☐ SPECIAL ☐ RWP #: 00 BGRR 04

INSTRUMENTS, MODEL / SERIAL #: LB-5100 26249 3-12-00

DOSE RATES (HIGHEST)		AIRBORNE CONTAMINATION		
CONTACT	NA	TIME	mCi/cc	%DAC
GENERAL AREA	NA	NA	NA	NA

LEGEND: O SMEAR SURVEY LOCATION ☐ MASSLINN SURVEY LOCATION

XXX Y / ZZZ — XXX - CONTACT READING; ZZZ - READING @ 30 Cm; Y - RADIATION TYPE

SMEAR SURVEY RESULTS (DPM/100 cm²) ³H (B-γ) (α)

1. SEE ATTACHED	8. SEE ATTACHED	15. SEE ATTACHED	22. SEE ATTACHED
2.	9.	16.	23.
3.	10.	17.	24.
4.	11.	18.	25.
5.	12.	19.	26.
6.	13.	20.	27.
7.	14.	21.	28.

MASSLINN SURVEY RESULTS (DPM/LAS)

1. NA	8. NA
2.	9.
3.	10.
4.	11.
5.	12.
6.	13.
7.	14.

BROOKHAVEN GRAPHITE RESEARCH REACTOR CHARACTERIZATION SURVEY MAP

SURVEY OF FAN ROOM #2 PRIOR TO REGRESSING BOUNDARIES

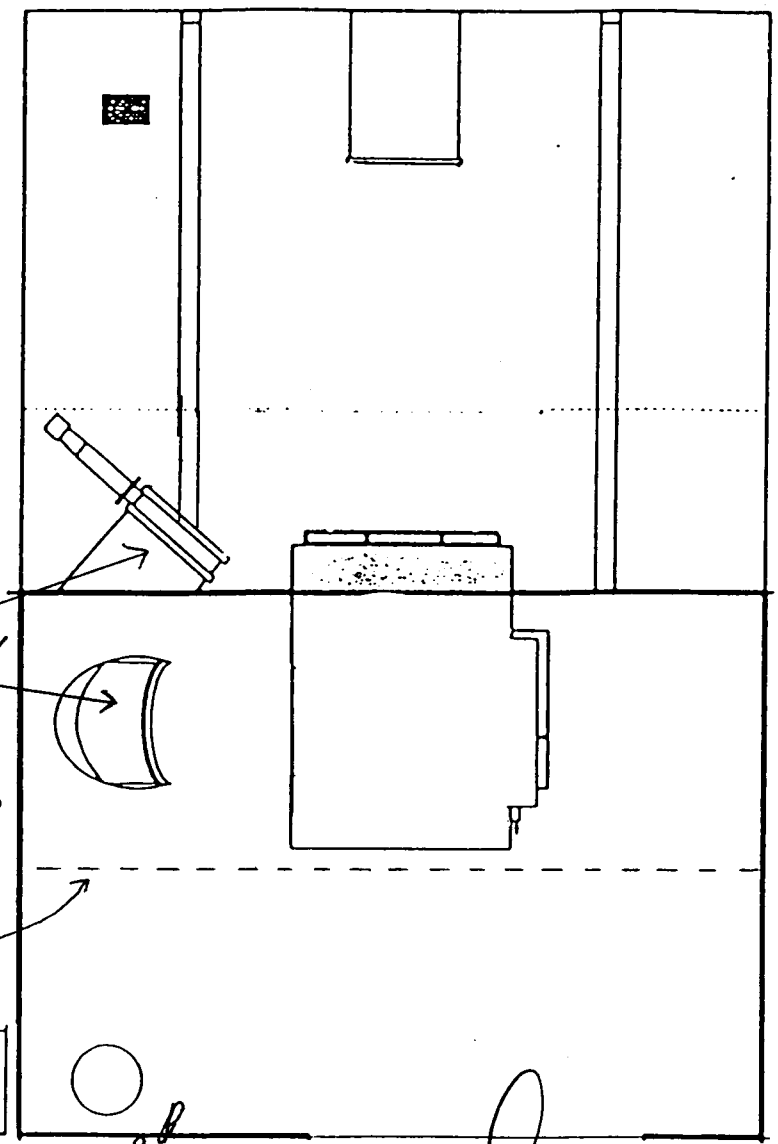

SMEARS 1 THRU 20 TAKEN IN BIG VALVE

POSTED: CONTAMINATION AREA RWP REQUIRED

N

BGRR

REVIEWED BY: [signature] X-900 2/9/00 Signature/date

REVIEWED BY: Dorian Mergen 2/10/2K Signature/date

Activity Report

FAN #2 ON BIG VALVE

Batch Name:	465	**Acquisition Date:**	2/8/00
Batch ID:	Wipe Samples - 200002081734	**Acquisition Time: (minutes)**	2.0
Group:	G		
Device:	HWM Unit 1	**Operating Voltage: (volts)**	1,350.0
Selected Geometry:	1/8" Stainless Steel		

Efficiency Factors

Alpha Efficiency: (%)	0.30	±	0.00	**Beta Efficiency: (%)**	0.17	±	0.12

Sample ID	Quantity	Alpha (DPM)	2σ	Alpha MDA (DPM)	Beta Activity (DPM)	2σ	Beta MDA (DPM)
20000208173450-G~~51~~ 1	0.00	-0.44	0.54	7.41	16.87	19.84	22.03
20000208191530-G~~52~~ 2	0.00	-0.44	0.54	7.41	25.44	25.52	22.03
20000208191740-G~~53~~ 3	0.00	-0.44	0.54	7.41	39.74	34.99	22.03
20000208191951-G~~54~~ 4	0.00	-0.44	0.54	7.41	71.18	55.85	22.03
20000208192201-G~~55~~ 5	0.00	-0.44	0.54	7.41	62.60	50.16	22.03
20000208192411-G~~56~~ 6	0.00	-0.44	0.54	7.41	19.73	21.73	22.03
20000208192621-G~~57~~ 7	0.00	-0.44	0.54	7.41	36.88	33.10	22.03
20000208192831-G~~58~~ 8	0.00	-0.44	0.54	7.41	51.17	42.58	22.03
20000208193042-G~~59~~ 9	0.00	2.86	4.70	7.41	22.55	23.61	22.03
20000208193252-G~~60~~ 10	0.00	-0.44	0.54	7.41	68.32	53.95	22.03
20000208193502-G~~61~~ 11	0.00	-0.44	0.54	7.41	59.74	48.26	22.03
20000208193712-G~~62~~ 12	0.00	-0.44	0.54	7.41	22.59	23.63	22.03
20000208193922-G~~63~~ 13	0.00	1.21	3.35	7.41	68.30	53.94	22.03
20000208194133-G~~64~~ 14	0.00	-0.44	0.54	7.41	39.74	34.99	22.03
20000208194343-G~~65~~ 15	0.00	1.21	3.35	7.41	62.58	50.15	22.03
20000208194553-G~~66~~ 16	0.00	-0.44	0.54	7.41	71.18	55.85	22.03
20000208194803-G~~67~~ 17	0.00	-0.44	0.54	7.41	65.46	52.06	22.03
20000208195014-G~~68~~ 18	0.00	1.21	3.35	7.41	31.14	29.30	22.03
20000208195224-G~~69~~ 19	0.00	-0.44	0.54	7.41	28.30	27.41	22.03
20000208195434-G~~70~~ 20	0.00	-0.44	0.54	7.41	56.89	46.37	22.03

Reviewed by: Doria Meyer

REASON FOR SURVEY

BLDG #: 704 LOCATION: Primary Fan Room # 2 DATE/TIME: 1/26/00 0900 ROUTINE ☐ SPECIAL ☐ RWP #: 00BGRR-04

INSTRUMENTS. MODEL / SERIAL #: LB-5100 26249 3-12-00

DOSE RATES (HIGHEST)		AIRBORNE CONTAMINATION		
CONTACT	NA	TIME	µCi/cc	%DAC
GENERAL AREA	NA	NA	NA	NA

LEGEND: O SMEAR SURVEY LOCATION ☐ MASSLINN SURVEY LOCATION

XXX Y / ZZZ — XXX - CONTACT READING; ZZZ - READING @ 30 Cm; Y - RADIATION TYPE

SMEAR SURVEY RESULTS (DPM/100 cm²) ³H (B-γ) (α)				MASSLINN SURVEY RESULTS (DPM/LAS)	
1. SEE ATTACHED	8. SEE ATTACHED	15. SEE ATTACHED	22. SEE ATTACHED	1. NA	8. NA
2.	9.	16.	23.	2.	9.
3.	10.	17.	24.	3.	10.
4.	11.	18.	25.	4.	11.
5.	12.	19.	26.	5.	12.
6.	13.	20.	27.	6.	13.
7.	14.	21.	28.	7.	14.

BROOKHAVEN GRAPHITE RESEARCH REACTOR
CHARACTERIZATION SURVEY MAP

SURVEY OF FAN ROOM #2 PEDASTAL WALLS AND LEFT AND RIGHT WALLS PRIOR TO REGRESSING ROPES.

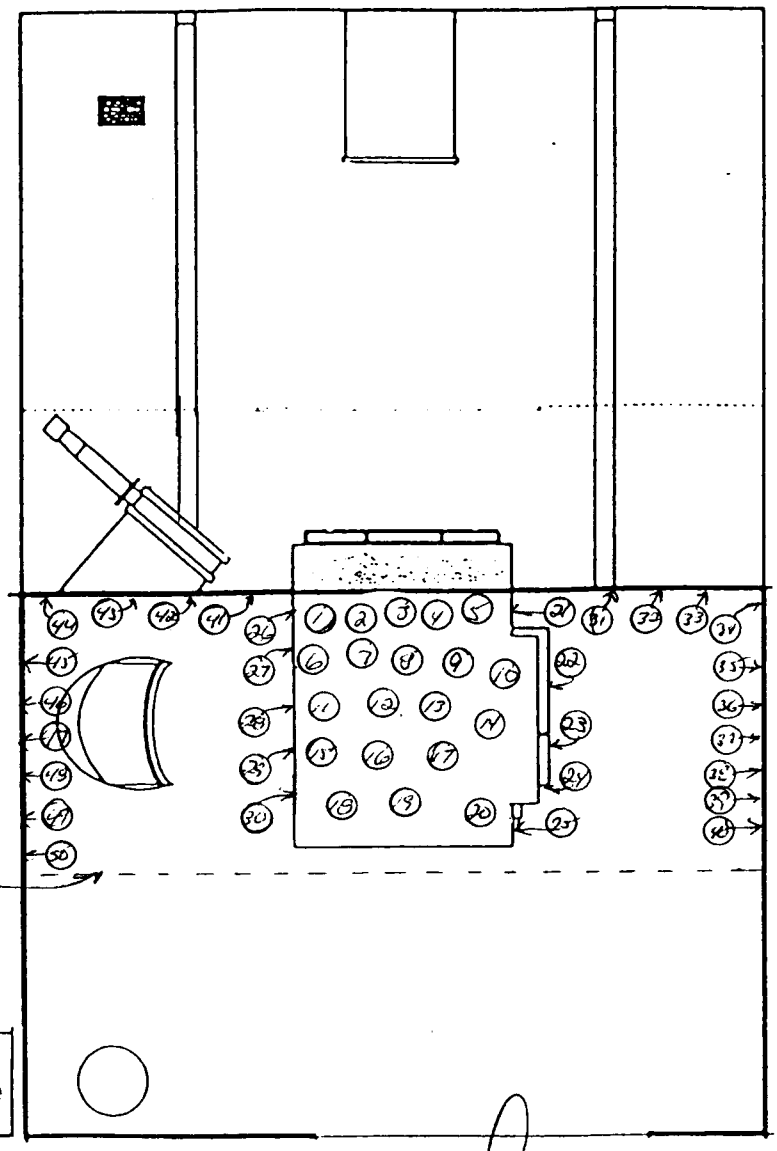

POSTED CONTAMINATION AREA RWP REQUIRED

SURVEYED BY: [signature] 1-9-00 Signature/date

REVIEWED BY: Dorian Meyer 2/10/2K Signature/date

Activity Report

FAN#2 PEDASTAL TOP

Batch Name:	466	**Acquisition Date:**	2/8/00
Batch ID:	Wipe Samples - 200002081750	**Acquisition Time: (minutes)**	2.0
Group:	I		
Device:	HWM Unit 1	**Operating Voltage: (volts)**	1,350.0
Selected Geometry:	1/8" Stainless Steel		

Efficiency Factors

Alpha Efficiency: (%)	0.30	±	0.00	**Beta Efficiency: (%)**	0.17	±	0.12

Sample ID	Quantity	Alpha (DPM)	2σ	Alpha MDA (DPM)	Beta Activity (DPM)	2σ	Beta MDA (DPM)
20000208175102-I~~77~~ 1	0.00	-0.44	0.54	7.41	74.04	57.74	22.03
20000208195855-I~~78~~ 2	0.00	1.21	3.35	7.41	19.71	21.72	22.03
20000208200105-I~~79~~ 3	0.00	-0.44	0.54	7.41	36.88	33.10	22.03
20000208200315-I~~80~~ 4	0.00	-0.44	0.54	7.41	5.44	12.27	22.03
20000208200525-I~~73~~ 5	0.00	-0.44	0.54	7.41	42.59	36.89	22.03
20000208200736-I~~74~~ 6	0.00	1.21	3.35	7.41	31.14	29.30	22.03
20000208200946-I~~75~~ 7	0.00	1.21	3.35	7.41	34.00	31.20	22.03
20000208201156-I~~76~~ 8	0.00	-0.44	0.54	7.41	42.59	36.89	22.03
20000208201406-I~~71~~ 9	0.00	1.21	3.35	7.41	31.14	29.30	22.03
20000208201617-I~~72~~ 10	0.00	1.21	3.35	7.41	22.57	23.62	22.03
20000208201827-I~~87~~ 11	0.00	-0.44	0.54	7.41	5.44	12.27	22.03
20000208202037-I~~88~~ 12	0.00	1.21	3.35	7.41	42.58	36.88	22.03
20000208202247-I~~89~~ 13	0.00	-0.45	0.55	7.41	254.11	177.20	22.03
20000208202457-I~~84~~ 14	0.00	-0.44	0.54	7.41	82.61	63.43	22.03
20000208202708-I~~85~~ 15	0.00	-0.45	0.54	7.41	134.06	97.56	22.03
20000208202918-I~~86~~ 16	0.00	-0.44	0.54	7.41	8.29	14.16	22.03
20000208203129-I~~81~~ 17	0.00	2.86	4.70	7.41	51.13	42.56	22.03
20000208203338-I~~82~~ 18	0.00	12.71	9.37	7.41	1,305.85	874.91	22.03
20000208203548-I~~83~~ 19	0.00	1.21	3.35	7.41	22.57	23.62	22.03
20000208203759-I~~90~~ 20	0.00	-0.44	0.54	7.41	65.46	52.06	22.03

Reviewed by: Doron Meyer

Activity Report

FAN #2 RIGHT WALL PED WALL

Batch Name:	458	**Acquisition Date:**	2/8/00
Batch ID:	Wipe Samples - 200002081441	**Acquisition Time: (minutes)**	2.0
Group:	E		
Device:	HWM Unit 1	**Operating Voltage: (volts)**	1,350.0

Selected Geometry: 1/8" Stainless Steel

Efficiency Factors

Alpha Efficiency: (%)	0.30	±	0.00	**Beta Efficiency: (%)**	0.17	±	0.12

Sample ID		Quantity	Alpha (DPM)	2σ	Alpha MDA (DPM)	Beta Activity (DPM)	2σ	Beta MDA (DPM)
20000208144120-E21		0.00	1.21	3.35	7.41	19.71	21.72	22.03
20000208151223-E22		0.00	-0.44	0.54	7.41	22.59	23.63	22.03
20000208151434-E23		0.00	-0.44	0.54	7.41	25.44	25.52	22.03
20000208151644-E24		0.00	-0.44	0.54	7.41	11.15	16.05	22.03
20000208151854-E25	PED	0.00	1.21	3.35	7.41	8.28	14.16	22.03
20000208152104-E26	LWALL	0.00	-0.44	0.54	7.41	14.01	17.94	22.03
20000208152314-E27		0.00	1.21	3.35	7.41	51.15	42.57	22.03
20000208152525-E28		0.00	-0.44	0.54	7.41	22.59	23.63	22.03
20000208152735-E29		0.00	1.21	3.35	7.41	25.43	25.51	22.03
20000208152945-E30		0.00	-0.44	0.54	7.41	2.58	10.38	22.03
20000208153156-E31		0.00	-0.44	0.54	7.41	71.18	55.85	22.03
20000208153406-E32		0.00	-0.44	0.54	7.41	48.31	40.68	22.03
20000208153616-E33		0.00	1.21	3.35	7.41	25.43	25.51	22.03
20000208153826-E34	RWALL	0.00	1.21	3.35	7.41	25.43	25.51	22.03
20000208154036-E35	LWALL	0.00	-0.44	0.54	7.41	25.44	25.52	22.03
20000208154246-E36		0.00	-0.44	0.54	7.41	19.73	21.73	22.03
20000208154457-E37		0.00	-0.44	0.54	7.41	36.88	33.10	22.03
20000208154707-E38		0.00	-0.44	0.54	7.41	22.59	23.63	22.03
20000208154917-E39		0.00	2.86	4.70	7.41	31.12	29.29	22.03
20000208155127-E40		0.00	-0.44	0.54	7.41	11.15	16.05	22.03

Reviewed by: Darion Morgan

Activity Report

FAN #2 LEFT SIDE WALL

Batch Name:	464	**Acquisition Date:**	2/8/00
Batch ID:	Wipe Samples - 200002081732	**Acquisition Time: (minutes)**	2.0
Group:	F		
Device:	HWM Unit 1	**Operating Voltage: (volts)**	1,350.0
Selected Geometry:	1/8" Stainless Steel		

Efficiency Factors

Alpha Efficiency: (%)	0.30	±	0.00	**Beta Efficiency: (%)**	0.17	±	0.12

Sample ID	Quantity	Alpha (DPM)	2σ	Alpha MDA (DPM)	Beta Activity (DPM)	2σ	Beta MDA (DPM)
20000208173208-F~~41~~ 41	0.00	-0.44	0.54	7.41	22.59	23.63	22.03
20000208185346-F~~42~~ 42	0.00	-0.44	0.54	7.41	22.59	23.63	22.03
20000208185557-F~~43~~ 43	0.00	-0.44	0.54	7.41	19.73	21.73	22.03
20000208185807-F~~44~~ 44	0.00	-0.44	0.54	7.41	2.58	10.38	22.03
20000208190017-F~~45~~ 45	0.00	-0.44	0.54	7.41	19.73	21.73	22.03
20000208190227-F~~46~~ 46	0.00	1.21	3.35	7.41	39.72	34.99	22.03
20000208190438-F~~47~~ 47	0.00	-0.45	0.54	7.41	145.50	105.14	22.03
20000208190648-F~~48~~ 48	0.00	1.21	3.35	7.41	48.29	40.67	22.03
20000208190858-F~~49~~ 49	0.00	-0.44	0.54	7.41	31.16	29.31	22.03
20000208191108-F~~50~~ 50	0.00	-0.44	0.54	7.41	5.44	12.27	22.03

Reviewed by: Dorian Mergen

REASON FOR SURVEY

BLDG #: 704 LOCATION: Primary Fan Room # 2 DATE/TIME: 1/26/00 1000 ROUTINE SPECIAL RWP #: 00-BGRR-04

INSTRUMENTS. MODEL / SERIAL #: LB-5100 26249 3-12-00

DOSE RATES (HIGHEST)		AIRBORNE CONTAMINATION		
CONTACT	NA	TIME	uCi/cc	%DAC
GENERAL AREA	NA	NA	NA	NA

LEGEND: O SMEAR SURVEY LOCATION O MASSLINN SURVEY LOCATION

XXX Y
ZZZ

XXX - CONTACT READING
ZZZ - READING @ 30 Cm

Y - RADIATION TYPE

SMEAR SURVEY RESULTS (DPM/100 cm²) ³H (B-γ) (α)				MASSLINN SURVEY RESULTS (DPM/LAS)	
1. SEE ATTACHED	8. SEE ATTACHED	15. SEE ATTACHED	22. SEE ATTACHED	1. NA	8. NA
2.	9.	16.	23.	2.	9.
3.	10.	17.	24.	3.	10.
4.	11.	18.	25.	4.	11.
5.	12.	19.	26.	5.	12.
6.	13.	20.	27.	6.	13.
7.	14.	21.	28.	7.	14.

BROOKHAVEN GRAPHITE RESEARCH REACTOR
CHARACTERIZATION SURVEY MAP

SURVEY OF FAN HOUSE #2 FLOOR PRIOR TO REGRESSING ROPES.

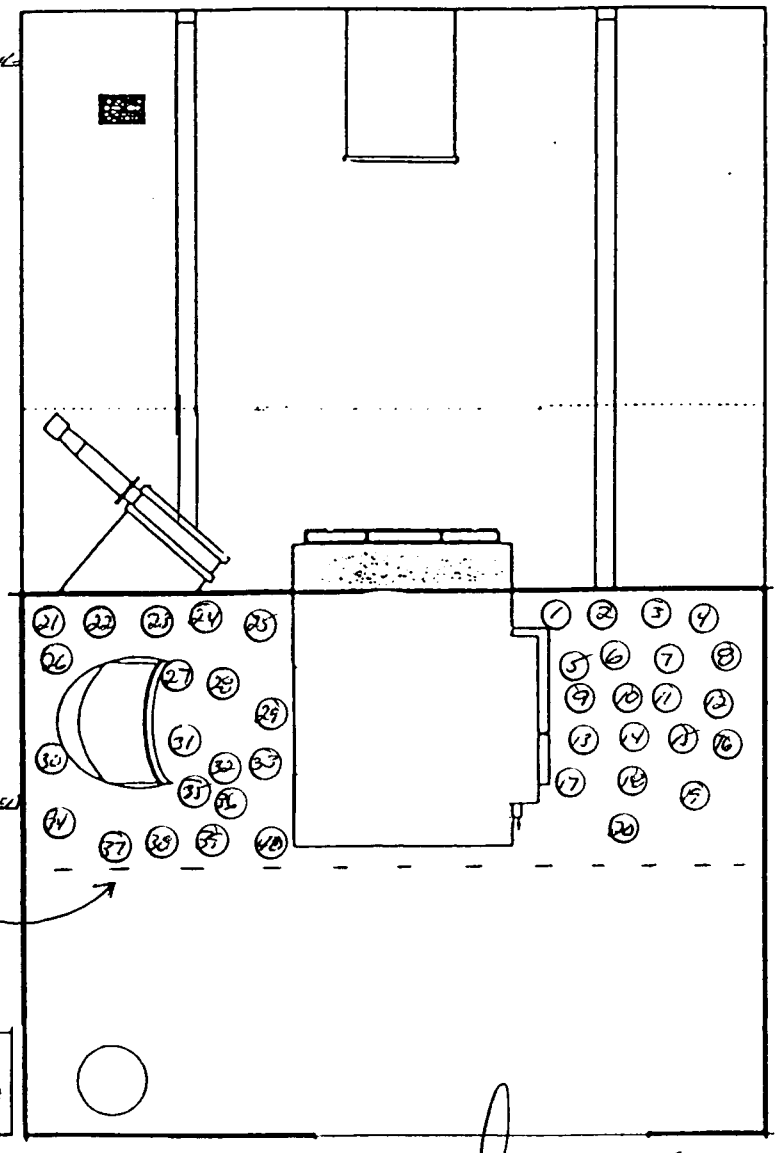

POSTED: CA RWP REQUIRED

BGRR

SURVEYED BY: [signature] 2-9-00
Signature/date

REVIEWED BY: Dorian Mergel 2/10/2K
Signature/date

Activity Report

4/SBE

2/8/00
3:13:18PM

FAN HOUSE2 RIHGT SIDE FLOOR

Batch Name:	453	**Acquisition Date:**	2/8/00
Batch ID:	Wipe Samples - 200002081426	**Acquisition Time: (minutes)**	2.0
Group:	D		
Device:	HWM Unit 1	**Operating Voltage: (volts)**	1,350.0
Selected Geometry:	1/8" Stainless Steel		

Efficiency Factors

Alpha Efficiency: (%)	0.30	±	0.00	**Beta Efficiency: (%)**	0.17	±	0.12

Sample ID	Quantity	Alpha (DPM)	2σ	Alpha MDA (DPM)	Beta Activity (DPM)	2σ	Beta MDA (DPM)
20000208142630-D1	0.00	-0.44	0.54	7.41	8.29	14.16	22.03
20000208142901-D2	0.00	-0.44	0.54	7.41	16.87	19.84	22.03
20000208143111-D3	0.00	-0.44	0.54	7.41	8.29	14.16	22.03
20000208143321-D4	0.00	1.21	3.35	7.41	31.14	29.30	22.03
20000208143531-D5	0.00	-0.44	0.54	7.41	31.16	29.31	22.03
20000208143741-D6	0.00	2.86	4.70	7.41	25.41	25.50	22.03
20000208143952-D7	0.00	-0.44	0.54	7.41	16.87	19.84	22.03
20000208144202-D8	0.00	-0.44	0.54	7.41	31.16	29.31	22.03
20000208144412-D9	0.00	-0.44	0.54	7.41	39.74	34.99	22.03
20000208144622-D10	0.00	-0.44	0.54	7.41	45.45	38.79	22.03
20000208144832-D11	0.00	-0.44	0.54	7.41	16.87	19.84	22.03
20000208145043-D12	0.00	2.86	4.70	7.41	39.70	34.98	22.03
20000208145253-D13	0.00	-0.44	0.54	7.41	45.45	38.79	22.03
20000208145503-D14	0.00	-0.44	0.54	7.41	48.31	40.68	22.03
20000208145713-D15	0.00	-0.44	0.54	7.41	45.45	38.79	22.03
20000208145924-D16	0.00	-0.44	0.54	7.41	42.59	36.89	22.03
20000208150134-D17	0.00	-0.44	0.54	7.41	39.74	34.99	22.03
20000208150344-D18	0.00	-0.45	0.54	7.41	94.05	71.01	22.03
20000208150554-D19	0.00	-0.44	0.54	7.41	65.46	52.06	22.03
20000208150804-D20	0.00	1.21	3.35	7.41	22.57	23.62	22.03

Reviewed by: Dorian Morgan

Activity Report

5:24:01PM

FAN#2 LEFT SIDE FLOOR

Batch Name:	460	**Acquisition Date:**	2/8/00
Batch ID:	Wipe Samples - 200002081458	**Acquisition Time: (minutes)**	2.0
Group:	F		
Device:	HWM Unit 1	**Operating Voltage: (volts)**	1,350.0
Selected Geometry:	1/8" Stainless Steel		

Efficiency Factors

Alpha Efficiency: (%)	0.30	±	0.00	**Beta Efficiency: (%)**	0.17	±	0.12

Sample ID	Quantity	Alpha (DPM)	2σ	Alpha MDA (DPM)	Beta Activity (DPM)	2σ	Beta MDA (DPM)
20000208145807-F41 21	0.00	-0.44	0.54	7.41	31.16	29.31	22.03
20000208155553-F42 22	0.00	-0.44	0.54	7.41	28.30	27.41	22.03
20000208155804-F43 23	0.00	1.21	3.35	7.41	13.99	17.94	22.03
20000208160014-F44 24	0.00	-0.44	0.54	7.41	51.17	42.58	22.03
20000208160224-F45 25	0.00	-0.45	0.54	7.41	134.06	97.56	22.03
20000208160434-F46 26	0.00	-0.44	0.54	7.41	45.45	38.79	22.03
20000208160644-F47 27	0.00	1.21	3.35	7.41	48.29	40.67	22.03
20000208160855-F48 28	0.00	-0.44	0.54	7.41	5.44	12.27	22.03
20000208161105-F49 29	0.00	1.21	3.35	7.41	119.75	88.07	22.03
20000208161315-F50 30	0.00	-0.44	0.54	7.41	34.02	31.20	22.03
20000208161525-F51 31	0.00	-0.44	0.54	7.41	51.17	42.58	22.03
20000208161735-F52 32	0.00	-0.44	0.54	7.41	65.46	52.06	22.03
20000208161946-F53 33	0.00	-0.44	0.54	7.41	65.46	52.06	22.03
20000208162156-F54 34	0.00	1.19	3.35	7.41	417.02	285.27	22.03
20000208162406-F55 35	0.00	-0.46	0.55	7.41	294.13	203.75	22.03
20000208162616-F56 36	0.00	1.20	3.35	7.41	136.90	99.44	22.03
20000208162827-F57 37	0.00	-0.45	0.54	7.41	108.34	80.49	22.03
20000208163037-F58 38	0.00	-0.45	0.54	7.41	125.49	91.87	22.03
20000208163247-F59 39	0.00	-0.44	0.54	7.41	59.74	48.26	22.03
20000208163457-F60 40	0.00	-0.45	0.54	7.41	168.36	120.31	22.03

Reviewed by: Dorian Morgan

BNL RADIOLOGICAL SURVEY FORM

REASON FOR SURVEY ☐ ROUTINE ☒ SPECIAL

BLDG #: 704 LOCATION: FAN ROOM #3 DATE/TIME: 2/16/00 1400 RWP #: BGRL 04

INSTRUMENTS, MODEL / SERIAL #: LB5100 092296 2-11-01

DOSE RATES (HIGHEST)		AIRBORNE CONTAMINATION		
CONTACT	NA	TIME	nCi/cc	%DAC
GENERAL AREA	NA	NA	NA	NA

LEGEND: O SMEAR SURVEY LOCATION ○ MASSLINN SURVEY LOCATION

XXX Y / ZZZ — XXX - CONTACT READING; ZZZ - READING @ 30 Cm; Y - RADIATION TYPE

SMEAR SURVEY RESULTS (DPM/100 cm²) ³H (B-γ) (α)

1.	SEE ATTACHED	8.	SEE ATTACHED	15.	NA	22.	NA
2.		9.		16.		23.	
3.		10.		17.		24.	
4.		11.	NA	18.		25.	
5.		12.		19.		26.	
6.		13.		20.		27.	
7.		14.		21.		28.	

MASSLINN SURVEY RESULTS (DPM/

1.	NA	8.	NA
2.		9.	
3.		10.	
4.		11.	
5.		12.	
6.		13.	
7.		14.	

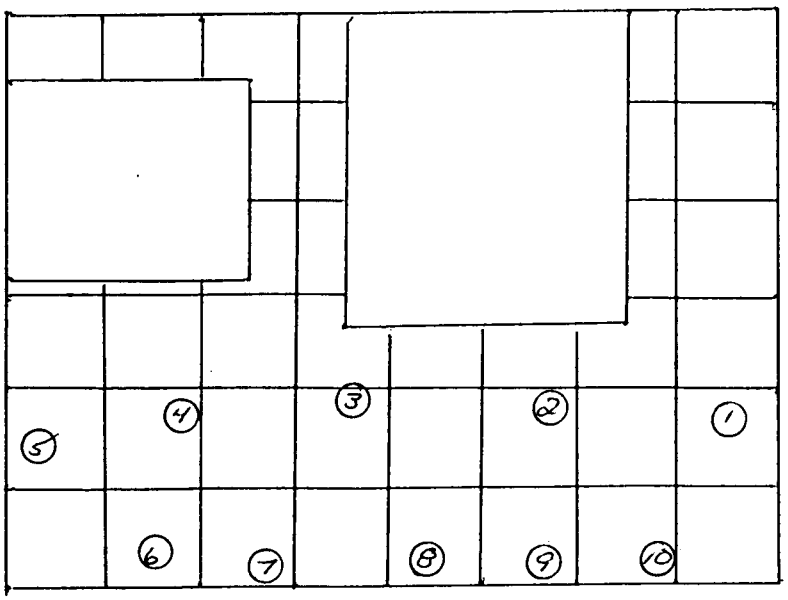

SURVEYED BY: [signature] Signature/date 2/17/00 0800

REVIEWED BY: Dorion Meryen 3/8/2K Signature/date

Form FS-1000 1 FS-SOP-1000 rev 1 attch 8.2 page 11 File Code

Activity Report

FAN #3 CLEAN SIDE OF FLOOR

Batch Name:	64	**Acquisition Date:**	2/16/00
Batch ID:	Wipes Sample Counts - 200002161423	**Acquisition Time: (minutes)**	1.0
Group:	A		
Device:	LASP	**Operating Voltage: (volts)**	1,290.0
Selected Geometry:	1/8" Stainless Steel		

Efficiency Factors

Alpha Efficiency: (%)	0.31	±	0.00	**Beta Efficiency: (%)**	0.19	±	0.00

Sample ID	Quantity	Alpha (DPM)	2σ	Alpha MDA (DPM)	Beta Activity (DPM)	2σ	Beta MDA (DPM)
20000216142315-A1	0.00	1.77	6.56	16.12	35.58	29.42	32.34
20000216142445-A2	0.00	-1.47	0.97	16.12	20.35	23.30	32.34
20000216142606-A3	0.00	-1.47	0.97	16.12	15.17	20.87	32.34
20000216142716-A4	0.00	-1.47	0.97	16.12	20.35	23.30	32.34
20000216142836-A5	0.00	-1.47	0.97	16.12	15.17	20.87	32.34
20000216142946-A6	0.00	-1.47	0.97	16.12	35.89	29.41	32.34
20000216143106-A7	0.00	-1.47	0.97	16.12	15.17	20.87	32.34
20000216143217-A8	0.00	-1.47	0.97	16.12	15.17	20.87	32.34
20000216143337-A9	0.00	-1.47	0.97	16.12	15.17	20.87	32.34
20000216143447-A10	0.00	-1.46	0.97	16.12	9.99	18.11	32.34

Reviewed by: Dorian Morgan

REASON FOR SURVEY

BLDG #: 704 LOCATION: Primary Fan Room #3 DATE/TIME: 1330 / 2-11-00 ROUTINE SPECIAL RWP #: 00BGRR04

INSTRUMENTS, MODEL / SERIAL #: MODEL 3 50545 9-8-00

DOSE RATES (HIGHEST)		AIRBORNE CONTAMINATION		
CONTACT	N/A	TIME	µCi/cc	%DAC
GENERAL AREA	<.2			

LEGEND: O SMEAR SURVEY LOCATION □ MASSLINN SURVEY LOCATION

XXX Y / ZZZ — XXX - CONTACT READING; ZZZ - READING @ 30 Cm; Y - RADIATION TYPE

SMEAR SURVEY RESULTS (DPM/100 cm²) ³H B-γ α

1.		8.		15.		22.	
2.		9.		16.		23.	
3.		10.		17.		24.	
4.		11.		18.		25.	
5.		12.		19.		26.	
6.		13.		20.		27.	
7.		14.		21.		28.	

N/A N/A N/A

MASSLINN SURVEY RESULTS (DPM/LAS)

1.	<1	8.	
2.	<1	9.	
3.	<1	10.	
4.	<1	11.	
5.	<1	12.	
6.	<1	13.	
7.	<1	14.	

NOTE:
MASSLINN
BEFORE DIRECT FRISK

BROOKHAVEN GRAPHITE RESEARCH REACTOR
CHARACTERIZATION SURVEY MAP

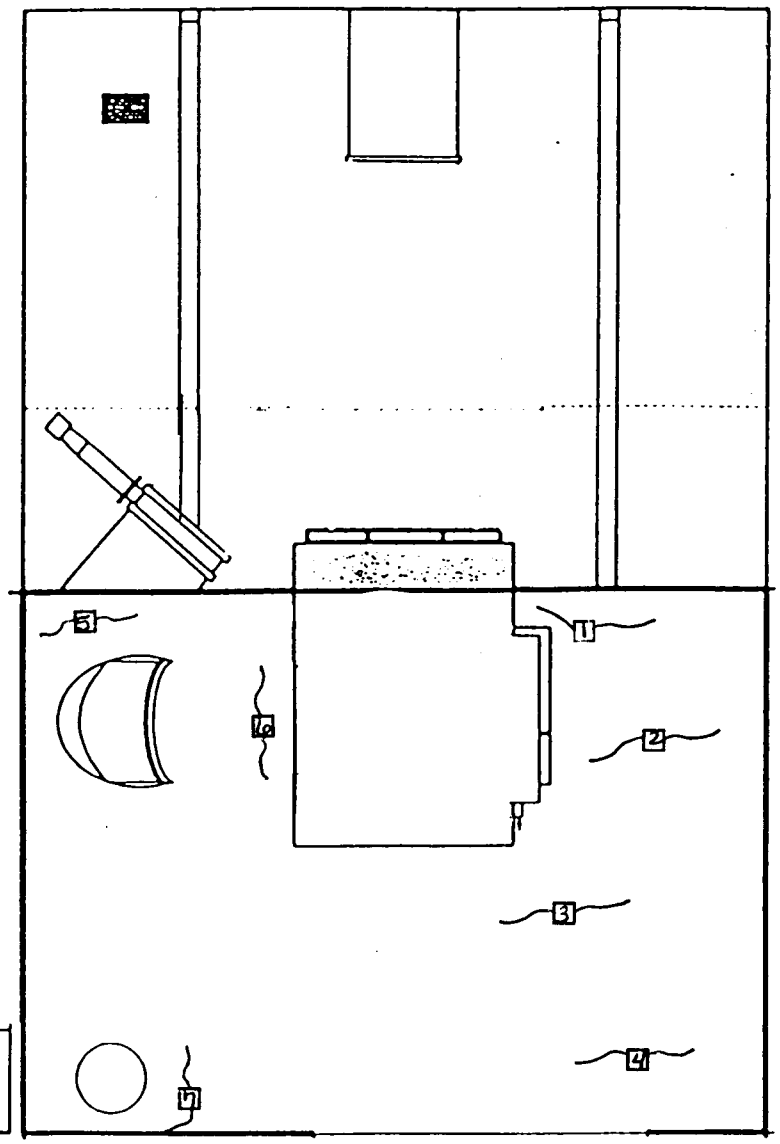

N

BGRR

RVEYED BY: [signature] 2-11-00 REVIEWED BY: [signature] 2/16/00

Signature/date Signature/date

m ES-1000-1 ES-SOP-1000 rev 1, attch 8.2, page 11 File Code: HP3120

BNL RADIOLOGICAL SURVEY FORM

REASON FOR SURVEY ☐ ROUTINE ☑ SPECIAL

LDG #: 704 LOCATION: Primary FAN Room #3 DATE/TIME: 2-11-00 14:00 RWP #: 00-1[illegible]-04

STRUMENTS. MODEL / SERIAL #: MODEL 3 50545 9-8-00

DOSE RATES (HIGHEST)		AIRBORNE CONTAMINATION		
		TIME	uCi/cc	%DAC
CONTACT	N/A			
GENERAL AREA				

LEGEND: O SMEAR SURVEY LOCATION ▫ MASSLINN SURVEY LOCATION

XXX Y / ZZZ — XXX = CONTACT READING; ZZZ = READING @ 30 Cm; Y = RADIATION TYPE

SMEAR SURVEY RESULTS (DPM/100 cm²) ³H B-γ α

1.		8.		15.		22.					
2.		9.		16.		23.					
3.		10.		17.		24.					
4.		11.		18.		25.					
5.		12.		19.		26.					
6.		13.		20.		27.					
7.		14.		21.		28.					

N/A

MASSLINN SURVEY RESULTS (DPM/LAS)

1.		8.	
2.		9.	
3.		10.	
4.		11.	
5.		12.	
6.		13.	
7.		14.	

N/A

SOUTH WALL

1 - 3K FIXED
2 - 1K FIXED
3 - 3K FIXED
4 - 1K FIXED
5 - 2K FIXED
6 - 1 K FIXED

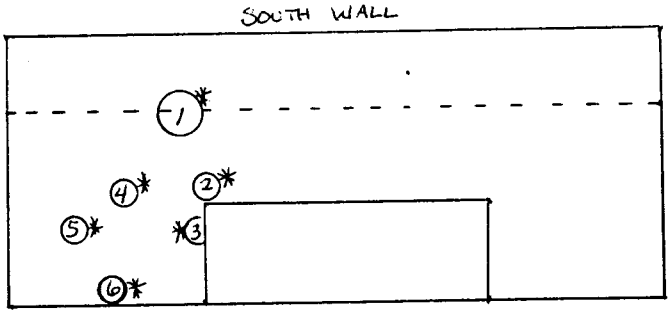

WEST WALL

1 - 3K FIXED
2 - 3K FIXED
3 - 3K FIXED
4 - 1K FIXED
5 - 10K FIXED
6 - 20K IN CRACK BETWEEN WALL AND FLOOR

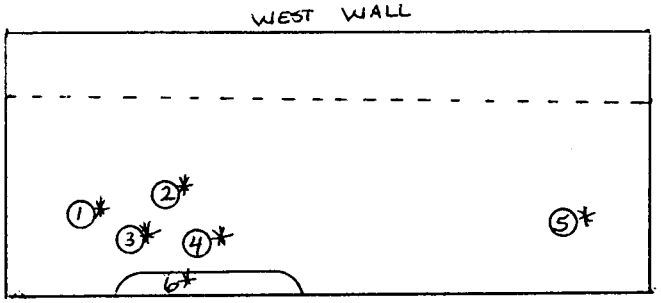

NORTH WALL (WEST OF ROLL UP DOOR)

1 - 3K FIXED

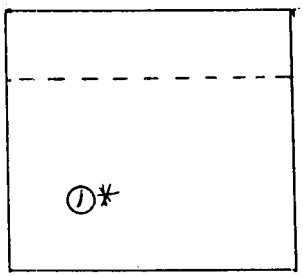

NOTE: * DENOTES DIRECT FRISK READING
— EAST WALL LESS THAN BACKGROUND
ALL READINGS IN NCPM.

SURVEYED BY: [signature] 2-11-00
Signature/date

REVIEWED BY: [signature] 2/16/00
Signature/date

BNL RADIOLOGICAL SURVEY FORM

REASON FOR SURVEY ☐ ROUTINE ☒ SPECIAL

LDG #: 704 LOCATION: Primary Fan #3 DATE/TIME: 2/11-00 10:00 RWP #: 00-RGAA-04

STRUMENTS, MODEL / SERIAL #: MODEL #3 50545 9-8-00

DOSE RATES (HIGHEST)		AIRBORNE CONTAMINATION		
CONTACT	NA	TIME	uCi/cc	%DAC
GENERAL AREA	NA	NA	NA	NA

LEGEND: O SMEAR SURVEY LOCATION ☐ MASSLINN SURVEY LOCATION

XXX Y / ZZZ — XXX = CONTACT READING; ZZZ = READING @ 30 Cm; Y = RADIATION TYPE

SMEAR SURVEY RESULTS (DPM/100 cm²) ³H B-γ α

1.		8.		15.		22.					
2.		9.		16.		23.					
3.		10.		17.		24.					
4.	NA	11.	NA	18.	NA	25.	NA				
5.		12.		19.		26.					
6.		13.		20.		27.					
7.		14.		21.		28.					

MASSLINN SURVEY RESULTS (DPM/LAS)

1.	<1K	8.	
2.	<1K	9.	
3.	<1K	10.	
4.		11.	NA
5.		12.	
6.		13.	
7.		14.	

DIRECT FRISK OF PEDASTAL

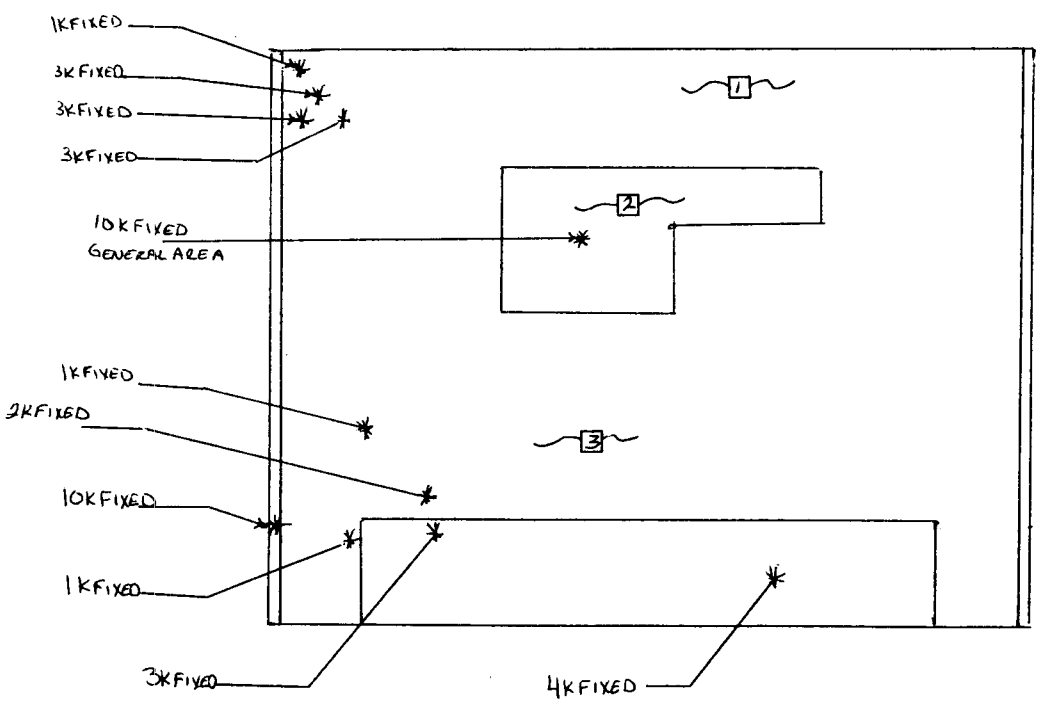

NOTE: ALL READINGS IN NCPM

SURVEYED BY: [signature] 2-11-00 Signature/date

REVIEWED BY: [signature] 2/16/00 Signature/date

BNL RADIOLOGICAL SURVEY FORM

REASON FOR SURVEY: ☐ ROUTINE ☒ SPECIAL

BLDG #: 704 LOCATION: Primary Fan Room #3 DATE/TIME: 2-11-00 RWP #:

INSTRUMENTS, MODEL / SERIAL #: MODEL #3 50545 9-8-00

DOSE RATES (HIGHEST)		AIRBORNE CONTAMINATION		
CONTACT	NA	TIME	uCi/cc	%DAC
GENERAL AREA	NA			

LEGEND: O SMEAR SURVEY LOCATION; ☐ MASSLINN SURVEY LOCATION

XXX Y / ZZZ — XXX = CONTACT READING; ZZZ = READING @ 30 Cm; Y = RADIATION TYPE

SMEAR SURVEY RESULTS (DPM/100 cm²) ³H B-γ α

1.	8.	15.	22.
2.	9.	16.	23.
3.	10.	17.	24.
4. NA	11. NA	18. NA	25. NA
5.	12.	19.	26.
6.	13.	20.	27.
7.	14.	21.	28.

MASSLINN SURVEY RESULTS (DPM/LAS)

1.	8.
2.	9.
3.	10.
4. NA	11. N/A
5.	12.
6.	13.
7.	14.

HIGHEST DIRECT FRISK ON FLOOR READING

1 - 10K
2 - 20K
3 - 5K
4 - 5K
5 - 2K
6 - N/D
7 - 5K
8 - 10K
9 - 5K
10 - ND
11 - N/D
12 - N/D
13 - 1K
14 -
15 -
16 - ND
17 -
18 -
19 - 5K
20 - 2K
21 - 1K
22 - N/D
23 -
24 -
25 - N/D
26 - 3K
27 - 4K
28 - 2K
29 -
30 -
31 - 2K
32 - 5K
33 - ND
34 -
35 -
36 - 2K
37 - 3K
38 - N/D
39 -
40 -

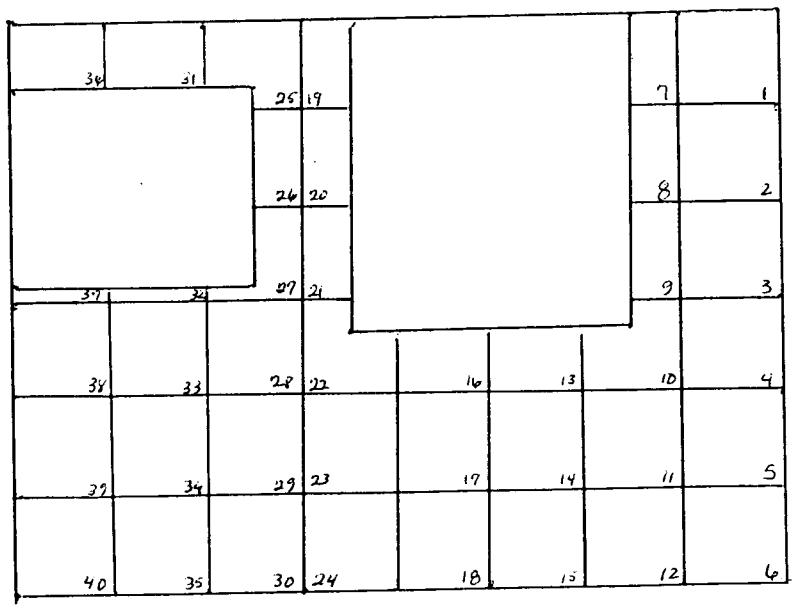

NOTE: ALL READINGS IN NCPM

SURVEYED BY: [signature] 2-11-00 Signature/date

REVIEWED BY: [signature] 2/14/00 Signature/date

Form FS-1000.1 FS-SOP-1000, rev 1 attch 8.2 page 11 File Code: HP31

BNL RADIOLOGICAL SURVEY FORM

REASON FOR SURVEY ☐ ROUTINE ☒ SPECIAL RWP #: 00BERR-04

BLDG #: 704 LOCATION: PRIMARY FAN ROOM # 3 DATE/TIME: 2-11-00 15:00

INSTRUMENTS, MODEL / SERIAL #: MODEL # 3 S0545 / 9-8-00

DOSE RATES (HIGHEST)		AIRBORNE CONTAMINATION		
CONTACT	NA	TIME	uCi/cc	%DAC
GENERAL AREA	NA	NA	NA	NA

LEGEND: O SMEAR SURVEY LOCATION ☐ MASSLINN SURVEY LOCATIO

XXX Y / ZZZ — XXX - CONTACT READING; ZZZ - READING @ 30 Cm; Y - RADIATION TYPE

SMEAR SURVEY RESULTS (DPM/100 cm²) ³H B-γ α

1.	8.	15.	22.
2.	9.	16.	23.
3.	10. NA	17.	24.
4. NA	11.	18. NA	25. NA
5.	12.	19.	26.
6.	13.	20.	27.
7.	14.	21.	28.

MASSLINN SURVEY RESULTS (DP

1. L/K	8.
2. L/K	9.
3.	10.
4.	11.
5.	12.
6. NA	13.
7.	14.

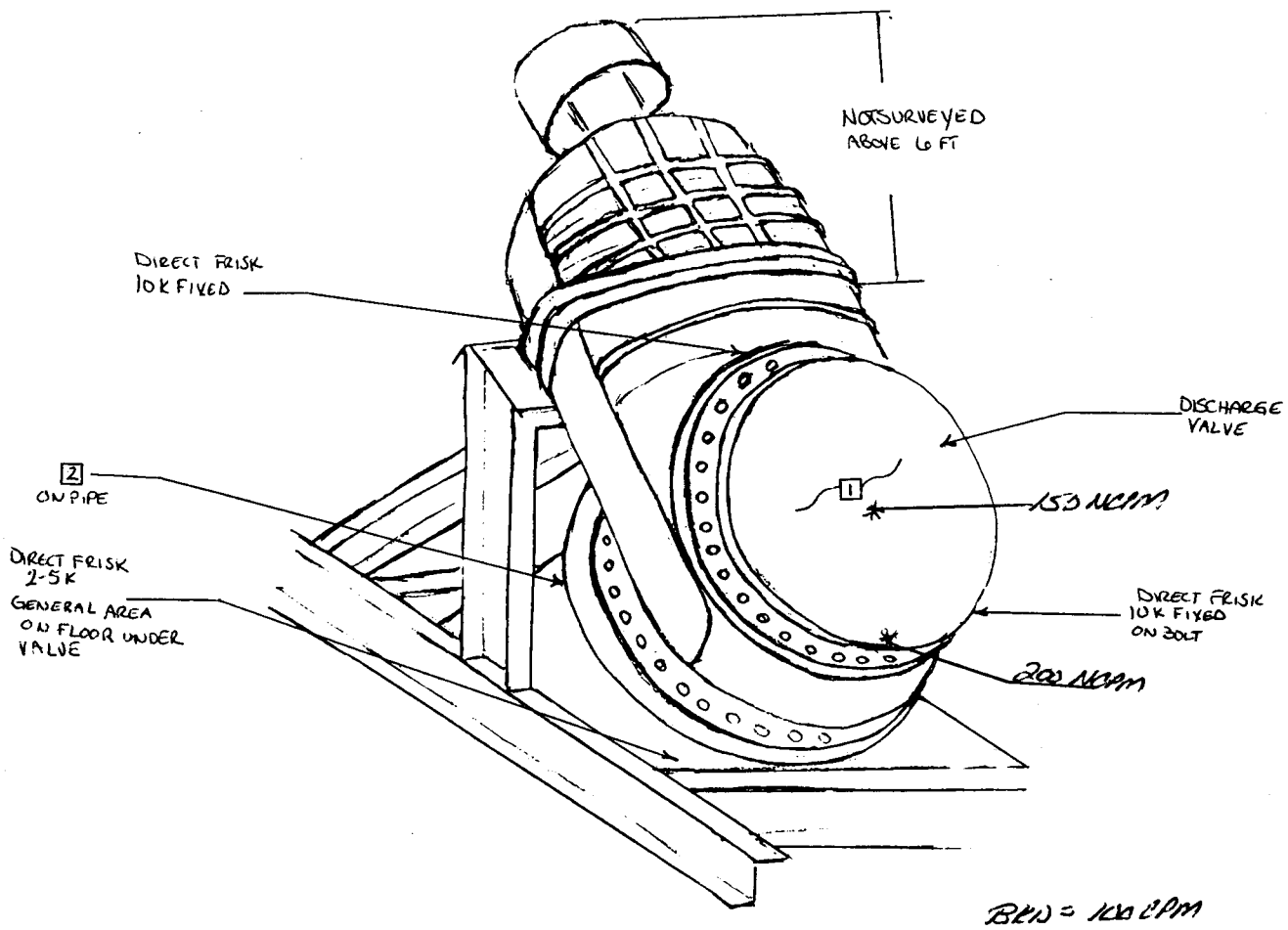

DIRECT FRISK ON DISCHARGE VALVE
<100 KPM UNLESS NOTED
NOTE: ALL READINGS IN NCPM

SURVEYED BY: [signature] 2-11-00 Signature/date

REVIEWED BY: [signature] 2/16/00 Signature/date

File Co

Form FS-1000.1

FS-SOP-1000, rev 1, attch 8.2, page 11

REASON FOR SURVEY

BLDG #: 704 LOCATION: Primary Fan Room #3 DATE/TIME: 1-20-00 1300 ROUTINE ○ SPECIAL ○ RWP #: BGRR-04

INSTRUMENTS. MODEL / SERIAL #: LB-5100 # 092286 2-19-00 / LU-270067 2-19-00

DOSE RATES (HIGHEST)		AIRBORNE CONTAMINATION		
CONTACT	NA	TIME	uCi/cc	% DAC
GENERAL AREA	NA	NA	NA	NA

LEGEND: ○ SMEAR SURVEY LOCATION ○ MASSLINN SURVEY LOCATION

XXX Y
ZZZ

XXX - CONTACT READING
ZZZ - READING @ 30 Cm

Y - RADIATION TYPE

SMEAR SURVEY RESULTS (DPM/100 cm²) ^3H $B-\gamma$ α

1. SEE ATTACHED	8. SEE ATTACHED	15. SEE ATTACHED	22. SEE ATTACHED
2.	9.	16.	23.
3.	10.	17.	24.
4.	11.	18.	25.
5.	12.	19.	26.
6.	13.	20.	27.
7.	14.	21.	28.

MASSLINN SURVEY RESULTS (DPM/LAS)

1. <1k	8. NA
2. <1k	9.
3. NA	10.
4.	11.
5.	12.
6.	13.
7.	14.

BROOKHAVEN GRAPHITE RESEARCH REACTOR
CHARACTERIZATION SURVEY MAP

SURVEY OF FAN ROOM #3
PRIOR TO REGRESSION
CONTAMINATED AREA BOUNDARIES

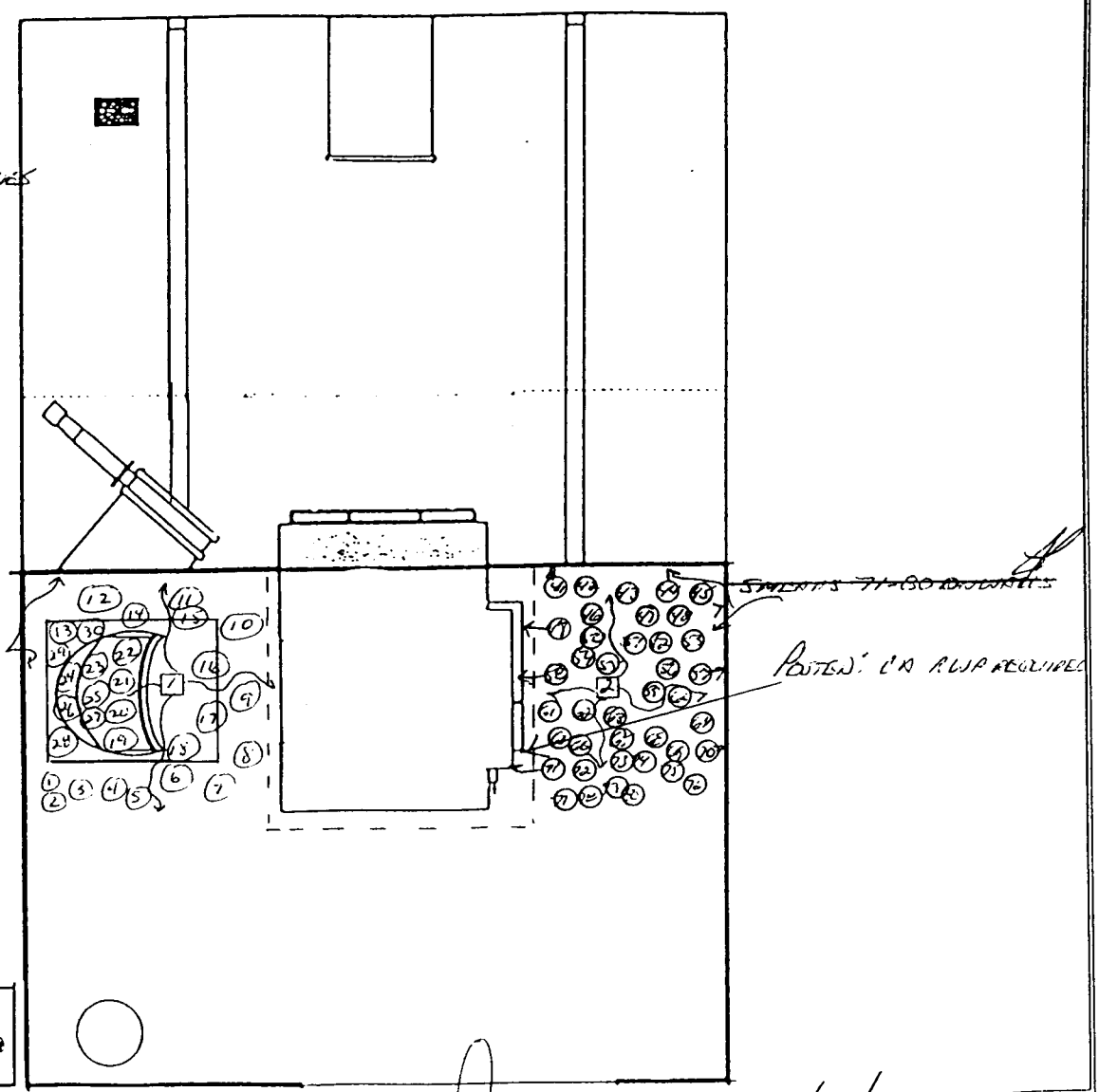

SURVEYED BY: Signature/date 1/20/00 REVIEWED BY: Signature/date 1/26/2K

Activity Report

3:48:32PM

FAN#3 DEPOST LEFT SIDE

Batch Name:	743	**Acquisition Date:**	1/20/00
Batch ID:	Wipe Sample Counrts - 200001201501	**Acquisition Time: (minutes)**	1.0
Group:	A		
Device:	LSAP Unit 1	**Operating Voltage: (volts)**	1,335.0
Selected Geometry:	1/8" Stainless Steel		

Efficiency Factors

Alpha Efficiency: (%)	0.30	±	0.00	**Beta Efficiency: (%)**	0.19	±	0.00

Sample ID	Quantity	Alpha (DPM)	2σ	Alpha MDA (DPM)	Beta Activity (DPM)	2σ	Beta MDA (DPM)
20000120150135-A1	0.00	0.00	0.01	8.89	15.65	18.08	14.12
20000120150306-A2	0.00	0.00	0.01	8.89	20.87	20.87	14.12
20000120150416-A3	0.00	0.00	0.02	8.89	36.53	27.61	14.12
20000120150526-A4	0.00	-0.01	0.04	8.89	67.84	37.63	14.12
20000120150636-A5	0.00	0.00	0.03	8.89	41.75	29.52	14.12
20000120150736-A6	0.00	6.57	9.30	8.89	41.69	29.52	14.12
20000120150846-A7	0.00	0.00	0.01	8.89	15.65	18.08	14.12
20000120150956-A8	0.00	0.00	0.01	8.89	20.87	20.87	14.12
20000120151107-A9	0.00	0.00	0.03	8.89	52.18	33.01	14.12
20000120151217-A10	0.00	-0.01	0.06	8.89	88.71	43.04	14.12
00120151327-A11	0.00	-0.01	0.04	8.89	67.84	37.63	14.12
20000120151437-A12	0.00	0.00	0.02	8.89	31.31	25.57	14.12
20000120151547-A13	0.00	3.28	6.57	8.89	20.84	20.87	14.12
20000120151657-A14	0.00	3.28	6.57	8.89	36.50	27.62	14.12
20000120151807-A95	0.00	0.00	0.02	8.89	31.31	25.57	14.12
20000120151917-A16	0.00	6.57	9.30	8.89	41.69	29.52	14.12
20000120152028-A17	0.00	-0.01	0.07	8.89	109.58	47.84	14.12
20000120152138-A18	0.00	9.86	11.39	8.89	10.35	14.77	14.12
20000120152248-A19	0.00	0.00	0.02	8.89	36.53	27.61	14.12
20000120152358-A20	0.00	0.00	0.02	8.89	36.53	27.61	14.12
20000120152508-A21	0.00	3.28	6.57	8.89	62.59	36.16	14.12
20000120152619-A22	0.00	-0.02	0.12	8.89	182.64	61.76	14.12
20000120152728-A23	0.00	0.00	0.02	8.89	36.53	27.61	14.12
20000120152838-A24	0.00	0.00	0.03	8.89	46.96	31.31	14.12
20000120152948-A25	0.00	3.29	6.57	8.89	15.63	18.08	14.12
20000120153059-A26	0.00	0.00	0.01	8.89	20.87	20.87	14.12
20000120153209-A27	0.00	6.57	9.30	8.89	15.60	18.08	14.12
20000120153319-A28	0.00	0.00	0.02	8.89	26.09	23.34	14.12
20000120153429-A29	0.00	0.00	0.02	8.89	31.31	25.57	14.12
20000120153539-A30	0.00	0.00	0.03	8.89	41.75	29.52	14.12
20000120153649-A31	0.00	0.00	0.00	8.89	5.22	10.44	14.12
20000120153759-A32	0.00	3.29	6.57	8.89	15.63	18.08	14.12
20000120153909-A33	0.00	0.00	0.01	8.89	15.65	18.08	14.12
20000120154020-A34	0.00	0.00	0.01	8.89	20.87	20.87	14.12
90120154130-A35	0.00	0.00	0.01	8.89	15.65	18.08	14.12
20001201542 40-A36	0.00	0.00	0.00	8.89	5.22	10.44	14.12

Activity Report

3:48:32PM

Efficiency Factors

Alpha Efficiency: (%)	0.30	±	0.00	**Beta Efficiency: (%)**	0.19	±	0.00

Sample ID	Quantity	Alpha (DPM)	2σ	Alpha MDA (DPM)	Beta Activity (DPM)	2σ	Beta MDA (DPM)
20000120154350-A37	0.00	0.00	0.01	8.89	15.65	18.08	14.12
20000120154500-A38	0.00	0.00	0.01	8.89	20.87	20.87	14.12
20000120154611-A39	0.00	0.00	0.01	8.89	10.44	14.76	14.12
20000120154721-A40	0.00	0.00	0.03	8.89	41.75	29.52	14.12

Reviewed by: 2/16/00

BNL RADIOLOGICAL SURVEY FORM

REASON FOR SURVEY ☐ ☒

BLDG #: 704 LOCATION: Primary Fan Room #1 DATE/TIME: 2-13-00 1130 ROUTINE SPECIAL RWP #: 0006RR04

INSTRUMENTS, MODEL / SERIAL #: MODEL #3 50545 9-8-00 / Ludlum 177 75655 2-4-01 / LB-5100 09220 2-11-01

DOSE RATES (HIGHEST)		AIRBORNE CONTAMINATION		
CONTACT	NA	TIME	uCi/cc	%DAC
GENERAL AREA	NA	NA	NA	NA

LEGEND: O SMEAR SURVEY LOCATION ☐ MASSLINN SURVEY LOCATION

XXX Y / ZZZ

XXX - CONTACT READING
ZZZ - READING @ 30 Cm

Y - RADIATION TYPE

SMEAR SURVEY RESULTS (DPM/100 cm²) ³H B-γ α

1. SEE ATTACHED	8. SEE ATTACHED	15.	22.
2.	9.	16.	23.
3.	10. SEE ATTACHED	17.	24.
4. NA	11. NA	18. NA	25.
5. SEE ATTACHED	12. NA	19.	26. NA
6.	13.	20.	27.
7.	14.	21.	28.

MASSLINN SURVEY RESULTS (DPM/LAS)

1. LIK	8.
2. LIK	9.
3.	10.
4. NA	11. NA
5.	12.
6.	13.
7.	14.

DIRECT FRISK OF SOUTH WALL <100 cc pm EXCEPT WHERE INDICATED.

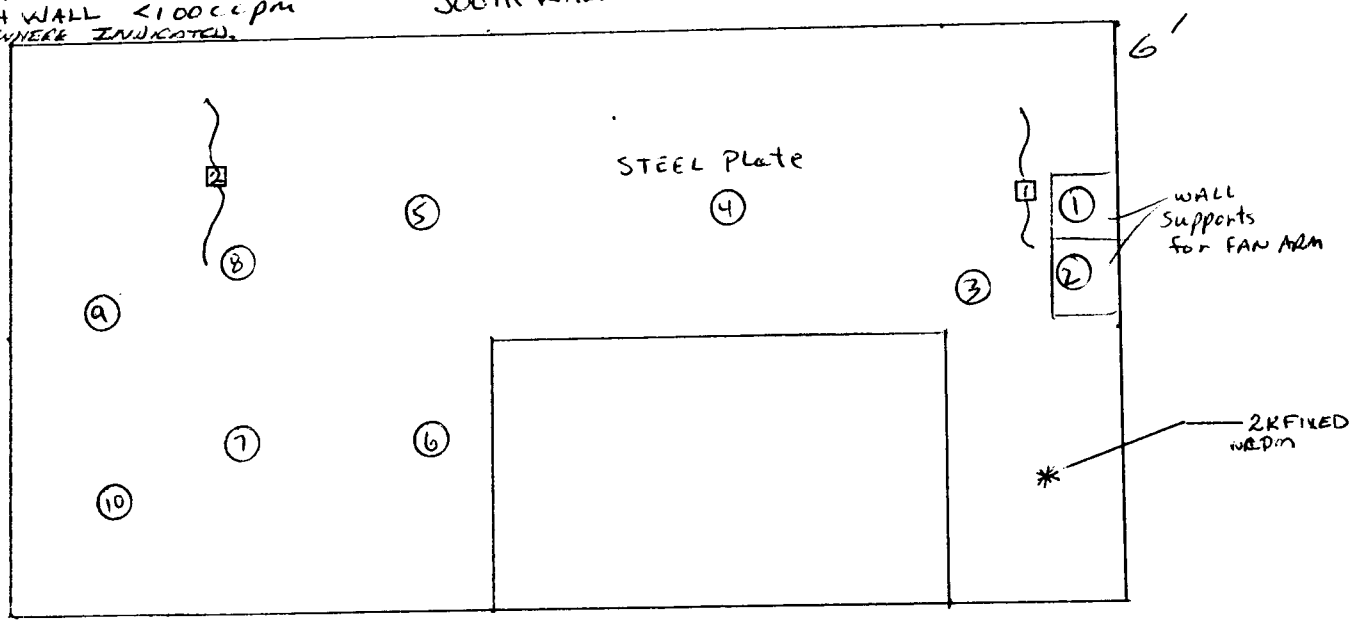

SURVEYED BY: [signature] 2-13-00 Signature/date

REVIEWED BY: [signature] Signature/date 2/16/00

Form FS-1000.1 FS-SOP-1000, rev 1, attch 8.2, page 11 File Code: HP31

South 4

FAN # ~~EAST~~ WALL

Activity Report

2/15/00
4:31:53PM

Batch Name:	52	**Acquisition Date:**	2/15/00
Batch ID:	Wipes Sample Counts - 200002151525	**Acquisition Time: (minutes)**	1.0
Group:	F		
Device:	LASP	**Operating Voltage: (volts)**	1,290.0
Selected Geometry:	1/8" Stainless Steel		

Efficiency Factors

Alpha Efficiency: (%)	0.31	±	0.00	**Beta Efficiency: (%)**	0.19	±	0.00

Sample ID	Quantity	Alpha (DPM)	2σ	Alpha MDA (DPM)	Beta Activity (DPM)	2σ	Beta MDA (DPM)
20000215152535-F66	0.00	-0.65	0.65	13.68	10.94	18.08	30.59
20000215162041-F67	0.00	-0.65	0.65	13.68	10.94	18.08	30.59
20000215162151-F68	0.00	-0.65	0.65	13.68	5.76	14.82	30.59
20000215162311-F69	0.00	-0.66	0.65	13.68	26.49	25.48	30.59
20000215162421-F70	0.00	-0.66	0.65	13.68	26.49	25.48	30.59
20000215162542-F71	0.00	-0.66	0.65	13.68	26.49	25.48	30.59
20000215162651-F72	0.00	-0.65	0.65	13.68	5.76	14.82	30.59
20000215162812-F73	0.00	-0.65	0.65	13.68	10.94	18.08	30.59
20000215162922-F74	0.00	-0.65	0.65	13.68	5.76	14.82	30.59
20000215163042-F75	0.00	2.60	6.52	13.68	0.26	10.61	30.59

Reviewed by: 2/16/00

BNL RADIOLOGICAL SURVEY FORM

REASON FOR SURVEY: ☐ ROUTINE ☒ SPECIAL

BLDG #: 704 LOCATION: Primary Fan Room #1 DATE/TIME: 2-13-00 1000 RWP #: [illegible]

INSTRUMENTS, MODEL / SERIAL #: Model #3 50545 9-8-00 / LB-5100 09228 8-11-01

DOSE RATES (HIGHEST)		AIRBORNE CONTAMINATION		
CONTACT	NA	TIME	uCi/cc	% DAC
GENERAL AREA	NA	NA	NA	NA

LEGEND: O SMEAR SURVEY LOCATION ☐ MASSLINN SURVEY LOCATION

XXX Y / ZZZ — XXX - CONTACT READING; ZZZ - READING @ 30 Cm; Y - RADIATION TYPE

SMEAR SURVEY RESULTS (DPM/100 cm²) ³H β-γ α

1. SEE ATTACHED		8. SEE ATTACHED		15.		22.	
2.		9.		16.		23.	
3.		10.		17.		24.	
4.		11.		18.		25.	
5.		12.		19.	NA	26.	NA
6.		13.	NA	20.		27.	
7.		14.		21.		28.	

MASSLINN SURVEY RESULTS (DPM)

1. LIK		8.	
2. LIK		9.	
3.		10.	
4.		11.	
5. NA		12. NA	
6.		13.	
7.		14.	

WEST WALL DIRECT FRISK FAN ROOM #1

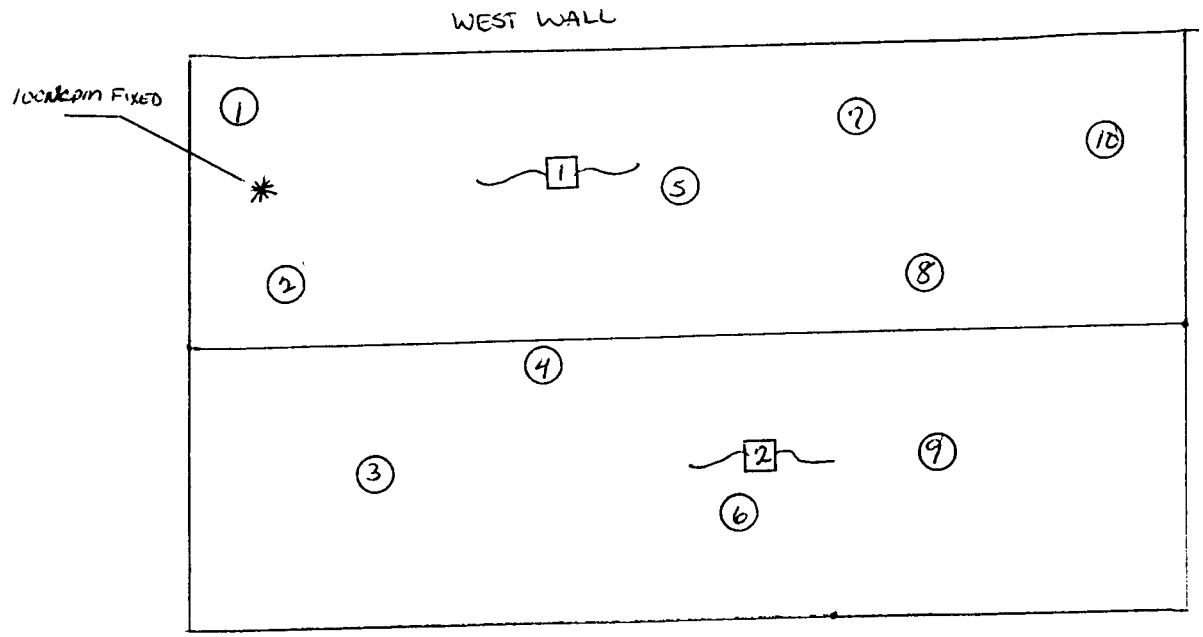

SURVEYED BY: [signature] 2-13-00 Signature/date

REVIEWED BY: [signature] Signature/date 2/16/00

File Cod

2/15/00
5:46:53PM

Activity Report

FAN#1 WEST WALL

Batch Name:	53	**Acquisition Date:**	2/15/00
Batch ID:	Wipes Sample Counts - 200002151529	**Acquisition Time: (minutes)**	1.0
Group:	G		
Device:	LASP	**Operating Voltage: (volts)**	1,290.0
Selected Geometry:	1/8" Stainless Steel		

Efficiency Factors

Alpha Efficiency: (%)	0.31	±	0.00	**Beta Efficiency: (%)**	0.19	±	0.00

Sample ID	Quantity	Alpha (DPM)	2σ	Alpha MDA (DPM)	Beta Activity (DPM)	2σ	Beta MDA (DPM)
20000215152936-G1	0.00	-0.65	0.65	13.68	-4.60	2.20	30.59
20000215163312-G2	0.00	2.60	6.52	13.68	0.26	10.61	30.59
20000215163422-G3	0.00	2.59	6.52	13.68	10.63	18.09	30.59
20000215163543-G4	0.00	5.84	9.20	13.68	10.31	18.11	30.59
20000215163653-G5	0.00	-0.66	0.65	13.68	16.13	20.84	30.59
20000215163813-G6	0.00	-0.66	0.65	13.68	16.13	20.84	30.59
20000215163923-G7	0.00	-0.66	0.65	13.68	31.67	27.51	30.59
20000215164044-G8	0.00	-0.66	0.65	13.68	21.31	23.28	30.59
20000215164154-G9	0.00	-0.68	0.65	13.68	67.94	38.84	30.59
20000215164314-G10	0.00	2.60	6.52	13.68	0.26	10.61	30.59

Reviewed by: 2/16/00

BNL RADIOLOGICAL SURVEY FORM

REASON FOR SURVEY ☐ ROUTINE ☑ SPECIAL RWP #

BLDG #: 704 LOCATION: FAN House #1 DATE/TIME: 2-13-00 / 1030

INSTRUMENTS, MODEL / SERIAL #: MODEL #3 50545 9-8-00 Ludlum 177 75655 2-4-01 / LB 5100 082296 2-11-01

DOSE RATES (HIGHEST)		AIRBORNE CONTAMINATION		
CONTACT	NA	TIME	cpm	% DAC
GENERAL AREA	NA	NA	NA	NA

LEGEND: O SMEAR SURVEY LOCATION O MASSLINN SURVEY LOCATI

XXX Y
ZZZ

XXX - CONTACT READING
ZZZ - READING @ 30 Cm

Y - RADIATION TYPE

SMEAR SURVEY RESULTS (DPM/100 cm²) ³H B-γ α

1. SEE ATTACHED	8. SEE ATTACHED	15. SEE ATTACHED	22. ~~SEE ATTACHED~~ NA
2.	9.	16.	23.
3.	10.	17.	24.
4.	11.	18.	25.
5.	12.	19.	26. NA
6.	13.	20.	27.
7.	14.	21. NA	28.

MASSLINN SURVEY RESULTS (DP

1. <1K	8.
2. <1K	9.
3. <1K	10.
4.	11. NA
5.	12.
6. NA	13.
7.	14.

Discharge VALVE

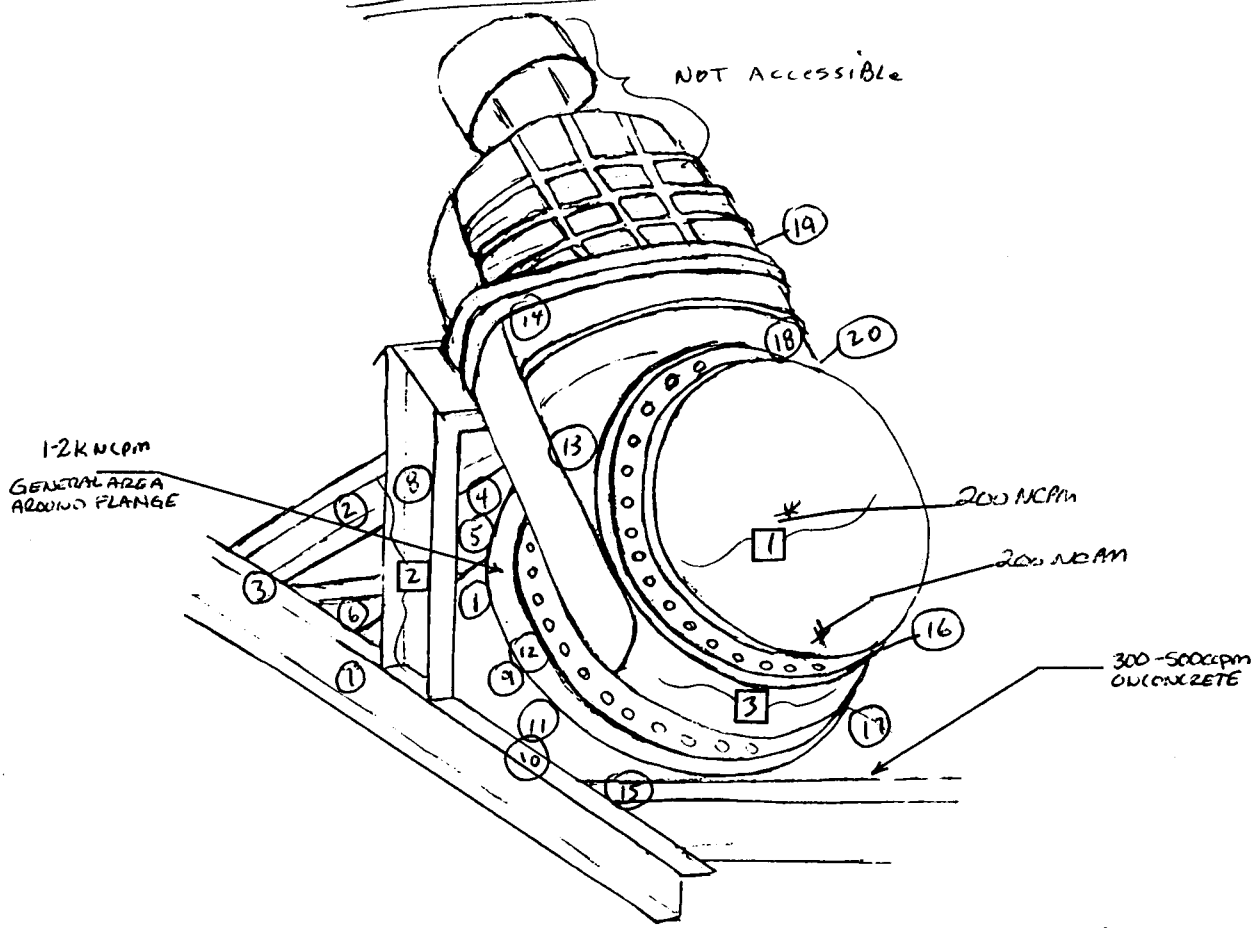

Direct frisk of Valves + Supports <100 cpm UNLESS NOTED

SURVEYED BY: Mark Blouvial 2/13/00 Signature/date 2-13-00 REVIEWED BY: Signature/date 2/16/00

Form FS-1000-1 FS-SOP-1000 rev 1 attch 8.2 page 11 File C

Activity Report

3:51:43PM

'AN#1 DISCHARGE VALVE

Batch Name:	48	**Acquisition Date:**	2/15/00
Batch ID:	Wipes Sample Counts - 200002151438	**Acquisition Time: (minutes)**	1.0
Group:	C		
Device:	LASP	**Operating Voltage: (volts)**	1,290.0
Selected Geometry:	1/8" Stainless Steel		

Efficiency Factors

Alpha Efficiency: (%)	0.31	±	0.00	**Beta Efficiency: (%)**	0.19	±	0.00

mple ID	Quantity	Alpha (DPM)	2σ	Alpha MDA (DPM)	Beta Activity (DPM)	2σ	Beta MDA (DPM)
000215143844-C~~61~~ 1	0.00	-0.66	0.65	13.68	31.67	27.51	30.59
000215152759-C~~52~~ 2	0.00	-0.66	0.65	13.68	31.67	27.51	30.59
000215152909-C~~53~~ 3	0.00	-0.66	0.65	13.68	21.31	23.28	30.59
000215153029-C~~54~~ 4	0.00	-0.69	0.65	13.68	99.02	46.40	30.59
000215153139-C~~55~~ 5	0.00	-0.67	0.65	13.68	47.21	32.85	30.59
000215153300-C~~56~~ 6	0.00	2.57	6.52	13.68	57.26	35.97	30.59
000215153410-C~~57~~ 7	0.00	-0.66	0.65	13.68	21.31	23.28	30.59
000215153530-C~~58~~ 8	0.00	-0.67	0.65	13.68	62.76	37.43	30.59
000215153640-C~~59~~ 9	0.00	-0.66	0.65	13.68	36.85	29.39	30.59
000215153800-C~~60~~ 10	0.00	-0.65	0.65	13.68	10.94	18.08	30.59
00215153910-C~~32~~ 11	0.00	2.59	6.52	13.68	5.44	14.83	30.59
000215154030-C~~33~~ 12	0.00	-0.67	0.65	13.68	42.03	31.17	30.59
000215154140-C~~34~~ 13	0.00	-0.65	0.65	13.68	0.58	10.59	30.59
000215154301-C~~35~~ 14	0.00	-0.70	0.65	13.68	140.47	54.89	30.59
000215154411-C~~36~~ 15	0.00	-0.66	0.65	13.68	31.67	27.51	30.59
000215154531-C~~37~~ 16	0.00	-0.66	0.65	13.68	16.13	20.84	30.59
000215154641-C~~38~~ 17	0.00	-0.69	0.65	13.68	99.02	46.40	30.59
000215154801-C~~39~~ 18	0.00	-0.67	0.65	13.68	42.03	31.17	30.59
000215154911-C~~40~~ 19	0.00	2.58	6.52	13.68	41.71	31.17	30.59
000215155031-C~~41~~ 20	0.00	-0.66	0.65	13.68	26.49	25.48	30.59

Reviewed by: 2/16/00

BNL RADIOLOGICAL SURVEY FORM

REASON FOR SURVEY ☐ ☐ OURCAN-01

BLDG #: 704 LOCATION: FAN House # 1 DATE/TIME: 2-13-00 / 1100 ROUTINE SPECIAL RWP #:

INSTRUMENTS, MODEL / SERIAL #: Lud-177 #75655, 2-4-01 / LB-5100 092286 2-14-01

DOSE RATES (HIGHEST)		AIRBORNE CONTAMINATION		
		TIME	uCi/cc	% DAC
CONTACT	N/A			
GENERAL AREA		NA	NA	NA

LEGEND: O SMEAR SURVEY LOCATION ☐ MASSLINN SURVEY LOCATION

XXX Y / ZZZ — XXX = CONTACT READING; ZZZ = READING @ 30 Cm; Y = RADIATION TYPE

SMEAR SURVEY RESULTS (DPM/100 cm²) ³H B-γ α

1. SEE ATTACHED	8. SEE ATTACHED	15. SEE ATTACHED	22. SEE ATTACHED
2.	9.	16.	23.
3.	10.	17.	24.
4.	11.	18.	25.
5.	12.	19.	26.
6.	13.	20.	27.
7.	14.	21.	28.

MASSLINN SURVEY RESULTS (DPM)

1. <1K	8.
2.	9.
3.	10.
4.	11.
5.	12.
6.	13.
7. <1K	14.

Close out Contamination Verification

Top view of FAN BASE + Pedestial
Direct Frisk <100cpm unless NOTED

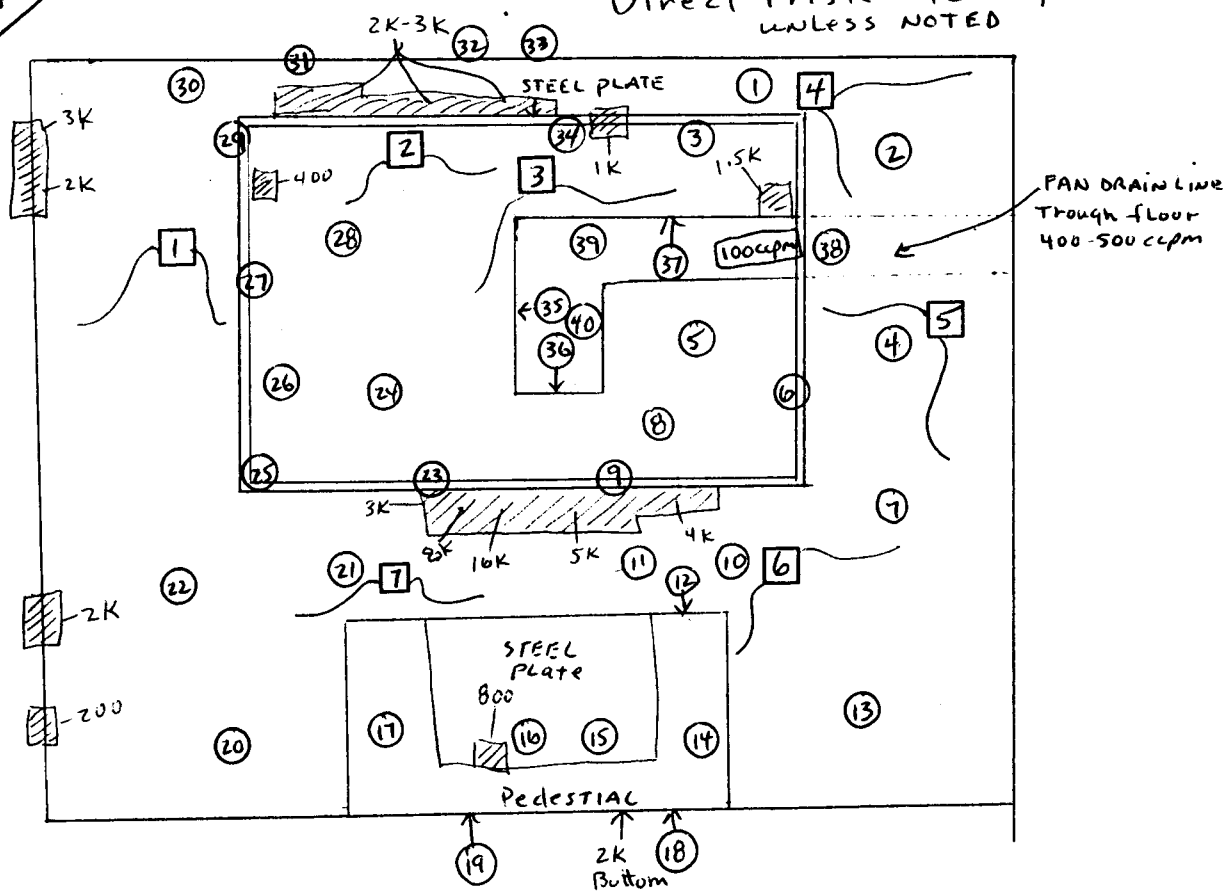

▨ = FIXED Contamination in cpm DIRECT FRISK
gross swipes of these Areas <100cpm

SURVEYED BY: Mark Blanciell 2/13/00 Signature/date

REVIEWED BY: Signature/date 2/16/00

File Code

Form FS-1000.1

FS-SOP-1000, rev 1, attch 8.2, page 11

Activity Report

5:29:48PM

ıN #1 PEDASTAL

tch Name:	54	**Acquisition Date:**	2/15/00
ıtch ID:	Wipes Sample Counts - 200002151533	**Acquisition Time: (minutes)**	1.0
roup:	I		
evice:	LASP	**Operating Voltage: (volts)**	1,290.0

lected Geometry: 1/8" Stainless Steel

Efficiency Factors

Alpha Efficiency: (%)	0.31	±	0.00	**Beta Efficiency: (%)**	0.19	±	0.00

ple ID	**Quantity**	**Alpha (DPM)**	**2σ**	**Alpha MDA (DPM)**	**Beta Activity (DPM)**	**2σ**	**Beta MDA (DPM)**
)0215153337-I~~11~~ 1	0.00	-0.66	0.65	13.68	31.67	27.51	30.59
)0215164544-I~~12~~ 2	0.00	5.83	9.20	13.68	41.39	31.18	30.59
)0215164654-I~~13~~ 3	0.00	-0.67	0.65	13.68	57.58	35.97	30.59
)0215164814-I~~14~~ 4	0.00	-0.66	0.65	13.68	31.67	27.51	30.59
)0215164924-I~~95~~ 5	0.00	-0.66	0.65	13.68	26.49	25.48	30.59
)0215165044-I~~16~~ 6	0.00	-0.66	0.65	13.68	26.49	25.48	30.59
)0215165155-I~~17~~ 7	0.00	-0.66	0.65	13.68	16.13	20.84	30.59
)0215165315-I~~18~~ 8	0.00	5.83	9.20	13.68	25.85	25.49	30.59
)0215165425-I~~19~~ 9	0.00	-0.67	0.65	13.68	47.21	32.85	30.59
)0215165545-I~~20~~ 10	0.00	-0.67	0.65	13.68	47.21	32.85	30.59
)0215165656-I~~21~~ 11	0.00	-0.66	0.65	13.68	31.67	27.51	30.59
)0215165815-I~~22~~ 12	0.00	-0.66	0.65	13.68	21.31	23.28	30.59
)0215165926-I~~23~~ 13	0.00	-0.65	0.65	13.68	10.94	18.08	30.59
)0215170046-I~~24~~ 14	0.00	-0.66	0.65	13.68	31.67	27.51	30.59
)0215170156-I~~26~~ 15	0.00	-0.65	0.65	13.68	10.94	18.08	30.59
)0215170316-I~~25~~ 16	0.00	-0.67	0.65	13.68	42.03	31.17	30.59
)0215170426-I~~27~~ 17	0.00	-0.66	0.65	13.68	21.31	23.28	30.59
)0215170546-I~~28~~ 18	0.00	-0.66	0.65	13.68	21.31	23.28	30.59
)0215170656-I~~29~~ 19	0.00	-0.66	0.65	13.68	21.31	23.28	30.59
)0215170817-I~~30~~ 20	0.00	2.58	6.52	13.68	52.08	34.45	30.59
)0215170927-I~~41~~ 21	0.00	2.58	6.52	13.68	46.89	32.85	30.59
)0215171047-I~~40~~ 22	0.00	2.57	6.52	13.68	67.62	38.85	30.59
)0215171157-I~~39~~ 23	0.00	-0.75	0.65	13.68	259.64	74.08	30.59
)0215171317-I~~38~~ 24	0.00	-0.67	0.65	13.68	42.03	31.17	30.59
)0215171427-I~~37~~ 25	0.00	2.56	6.52	13.68	88.34	44.03	30.59
)0215171547-I~~36~~ 26	0.00	-0.66	0.65	13.68	31.67	27.51	30.59
)0215171657-I~~35~~ 27	0.00	-0.66	0.65	13.68	36.85	29.39	30.59
)0215171818-I~~34~~ 28	0.00	2.59	6.52	13.68	10.63	18.09	30.59
)0215171928-I~~33~~ 29	0.00	-0.68	0.65	13.68	78.30	41.51	30.59
)0215172048-I~~32~~ 30	0.00	-0.71	0.65	13.68	156.02	57.76	30.59
)0215172158-I~~60~~ 31	0.00	-0.65	0.65	13.68	10.94	18.08	30.59
)0215172318-I~~59~~ 32	0.00	5.04	11.41	21.82	22.11	31.59	46.32

eviewed by: 2/16/00

Activity Report

3:45:54PM

#1 PEDASTAL

ch Name:	55	Acquisition Date:	2/15/00
ch ID:	Wipes Sample Counts - 200002151735	Acquisition Time: (minutes)	1.0
oup:	A		
ice:	LASP	Operating Voltage: (volts)	1,290.0

ected Geometry: 1/8" Stainless Steel

Efficiency Factors

Alpha Efficiency: (%)	0.31	±	0.00	Beta Efficiency: (%)	0.19	±	0.00

le ID	Quantity	Alpha (DPM)	2σ	Alpha MDA (DPM)	Beta Activity (DPM)	2σ	Beta MDA (DPM)
0215173508-A~~58~~ 33	0.00	-0.66	0.65	13.68	31.67	27.51	30.59
0215173638-A~~57~~ 34	0.00	-0.65	0.65	13.68	10.94	18.08	30.59
0215173758-A~~56~~ 35	0.00	-0.66	0.65	13.68	16.13	20.84	30.59
0215173909-A~~55~~ 36	0.00	2.59	6.52	13.68	5.44	14.83	30.59
0215174029-A~~54~~ 37	0.00	-0.65	0.65	13.68	5.76	14.82	30.59
0215174139-A~~53~~ 38	0.00	-0.66	0.65	13.68	31.67	27.51	30.59
0215174259-A~~52~~ 39	0.00	-0.66	0.65	13.68	26.49	25.48	30.59
0215174409-A~~61~~ 40	0.00	-0.65	0.65	13.68	10.94	18.08	30.59

eviewed by: 2/16/00

BNL RADIOLOGICAL SURVEY FORM

REASON FOR SURVEY

BLDG #: 704 LOCATION: FAN House #1 DATE/TIME: 2-13-00 / 1400 ROUTINE ☐ SPECIAL ☐ RWP #: [illegible]

INSTRUMENTS, MODEL / SERIAL #: Lud-177 #75655, 2-4-01 / Model-3 50545 9-8-00

DOSE RATES (HIGHEST)		AIRBORNE CONTAMINATION		
CONTACT	N/A	TIME	uCi/cc	%DAC
GENERAL AREA		NA	NA	NA

LEGEND: O SMEAR SURVEY LOCATION ☐ MASSLINN SURVEY LOCATION

XXX Y / ZZZ — XXX - CONTACT READING; ZZZ - READING @ 30 Cm; Y - RADIATION TYPE

SMEAR SURVEY RESULTS (DPM/100 cm²) ³H B-γ α				MASSLINN SURVEY RESULTS (DPM/	
1. SEE ATTACHED	8. SEE ATTACHED	15. NA	22. NA	1. <1K	8.
2.	9.	16.	23.	2.	9.
3.	10.	17.	24.	3.	10.
4.	11. NA	18.	25.	4.	11. N/A
5.	12.	19.	26.	5.	12.
6.	13.	20.	27.	6.	13.
7.	14.	21.	28.	7. <1K	14.

Close out & Contamination Verification

Top View Floor

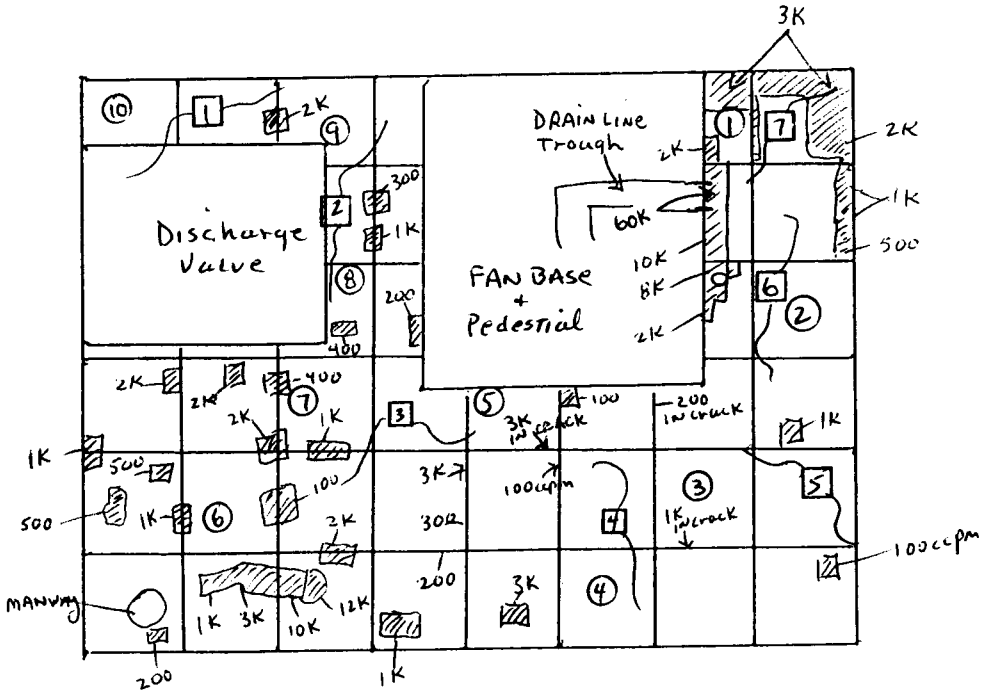

Direct Frisk of Floor <100ccpm UNLESS NOTED

▨ = Fixed Contamination in ccpm gross swipes of these area <100 ccpm

SURVEYED BY: Mark Blanciak 2/13/00 Signature/date

REVIEWED BY: [signature] Signature/date 2/16/00

Form FS-1000.1 FS-SOP-1000 rev 1 attch 8.2 page 11 File Code

Activity Report

:AN #1 FLOOR

Batch Name:	47	**Acquisition Date:**	2/15/00
atch ID:	Wipes Sample Counts - 200002151431	**Acquisition Time: (minutes)**	1.0
Group:	B		
Device:	LASP	**Operating Voltage: (volts)**	1,290.0
Selected Geometry:	1/8" Stainless Steel		

Efficiency Factors

Alpha Efficiency: (%)	0.31	±	0.00	**Beta Efficiency: (%)**	0.19	±	0.00

nple ID	**Quantity**	**Alpha (DPM)**	**2σ**	**Alpha MDA (DPM)**	**Beta Activity (DPM)**	**2σ**	**Beta MDA (DPM)**
)00215143145-B63	0.00	-0.66	0.65	13.68	31.67	27.51	30.59
)00215151529-B81	0.00	-0.65	0.65	13.68	10.94	18.08	30.59
)00215151640-B82	0.00	-0.65	0.65	13.68	5.76	14.82	30.59
)00215151800-B83	0.00	-0.65	0.65	13.68	10.94	18.08	30.59
)00215151910-B84	0.00	-0.65	0.65	13.68	5.76	14.82	30.59
)00215152030-B85	0.00	-0.65	0.65	13.68	-4.60	2.20	30.59
)00215152140-B86	0.00	-0.66	0.65	13.68	16.13	20.84	30.59
)00215152300-B87	0.00	-0.66	0.65	13.68	16.13	20.84	30.59
)00215152410-B88	0.00	2.59	6.52	13.68	20.99	23.28	30.59
)00215152530-B89	0.00	-0.66	0.65	13.68	21.31	23.28	30.59

Reviewed by: 2/16/00

REASON FOR SURVEY

BLDG #: 704 LOCATION: Primary Fan Room # 1 DATE/TIME: 1/26/00 0830 ROUTINE SPECIAL RWP #: 00BGRR04

INSTRUMENTS, MODEL / SERIAL #: LB-5100 26249 3-12-00

DOSE RATES (HIGHEST)		AIRBORNE CONTAMINATION		
CONTACT	NA	TIME	uCi/cc	%DAC
GENERAL AREA	NA	NA	NA	NA

LEGEND: O SMEAR SURVEY LOCATION O MASSLINN SURVEY LOCATION

XXX Y / ZZZ — XXX - CONTACT READING; ZZZ - READING @ 30 Cm; Y - RADIATION TYPE

SMEAR SURVEY RESULTS (DPM/100 cm²) ³H B-γ α				MASSLINN SURVEY RESULTS (DPM/LAS)	
1. SEE ATTACHED	8. SEE ATTACHED	15. SEE ATTACHED	22. SEE ATTACHED	1. ~~<1K~~ NA	8. ~~<1K~~ NA
2.	9.	16.	23.	2.	9.
3.	10.	17.	24.	3.	10.
4.	11.	18.	25.	4.	11.
5.	12.	19.	26.	5.	12.
6.	13.	20.	27.	6.	13.
7.	14.	21.	28.	7.	14.

BROOKHAVEN GRAPHITE RESEARCH REACTOR CHARACTERIZATION SURVEY MAP

SURVEY OF FAN #1 PED TOP, PED RIGHT SIDE AND RIGHT WALL PRIOR TO DEPOSTING. (WEST WALL)

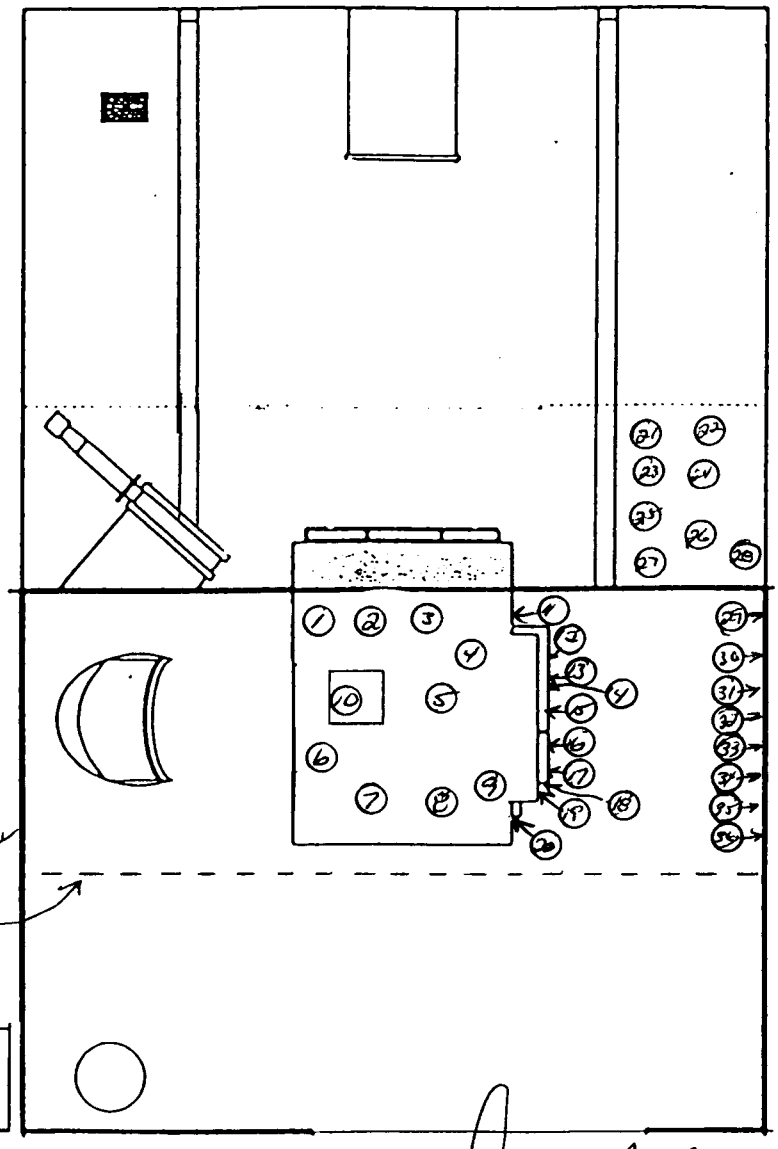

POSTED CONTAMINATION AREA RWP REQUIRED FOR ENTRY

BGRR

REVIEWED BY: Mark Blanchard 2-9-00 Signature/date

REVIEWED BY: Dorian P. Morgan 10/2/2K Signature/date

2/10/2K

2/8/00
6:03:58PM

Activity Report

FAN#1 RIGHT SIDE WALL

Batch Name:	461	**Acquisition Date:**	2/8/00
Batch ID:	Wipe Samples - 200002081614	**Acquisition Time: (minutes)**	2.0
Group:	H		
Device:	HWM Unit 1	**Operating Voltage: (volts)**	1,350.0
Selected Geometry:	1/8" Stainless Steel		

Efficiency Factors

Alpha Efficiency: (%)	0.30	±	0.00	**Beta Efficiency: (%)**	0.17	±	0.12

Sample ID	Quantity	Alpha (DPM)	2σ	Alpha MDA (DPM)	Beta Activity (DPM)	2σ	Beta MDA (DPM)
20000208161457-~~H1~~ 21	0.00	-0.44	0.54	7.41	5.44	12.27	22.03
20000208172245-~~H2~~ 22	0.00	-0.44	0.54	7.41	8.29	14.16	22.03
20000208172454-~~H3~~ 23	0.00	-0.44	0.54	7.41	8.29	14.16	22.03
20000208172705-~~H4~~ 24	0.00	-0.44	0.54	7.41	22.59	23.63	22.03
20000208172915-~~H5~~ 25	0.00	1.21	3.35	7.41	5.42	12.27	22.03
20000208173125-~~H6~~ 26	0.00	-0.44	0.54	7.41	8.29	14.16	22.03
20000208173335-~~H7~~ 27	0.00	-0.44	0.54	7.41	11.15	16.05	22.03
20000208173546-~~H8~~ 28	0.00	-0.44	0.54	7.41	11.15	16.05	22.03
20000208173756-~~H9~~ 29	0.00	-0.44	0.54	7.41	16.87	19.84	22.03
20000208174006-~~H10~~ 30	0.00	1.21	3.35	7.41	2.56	10.38	22.03
20000208174216-~~H11~~ 31	0.00	-0.44	0.54	7.41	31.16	29.31	22.03
20000208174426-~~H12~~ 32	0.00	1.21	3.35	7.41	42.58	36.88	22.03
20000208174636-~~H13~~ 33	0.00	-0.44	0.54	7.41	14.01	17.94	22.03
20000208174847-~~H14~~ 34	0.00	-0.44	0.54	7.41	16.87	19.84	22.03
20000208175057-~~H15~~ 35	0.00	-0.44	0.54	7.41	14.01	17.94	22.03
20000208175307-~~H16~~ 36	0.00	1.21	3.35	7.41	16.85	19.83	22.03

Reviewed by: Doreen F. Meyer

Activity Report

6:29:41PM

:AN#1 PED TOP

Batch Name:	462	Acquisition Date:	2/8/00
Batch ID:	Wipe Samples - 200002081618	Acquisition Time: (minutes)	2.0
Group:	E		
Device:	HWM Unit 1	Operating Voltage: (volts)	1,350.0

Selected Geometry: 1/8" Stainless Steel

Efficiency Factors

Alpha Efficiency: (%)	0.30	±	0.00	Beta Efficiency: (%)	0.17	±	0.12

mple ID	Quantity	Alpha (DPM)	2σ	Alpha MDA (DPM)	Beta Activity (DPM)	2σ	Beta MDA (DPM)
000208161825-E~~21~~ 1	0.00	-0.44	0.54	7.41	5.44	12.27	22.03
000208180606-E~~22~~ 2	0.00	1.21	3.35	7.41	88.31	67.21	22.03
000208180816-E~~23~~ 3	0.00	-0.44	0.54	7.41	51.17	42.58	22.03
000208181026-E~~24~~ 4	0.00	-0.45	0.54	7.41	105.48	78.60	22.03
000208181236-E~~25~~ 5	0.00	-0.44	0.54	7.41	39.74	34.99	22.03
000208181447-E~~26~~ 6	0.00	-0.44	0.54	7.41	16.87	19.84	22.03
000208181657-E~~27~~ 7	0.00	-0.45	0.54	7.41	91.19	69.12	22.03
000208181907-E~~28~~ 8	0.00	-0.44	0.54	7.41	8.29	14.16	22.03
000208182127-E~~28~~ 9	0.00	1.21	3.35	7.41	96.89	72.90	22.03
000208182738-E~~30~~ 10	0.00	-0.44	0.54	11.84	65.46	57.89	32.53

Reviewed by: Dorion Meyer 2/10/2K

2/9/00
9:49:01AM

Activity Report

FAN #1 PED RIGHT SIDE

Batch Name:	463	**Acquisition Date:**	2/8/00
Batch ID:	Wipe Samples - 200002081621	**Acquisition Time: (minutes)**	2.0
Group:	D		
Device:	HWM Unit 1	**Operating Voltage: (volts)**	1,350.0
Selected Geometry:	1/8" Stainless Steel		

Efficiency Factors

Alpha Efficiency: (%)	0.30	±	0.00	**Beta Efficiency: (%)**	0.17	±	0.12

Sample ID	Quantity	Alpha (DPM)	2σ	Alpha MDA (DPM)	Beta Activity (DPM)	2σ	Beta MDA (DPM)
20000208162110-D~~31~~ 11	0.00	1.15	3.38	7.41	1,300.26	871.20	22.03
20000208183153-D~~32~~ 12	0.00	1.21	3.35	7.41	79.74	61.52	22.03
20000208183403-D~~33~~ 13	0.00	-0.44	0.54	7.41	2.58	10.38	22.03
20000208183613-D~~34~~ 14	0.00	-0.44	0.54	7.41	22.59	23.63	22.03
20000208183823-D~~35~~ 15	0.00	-0.44	0.54	7.41	48.31	40.68	22.03
20000208184034-D~~36~~ 16	0.00	-0.44	0.54	7.41	51.17	42.58	22.03
20000208184244-D~~37~~ 17	0.00	-0.45	0.54	7.41	94.05	71.01	22.03
20000208184454-D~~38~~ 18	0.00	-0.44	0.54	7.41	39.74	34.99	22.03
20000208184704-D~~39~~ 19	0.00	-0.44	0.54	7.41	22.59	23.63	22.03
20000208184915-D~~40~~ 20	0.00	-0.44	0.54	7.41	16.87	19.84	22.03

Reviewed by: _____

REASON FOR SURVEY

BLDG #: 704 LOCATION: Primary Fan Room # 1 DATE/TIME: 1/26/00 0930 ROUTINE ☐ SPECIAL ☐ RWP #: 00-RGM-0

INSTRUMENTS. MODEL / SERIAL #: LB-5100 26249 3-12-00

DOSE RATES (HIGHEST)		AIRBORNE CONTAMINATION			LEGEND: O SMEAR SURVEY LOCATION O MASSLINN SURVEY LOCATION
CONTACT	NA	TIME	dpm/cc	%DAC	XXX Y ZZZ
GENERAL AREA	NA	NA	NA	NA	XXX - CONTACT READING ZZZ - READING @ 30 Cm Y - RADIATION TYPE

SMEAR SURVEY RESULTS (DPM/100 cm²) ³H (B-γ) (α)				MASSLINN SURVEY RESULTS (DPM/LAS)	
1. SEE ATTACHED	8. SEE ATTACHED	15. SEE ATTACHED	22. SEE ATTACHED	1. NA	8. NA
2.	9.	16.	23.	2.	9.
3.	10.	17.	24.	3.	10.
4.	11.	18.	25.	4.	11.
5.	12.	19.	26.	5.	12.
6.	13.	20.	27.	6.	13.
7.	14.	21.	28.	7.	14.

BROOKHAVEN GRAPHITE RESEARCH REACTOR
CHARACTERIZATION SURVEY MAP

SURVEY OF FAN HOUSE #1 FLOOR PRIOR TO REGRESSING ROPES.

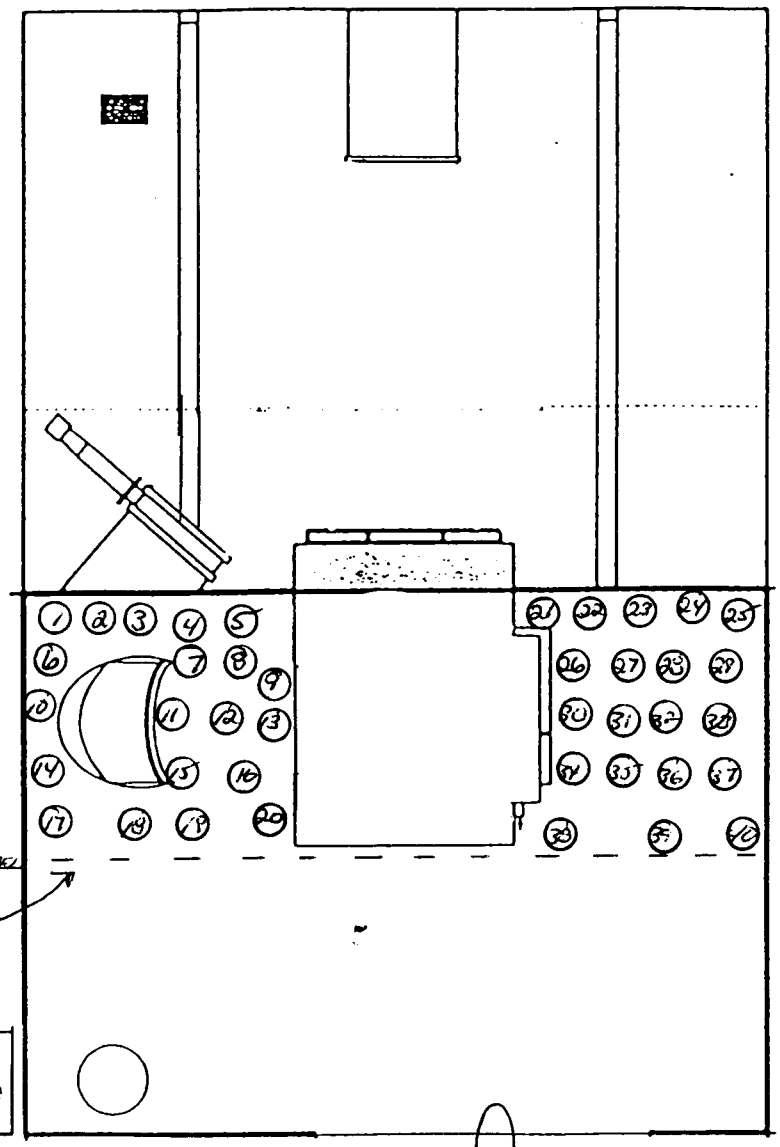

POSTED: LA RWP REQUIRED

SURVEYED BY: Mark Beaumont 2-9-00 Signature/date

REVIEWED BY: Dorian Morgan 2/10/2K Signature/date

2/9/00
9:51:23AM

Activity Report

FAN#1 LEFT SIDE FLOOR

Batch Name:	467	**Acquisition Date:**	2/8/00
Batch ID:	Wipe Samples - 200002081805	**Acquisition Time: (minutes)**	2.0
Group:	H		
Device:	HWM Unit 1	**Operating Voltage: (volts)**	1,350.0
Selected Geometry:	1/8" Stainless Steel		

Efficiency Factors

Alpha Efficiency: (%)	0.30	±	0.00	**Beta Efficiency: (%)**	0.17	±	0.12

Sample ID	Quantity	Alpha (DPM)	2σ	Alpha MDA (DPM)	Beta Activity (DPM)	2σ	Beta MDA (DPM)
20000208180559-H1	0.00	-0.44	0.54	7.41	22.59	23.63	22.03
20000208204224-H2	0.00	-0.44	0.54	7.41	42.59	36.89	22.03
20000208204435-H3	0.00	-0.44	0.54	7.41	39.74	34.99	22.03
20000208204645-H4	0.00	-0.44	0.54	7.41	19.73	21.73	22.03
20000208204855-H5	0.00	-0.44	0.54	7.41	31.16	29.31	22.03
20000208205106-H6	0.00	-0.44	0.54	7.41	45.45	38.79	22.03
20000208205315-H7	0.00	-0.44	0.54	7.41	31.16	29.31	22.03
20000208205526-H8	0.00	-0.44	0.54	7.41	31.16	29.31	22.03
20000208205736-H9	0.00	-0.44	0.54	7.41	19.73	21.73	22.03
20000208205946-H10	0.00	-0.44	0.54	7.41	34.02	31.20	22.03
20000208210156-H11	0.00	-0.45	0.54	7.41	151.21	108.94	22.03
20000208210406-H12	0.00	-0.45	0.54	7.41	102.62	76.70	22.03
20000208210617-H13	0.00	-0.45	0.54	7.41	128.35	93.77	22.03
20000208210827-H14	0.00	-0.44	0.54	7.41	71.18	55.85	22.03
20000208211037-H15	0.00	-0.45	0.54	7.41	105.48	78.60	22.03
20000208211257-H16	0.00	-0.45	0.54	7.41	148.35	107.04	22.03
20000208211508-H17	0.00	-0.45	0.54	7.41	134.06	97.56	22.03
20000208211718-H18	0.00	-0.44	0.54	7.41	51.17	42.58	22.03
20000208211928-H19	0.00	-0.44	0.54	7.41	85.47	65.33	22.03
20000208212138-H20	0.00	-0.44	0.54	7.41	51.17	42.58	22.03

Reviewed by: Dorian Meyer

2/8/00
5:27:49PM

Activity Report

FANHOUSE #1 RIGHT SIDE FLOOR

Batch Name:	459	**Acquisition Date:**	2/8/00
Batch ID:	Wipe Samples - 200002081556	**Acquisition Time: (minutes)**	2.0
Group:	G		
Device:	HWM Unit 1	**Operating Voltage: (volts)**	1,350.0
Selected Geometry:	1/8" Stainless Steel		

Efficiency Factors

Alpha Efficiency: (%)	0.30	±	0.00	**Beta Efficiency: (%)**	0.17	±	0.12

Sample ID	Quantity	Alpha (DPM)	2σ	Alpha MDA (DPM)	Beta Activity (DPM)	2σ	Beta MDA (DPM)
20000208155656-G~~61~~ 21	0.00	-0.44	0.54	7.41	22.59	23.63	22.03
20000208163911-G~~62~~ 22	0.00	-0.44	0.54	7.41	34.02	31.20	22.03
20000208164121-G~~63~~ 23	0.00	1.21	3.35	7.41	22.57	23.62	22.03
20000208164331-G~~64~~ 24	0.00	-0.44	0.54	7.41	19.73	21.73	22.03
20000208164541-G~~65~~ 25	0.00	-0.44	0.54	7.41	19.73	21.73	22.03
20000208164751-G~~66~~ 26	0.00	-0.44	0.54	7.41	19.73	21.73	22.03
20000208165002-G~~67~~ 27	0.00	-0.44	0.54	7.41	19.73	21.73	22.03
20000208165212-G~~68~~ 28	0.00	1.21	3.35	7.41	22.57	23.62	22.03
20000208165422-G~~69~~ 29	0.00	-0.44	0.54	7.41	19.73	21.73	22.03
20000208165632-G~~70~~ 30	0.00	1.21	3.35	7.41	36.86	33.09	22.03
20000208165842-G~~71~~ 31	0.00	-0.44	0.54	7.41	34.02	31.20	22.03
20000208170053-G~~72~~ 32	0.00	-0.44	0.54	7.41	79.75	61.53	22.03
20000208170313-G~~73~~ 33	0.00	-0.45	0.54	7.41	96.90	72.91	22.03
20000208170523-G~~74~~ 34	0.00	-0.44	0.54	7.41	51.17	42.58	22.03
20000208170733-G~~75~~ 35	0.00	-0.45	0.54	7.41	91.19	69.12	22.03
20000208170943-G~~76~~ 36	0.00	-0.44	0.54	7.41	76.89	59.64	22.03
20000208171154-G~~77~~ 37	0.00	-0.45	0.54	7.41	145.50	105.14	22.03
20000208171404-G~~78~~ 38	0.00	-0.44	0.54	7.41	71.18	55.85	22.03
20000208171614-G~~79~~ 39	0.00	-0.44	0.54	7.41	54.03	44.47	22.03
20000208171824-G~~80~~ 40	0.00	1.21	3.35	7.41	74.02	57.73	22.03

Reviewed by: Dorian Meyer