BROOKHAVEN BULLETIN
Vol.-36 - No. 27 July 9, 1982
BROOKHAVEN NATIONAL LABORATORY

BNL Faces The Energy Challenge

In the annals of BNL's energy conservation history, the weekend of Washington's Birthday 1973 is infamous. That's the weekend when icy temperatures, low fuel reserves and delayed oil deliveries plunged the Lab into its first fuel oil crisis.

Vincent O'Leary, who is Associate Director for Administration, recalled that the Lab's first taste of a fuel shortage was essentially unrelated to the worldwide crisis that occurred shortly thereafter. But it was a good harbinger of that crisis. "That one emergency demonstrated our vulnerability and got us to thinking about how totally dependent we were on our fuel deliveries," he said, "so we instituted a number of actions over that weekend and began to look into where else we could cut down."

Since that beginning, personnel in Plant Engineering have faced a continuing challenge to lower the Lab's energy requirements and the costs associated with them. How they have fared can be seen by looking at BNL's energy conservation activities — past, present and future.

Problem-Solving In The Past

When oil was plentiful and cheap, few were particularly careful about wasting it. So nine years ago, when fuel oil suddenly became a scarce commodity, most individuals and institutions found it relatively easy to "tighten the belt" and conserve energy somewhere. BNL was no exception. In the first two years of crisis, everyone cooperated to reduce energy usage and to plan with efficiency in mind.

The chart of of Energy Conservation Statistics on this page indicates just how effective these initial measures were. In the period of fiscal year (FY) 1973 to FY'75, electric power usage declined 8.8%, accounting for 98% of the total decrease through FY'81. Similarly, the greater part of the total 15.9% decrease in fuel oil use took place during the first two years of the Lab's conservation activities. While much of this can be attributed to belt tightening, the Lab had pretty well reached the last notch of the belt by the end of 1975, when Vincent O'Leary told the Lab's Energy Conservation Committee, "We have gone beyond the 'quick fixes' - turning off lights, removing bulbs, adjusting thermostats - to develop a comprehensive plan. The plan will cover conservation projects proposed for the near term and a long-range program."

Where belt tightening required everyone to cooperate in changing long-standing habits, creating a comprehensive plan also demanded creativity and money. With DOE funding, Plant Engineering has been able to implement many creative ideas since 1975, a partial list of which includes: 1975, automatic temperature setback control system installed in Physics, Bldg. 510....1976, thermography scan of Lab site undertaken to identify areas of substantial heat loss....1977, lighting changed from incandescent to fluorescent and/or high pressure sodium....1978, steam absorption machines and cooling tower modified.... 1979, Bldg. 356 received new coat of polyurethane insulation....1980, Central Steam Plant retrofitted to use ALF fuel more efficiently and to add flue economizer to boiler no. 5....1981, blending system installed to allow ALF to replace no. 4 fuel.

Though these efforts reduced the Lab's energy requirements 14% over that period, statistics show that energy expenses at BNL more than quintupled between FY'73 and FY'81. One thing that prevented them from going as high as they did elsewhere in the nation was ALF, the alternate liquid fuel developed by Joe Rose, now head of Plant Engineering's Engineering Division.

ALF is a specialized blend of recycled or surplus combustible liquids such as alcohols, mineral spirits, fuel oils and solvents. In FY'73, ALF represented only 3.3% of fuel in use at BNL. Since then, continuing efforts to find ways to utilize it more effectively have made ALF an impressive 32.8% of the Lab's total fuel use, while standard no. 2,4 and 6 fuel oils have dropped from 93.4% to 63.2%. Overall, the substitution of ALF for over 18 million gallons of critical fuel oil has saved the Lab approximately $4,000,000 since 1973.

But fuel oil accounts for only part of the Lab's energy bill. Equally important is electric power, which has also known large price increases since 1973. If ALF is BNL's answer to the high cost of fuel oil, PASNY has helped the Lab respond to rising rates for electric power.

The Present Power Picture

The Power Authority of the State of New York — PASNY — began selling power to Brookhaven on a temporary basis last October. Because PASNY generates power using energy sources other than oil, its rates are considerably lower. In a May 18 press release, PASNY estimated that the power sent to BNL thus far had helped save about 200 jobs. The release announced a public hearing, which was held June 22, regarding a proposed permanent contract for an allocation to BNL of 16,178 kilowatts of power from PASNY's James A. Fitzpatrick Nuclear Plant on Lake Ontario, near Oswego. The contract, which was approved by the New York State Power Authority following the hearing, will extend through June 30, 1983, and provides for annual renewals through 1985.

"We're very pleased to be getting the power. It's saving us a lot of money," said Ed Shelton, who has been responsible for coordinating BNL's power allotments from PASNY. With Shelton's retirement at the end of June, Mark Culp has assumed this responsibility. Through May, PASNY power had already saved Brookhaven $2,594,800. By the end of FY'82, PASNY should have accounted for savings of about $4,400,000.

Using PASNY power in addition to LILCO's does have one small drawback, however. Shelton said, "It makes the bill a little more complicated compared to what it was ten years ago. Then, power cost us less than a penny per kilowatt hour — and we used to worry about it reaching 1¢."

With costs of both electric power and fuel having far outstripped the projections of the past, planning for energy needs at BNL becomes a matter of trying to outguess and outsmart the future. One way of doing this may be with cogeneration.

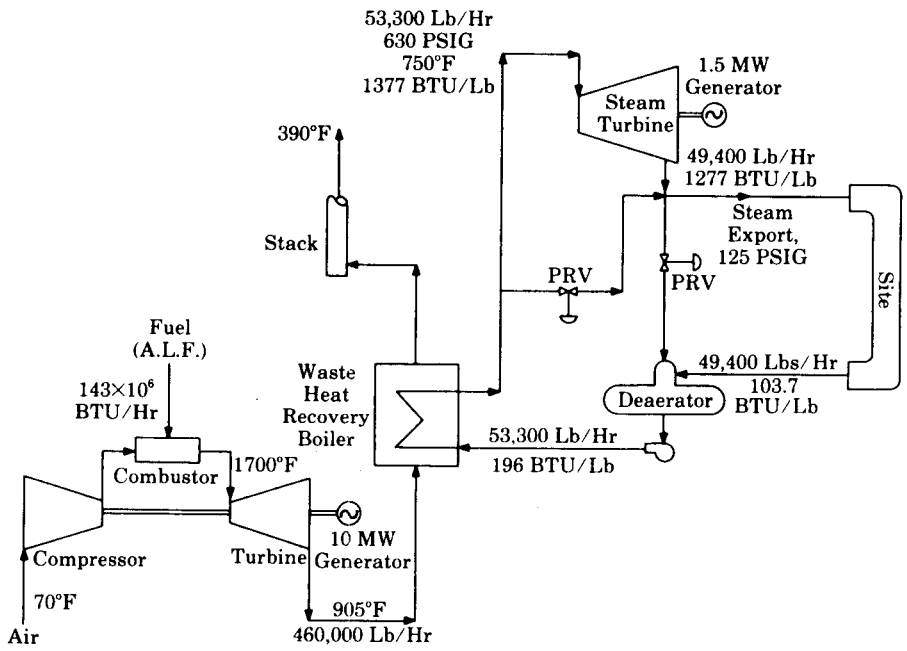

In the combined cycle cogeneration plant, incoming ambient air enters the compressor section of the gas turbine and is compressed several times atmospheric pressure. The compressed air discharges through a combustor (burner) into which fuel (ALF) is injected and ignited. The hot, high pressure gases are then expanded through the turbine section, producing mechanical work which drives both the compressor and the generator, for 10 megawatts of electric power. Hot exhaust gases are ducted to a waste heat recovery boiler (a large heat exchanger) where water is converted to superheated steam at 630 psig and 750°F. The cooled turbine exhaust gases are then discharged to the atmosphere through the stack, while the steam is piped to a steam turbine and expanded to produce an additional 1.5 megawatts. The steam leaves the turbine at a pressure of 125 psig and is exported to buildings around the site. After use, the condensed steam is pumped back to the cogeneration facility where the deaerator preheats the condensate and removes dissolved oxygen (to prevent boiler corrosion). Then the feedwater is pumped back into the boiler to repeat the closed cycle. If the steam turbine is out of service, 125 psig steam can be provided by throttling through a reducing valve bypass.

Outfoxing The Future

Cogeneration is a term used to describe the simultaneous generation of electric power and some form of thermal energy. To investigate the possibility of utilizing cogeneration at BNL, Plant Engineering employed the engineering firm of Pope, Evans and Robbins Inc. Their feasibility study, issued in April, recommended that the Lab build a combined cycle cogeneration plant to complement other energy-related projects proposed for the near term. These include the replacement of boiler no. 3 in the Central Steam Plant and the construction of a chilled water and compressed air facility which would provide enough refrigeration and compressed air capacity for six buildings, as well as sufficient reserve for systems that are

(Continued on page 2)

Energy Consumption Statistics*

Energy Source	Consumption Outlays (Percent of Fuel Total**) FY '73	FY '75	FY '81	Percent of Change FY '75 vs. '73	FY '81 vs. '75	FY '81 vs. '73
Electric Power (kW)	219,284,389	199.916,823	199,598,121	−8.8	−0.2	−9.0
Total Fuel gallons)	7,745,813	6,867,237	6,514,427	−11.3	−5.2	−15.9
#2, 4, 6 fuel oil	7,233,475 (93.4)	5,380,720 (78.4)	4,118,442 (63.2)	−25.6	−23.5	−43.1
ALF	259,061 (3.3)	1,222,477 (17.8)	2,135,473 (32.8)	+371.8	+74.7	+724.3
Propane	71,570 (0.9)	87,880 (1.3)	84,532 (1.3)	+22.8	−3.8	+18.1
Gas & Diesel	181,707 (2.4)	176,160 (2.6)	175,980 (2.7)	−3.1	−0.1	−3.2
Total Energy (BTU)	$3,611\times10^9$	$3,257\times10^9$	$3,106\times10^9$	−9.8	−4.6	−14.0
Energy Expenses ($)	3,234,009	7,229,555	16,949,840	+123.5	+134.5	+424.1

*includes experimental usage
**where appropriate

Energy Challenge (Cont'd)

close to retirement in other structures.

According to Engineer Ed Murphy, the combined cycle plant was one of six different schemes evaluated and was recommended largely because of its capacity to generate 11-1/2 megawatts of electricity and to produce steam at the rate of 50,000 pounds per hour (see diagram).

Typical steam requirements for BNL range from 60,000 lb/hr in the spring and fall, to 120,000 lb/hr in the summer, up to 180,000 lb/hr during the winter. The combined cycle plant would come close to meeting the Lab's base load requirements for steam. Further, it would operate at nearly double the efficiency of a utility generating station by taking advantage of the thermodynamics of its cycle to generate electric power as well as steam. Conventional central station power plants have roughly 35% efficiency; the combined cycle plant would be in the 70% range.

Right now, "We do not generate any power on site — aside from emergency power," said Murphy. "It simply didn't pay to build a cogeneration plant when energy was cheap. If you remember, as recently as three years ago we were paying 3¢ for a kilowatt hour. Now it's hovering around 7¢ from LILCO."

If the proposed cogeneration facility receives DOE approval, construction would start in FY'84 at a location near the existing steam plant and would be completed by mid-1987 when,

Doug Humphrey

Ed Shelton (left) and Mark Culp

said Murphy, "We are anticipating our electrical consumption will have increased by about 70%." This projected rise is based on the full commissioning of both the NSLS and ISABELLE. "This is one of the factors that made us look in this direction," said Murphy. "It is also why we can look at this plant, LILCO and PASNY together."

The cogeneration plant, which would run in conjunction with the Lab's existing power contracts with both LILCO and PASNY, is estimated to cost about $19 million (adjusted for inflation). Under current economic conditions, the project would pay for itself in 4.2 years. — Anita Cohen

Guacci Heads Supply & Materiel

Michael Guacci has been named manager of the Supply & Materiel Division, replacing Phillip Borzi. Borzi, who was manager of Supply and Materiel for the past 15 years, has transferred to the Business Manager's office, where he will carry out special studies and analyses.

Guacci is a long-time veteran in the division, having joined it in 1960. Starting in the warehouses, he progressed through the ranks as requisition supervisor, inventory control officer, and finally assistant division manager for the last 12 years.

During his first years at the Lab, Guacci went to night school and earned an associate degree in business management. Nearly 20 years later, he went back to school again for computer courses, part of his effort to keep abreast with IPAP, a computerized integration of purchasing, accounts payable, receiving and inventory functions recently undertaken at BNL. Representing Supply and Materiel, Guacci was part of the IPAP development team.

Receiving is now using IPAP. Inventory control and stockroom operations will be next. Guacci says, "With the help of IPAP, I'm going to try to implement some innovations that will

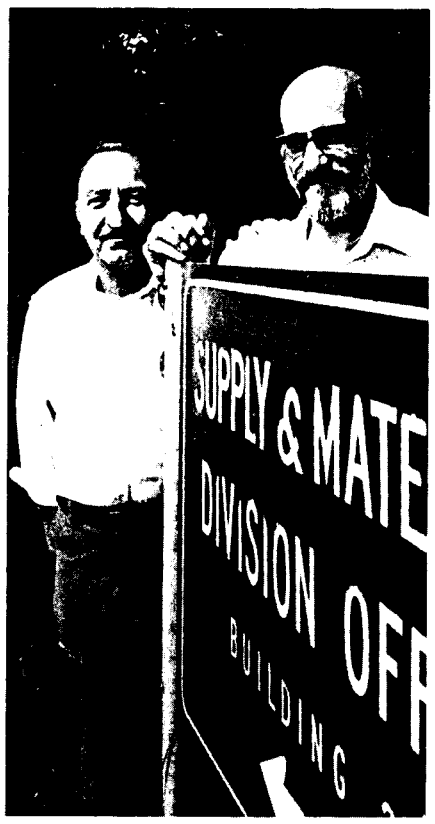

Doug Humphrey

Phillip Borzi (left) and Michael Guacci

make the division more responsible to the needs of the Lab."

Keep It Short

If phone bills get you down, consider the fact that the Lab's phone bill for March totalled $146,000. Of that amount, about 60% is fixed. Just over $74,000 is the monthly rental charge for equipment, including trunks, cables, phones and so on. Another 10% pays for new phone installations and moves.

It's the other 40% that you can help reduce. Bill Webster, manager of the Staff Services Division, estimates that just shortening every toll call by one minute could reduce a $146,000 bill by $11,000. As much as $5000 of that would come off of the FTS bill of $32,000 per month. The New York Telephone Company's monthly bill of $25,000 could be lowered by $6,100. Of that, $3,500 would come off the $14,000 charge for the 80,000 local calls placed monthly from BNL.

Another way to reduce toll expenses is to be sure to use FTS instead of the New York Telephone Co. lines. Webster says, "About 24% of our long distance calls are going out on Bell rather than FTS." Phones programmed for Treatment I will automatically switch an FTS call to a New York Telephone line if there is no FTS trunk available. To avoid being switched, try not to call during FTS' busiest hours — 10:30 a.m. to noon and 2 to 3:30 p.m.

Buckle Up

All BNL employees should be advised that it is now required that any driver or passenger riding in a government owned vehicle, or a private vehicle on government business, must wear a safety belt (seat and shoulder) at all times. This safety precaution is taken in compliance with a recent Transportation and Public Utilities Service directive.

Patent Awarded

U.S. Patent #4,309,249 has been issued to Meyer Steinberg, DEE, and James R. Powell, Hiroshi Takahashi, Pierre Grand and Herbert Kouts, all in DNE, for inventing a device for producing fissile material inside of fabricated nuclear elements so that they can be used to produce power in nuclear power reactors.

The nuclear power industry today is mainly based on light water-cooled thermal burner reactors (LWR's). These reactors have proven performance in providing reliable and economical power, and they supply more than ten percent of the electric power generated in the United States today.

The natural uranium which can be economically recovered in the U.S. has been estimated to be about 1.5 million tons. Therefore, only 240,000 million watts of nuclear power would be supportable. Yet a number of conservative estimates put the U.S. need for power in the next couple of decades at somewhere in the neighborhood of 1,000,000 million watts. Despite the current slow down of nuclear power utilization, it is projected that in the future, nuclear reactors will share this requirement with other power sources such as coal, oil and solar, especially considering the fact that this country will eventually run out of fossil fuels.

Based on these values, LWR's supplied by the present nuclear fuel cycle cannot be considered as a long-term solution to the energy problem. The fast breeder reactor (FBR) has thus been put forward as a necessity in insuring the long term establishment of a nuclear-fueled economy. With the FBR, the U.S. uranium resource can ultimately be extended two hundred times the present value, and essentially an unlimited energy source then becomes available. However, FBR's have a number of drawbacks: the fissile material concentration is much higher than in LWR's, FBR's require new and higher unit capital investments and new safety regulations and precautions, and reprocessing of fuel from FBR's is an absolute necessity..

As an alternative to reprocessing, the BNL invention recently patented provides a method of enriching fuel elements in a neutron source, linear accelerator. After the fuel elements are used in a nuclear reactor, they would be returned to the accelerator for regeneration and then recycled.

As proposed by the invention, fuel elements are placed in pressure tubes in a vessel surrounding a liquid lead-bismuth flowing columnar target. A linear-accelerator proton beam enters the side of the vessel and impinges on the dispersed liquid lead-bismuth columns and produces neutrons which radiate through the surrounding pressure tube assembly or blanket containing the nuclear fuel elements. These neutrons are absorbed by the natural fertile uranium-238 elements and are transformed to fissile plutonium-239.

The fertile fuel is thus enriched in fissile material to a concentration whereby it can be used in power reactors. After use in the power reactors, dispensed depleted fuel elements can be reinserted into the pressure tubes surrounding the target, and the nuclear fuel regenerated for further burning in the power reactor.

Since this patent was issued, the BNL researchers have improved on their invention by designing an accelerator that not only regenerates nuclear fuel but also produces it. Called the Spallator, it is based on advancements in accelerator technology and on spallator reactions. Early experiments at the BNL Cosmotron were the basis of spallator reactions. The Spallator would be a self sufficient facility which produces nuclear fuel for the thermal power reactors presently operated by the utility industry, particularly the light water reactors.

In Memoriam

Anthony J. Guacci, Resident Services Supervisor, died on June 29 at the age of 68. Guacci had been employed at the Lab since March 24, 1947. He resided in Selden and is survived by his wife, Antoinette, and two sons, Michael, Manager of Supply & Materiel, and Rocco of Selden.

Do. umphrey

Emerging from the major facility hall on the ISABELLE site is Michael Kelley (center) DOE's Deputy Assistant Secretary for House Liaison. On a visit to the Lab June 29th, he was escorted by Lab Director Nicholas Samios (right) and Associate Director Martin Blume. Mr. Kelley also spent some time at the National Synchrotron Light Source and the High Flux Beam Reactor.

BROOKHAVEN BULLETIN

Published weekly
for the employees of
BROOKHAVEN NATIONAL LABORATORY

BERNICE PETERSEN, Editor
MONA S. ROWE, Assistant Editor
ANITA COHEN, Reporter

35 BROOKHAVEN AVE., UPTON, N.Y. 11973
Telephone (516)282-2345

Craft Deadline Coming Up

Only one week is left to get your application in to the Craft Apprenticeship Training Program. Four openings — two in the machinist trade and two in refrigeration and air conditioning — are now available to eligible employees. Applicants to the four-year program must be bargaining unit employees in the sixth labor grade or below, or weekly nonbargaining unit employees at level three or below, whose rate of pay is no highter than the going rate of labor grade six. See the receptionist in Personnel for applications, and if you wish to talk to someone about the program, call William Hempfling, Ext. 2878, or Marsha Kipperman, Ext. 2871.

More T-Shirts

T-shirts commemorating "Brookhaven National Laboratory-Summer '82" are again being made available to all employees, students and guests for only $5 each, including tax. The T-shirts are royal blue with white printing and are made of 50% cotton and 50% polyester for minimum shrinkage. They are available in unisex adult sizes: small (34-36), medium (38-40), large (42-44), extra-large (46-48); and unisex children's sizes: small (6-8), medium (10-12) and large (14-16).

T-shirts must be ordered on or before July 30, and each order must be accompanied by payment in the form of either cash or a money order made payable to "Renee Flack - T-shirts '82." No personal checks please. Bring or mail orders and payment to Renee Flack, Room 112, Bldg. 460 (Ext. 3316.) Allow two weeks for delivery.

The Late Garden

It's not too late to replant some vegetables that faired poorly in this spring's cool, wet weather, according to the Cooperative Extension Association of of Suffolk County.

By knowing the number of days to maturity for vegetable varieties, you can calculate the final planting dates. Just count back the number of days from the average first frost date (about October 15 in Suffolk County). For instance, bush beans, cucumbers and summer squash usually mature in about 60 days. Adding a few days for extra growth time in cool fall days would make the last planting days July 15-25. Using this method, July 10 would be the last day to set out very early tomato varieties, such as New Yorker or Fireball, and July 1-15 would be the last days for setting out these plants: cabbage, cauliflower, broccoli, Chinese Cabbage.

Final days for seeding in the garden would be: June 15-July 1, Chinese cabbage, parsley; June 25-July 15, Swiss chard, carrots, endive, parsnips; July 10-25, beets, collards, kale, kolhrabi, mustard, Chinese radish, rutabagas; July 25-August 10, leaf lettuce, turnip; August 10-September 5, radishes.

Doug Humphrey

One avenue open to non-bargaining unit employees who need a "listening post" or an objective opinion is the Employee Relations Committee. Lab Director Nicholas Samios recently appointed three new members — Patricia Fox, DEE; Madeline Windsor, TID; and Edward McFadden, Jr., Applied Math — to a two-year term on the Committee. Pictured above are Committee members (from Left) Irene Steele, Biology; Edward McFadden; Patricia Fox; Roger Bailey, Plant Engineering; Chairman John Keane, Accelerator; and Madeline Windsor. Also on the Committee is Vincent Lo Destro, Accelerator. Employees may contact any member of the Committee if they have a matter they wish to discuss.

Don't Do It!

A posed photo in last week's Bulletin showed firefighters Jim Yerry and Richard Richard rehearsing cardiopulmonary resuscitation (CPR) on Jim Forkin, who was simulating a cardiac arrest. Yerry tested the BNL Fire Department's oxygen equipment while Richard assumed the CPR position for administering cardiac compression. Of course, Richard knows that this technique should **never** be performed on a person whose heart is still beating, so no actual compressions took place.

Bowling

Priority applications for next season must be submitted by July 12 to the BERA Sales Office. For additional information contact Rich Larsen, Ext. 3464, John Connelly, Ext. 3284 or Carol Beckner, Ext. 3138.

Safety Shoes

The Safety Shoes office, located at 14 S. Railroad St. (Building 88), will be closed the week of July 12, and will re-open Monday, July 19.

Bus Stop

Until July 29, buses will run every Wednesday and Thursday between the bus stop in the apartment area and Port Jefferson Village or Smith Point Park, according to the following schedule:

Trip to Port Jefferson Village
Leave BNL at 10:00 a.m.
Leave Port Jefferson Village at 2:00 p.m.
Arrive at BNL by 3:00 p.m.

Trip to Smith Point Park
Leave BNL at noon.
Leave Smith Point at 3:30 p.m.
Arrive at BNL by 4:00 p.m.

Fares will be $1.50 round trip for adults and $1.00 round trip for children 12 and under.

This is a pilot program and will be continued into August if the response is good.

Arrivals & Departures

Arrivals

W. Gary Adams ... Safety & Env. Prot.
Min-Tsong Chang ..... Nuclear Energy
Abbe H. Jamner ..... Applied Math
Ronald N. Shiotsuka ..... Medical
Martha N. Simon ..... Biology
Siu W. Tong ..... Biology

Departures

This list includes all employees who have terminated from the Laboratory, including retirees:

Pushpito K. Ghosh ..... Chemistry
Willie H. Campbell ..... S & M

Mort Rosen

BNL employes browsed through tables laden with fresh fruits and vegetables last Friday at the first of a series of farm markets to be held in the parking lot next to the theatre on Brookhaven Avenue every Friday from 11:30 a.m. to 1:30 p.m. until October 29th. Local farmers sold lettuce, cauliflower, rhubarb, zucchini, raspberries, strawberries, pies, jams, homemade bread and a variety of other products this past week, and will be selling whatever produce is seasonal in the future. Many of the customers at the first market had favorable comments on the quality and freshness of the purchases.

Cast Call

The Theater Group's fall production will be "The Odd Couple," directed by Jane Love. In addition to the two major male roles (Oscar and Felix), there are modest-sized but interesting character parts for four men (Oscar's playing buddies) and two women (English sisters). Newcomers are warmly welcomed. This is a good opportunity to take part in the fun and excitement of putting on a play without undertaking a major role.

Try-outs will be held in the North Room of the Center at the following times:

Tuesday, July 20, 8:00 - 10:00 p.m.
Wednesday, July 21, 5:30 - 7:30 p.m.
Monday, July 26, 5:30 - 7:30 p.m.
Thursday, July 29, 8:00 - 10:00 p.m.

It is not necessary to do any preparation for the try-outs, but if you want to look over a script, contact Bob Kinsey, Ext. 5096, or Penny Baggett Ext. 5154.

There are lots of offstage jobs to be filled also. If you would like to help, contact producer Lori Eagle, 286-8407, or come to the try-outs.

Rehearsals will start after Labor Day, and the performances will be on October 15, 16, 22 and 23.

The next Theater Group meeting will be on Wednesday July 21 at 8 p.m. in the North Room of the Center, following the try-outs. Everyone is invited to stay for the meeting and socializing.

Softball

League II

Makeup game:
Roga 25 — Big Sticks 16

League IV

Makeup game:
Electric Co. 8 — Medical 4

Both teams displayed good defense in an evenly played game. Electric Co. is the first half leader in League IV.

League V

E-Z Riders 13 — Survivors 9

The E-Z Riders triumphed over the Survivors in a game that was well-played by both teams. Alas, the end of a 4-year winning streak for the Survivors.

League VI

Makeup game:
Who's On First 21 — No Feedback 9

Dave Gordon and Bonnie Bittner, made some spectacular plays and Vinny Lettieri's home run helped the Who's On First win against No Feedback.

Cafeteria Menu

Week Ending July 16

Monday, July 12		
Cream of mushroom soup	(cup)	.65
	(bowl)	.75
Western omelet & hash browns		1.75
Kielbasi & sauerkraut		1.85
Hot Deli: Baked Ham	(bread)	1.80
	(roll)	1.09
Tuesday, July 13		
Beef barley soup	(cup)	.60
	(bowl)	.70
Cheddar cheese steak & 1 veg		1.80
BBQ spare ribs & black-eyed peas		1.90
Hot Deli: Roasted turkey breast	(bread)	1.80
	(roll)	1.90
Wednesday, July 14		
Turkey okra soup	(cup)	.60
	(bowl)	.70
Sauerbraten w/potato pancake & red cabbage		2.10
Stuffed cabbage & 1 veg.		1.80
Hot Deli: Sausage & pepper hero		1.90
Thursday, July 15		
Pork & cabbage soup	(cup)	.60
	(bowl)	.70
Beef Stroganoff on egg noodles		1.90
Baked lasagna & 1 veg. & garlic bread		1.85
Hot Deli: Sandwich steak w/pepper & onions	(bread)	1.85
	(roll)	1.95
Friday, July 16		
Clam & celery bisque	(cup)	.65
	(bowl)	.75
Macaroni & cheese & 1 veg.		1.80
Southern fried chicken & 1 veg.		1.80
Hot Deli: Corned beef on rye		1.80

Classified Advertisements

Placement Notices

The Laboratory's placement policy is to select the best-qualified candidate for an available position, with consideration given to candidates in the following order of priority: (1) present employees within the department, with preference to those within the immediate work group; (2) present employees within the Laboratory as a whole; and (3) outside applicants. In keeping with the Affirmative Action plan, selection decisions are made without regard to age, race, color, religion, national origin, sex, handicap or veteran status.

Each week, the Personnel Office lists new personnel placement requisitions. The purpose of these listings is, first, to provide open placement information on all non-scientific staff positions; second, to give employees an opportunity to request consideration for themselves through Personnel; and, finally, for general recruiting purposes. Because of the priority preference policy stated above, each listing does not necessarily represent an opportunity for all candidates. As a guide to readers, the listings are grouped according to the anticipated area of recruitment.

Except when operational needs require otherwise, positions will remain open for one week following publication date.

For further information regarding a placement listing, contact the Personnel Placement Supervisor, Ext. 2882.

The vacancies listed below have been exempted by the Director's Office from the current freeze on open requisitions.

LABORATORY RECRUITMENT: Opportunities for present Laboratory employees.

1718. CLERICAL POSITION - To process medical and other benefit claims and assit employees with related problems and questions. Candidate should have extensive office experience, ability to organize work, excellent communication skills and familiarity with insurance claims processing. Personnel Division.

OPEN RECRUITMENT: Opportunities for present Laboratory employees and outside applicants.

1719. ENVIRONMENTAL SCIENCE ASSOCIATE - Requires MS in a numerate or engineering discipline complemented by a background in biology. Experience in the use of computer analysis techniques and a knowledge of techniques for modeling of environmental pollutants in the environment is desirable. Duties include analysis and interpretation of data related to a variety of energy environmental assessment problems. Department of Energy & Environment.

Autos & Auto Supplies

VW BEETLE - top only, windows intact. You haul away. Laine, Ext. 2318.

76 VW DASHER - 4 door, auto, low mile, Ext. 2475 or 751-4539.

74 BUICK - radio, heater, good cond., $575. 399-2149.

79 CHRYSLER LE BARON - 2 dr., black w/gold interior, vinyl roof, loaded, low mileage, one owner, excellent, reduced to $4,200. 348-7884.

FIRESTONE TIRES - (2) A78-13, 4 ply, polyester, excel. cond., $30. 472-1397.

64 CHEVY PICK-UP - $300. Scott, 399-1157 or 281-1862 after 5 p.m.

72 CHEVY NOVA - 2 dr., V8, standard shift, good mpg, all new tires, clean. Ext. 2384 or 878-0074.

75 PLYMOUTH FURY - 55,000 mi., auto, new starter, battery, timing chain, clean, must sell, $1,475. Ext. 3027/4157.

TIRES & RIMS - (2) F78-14, on Volare rims, good for spares, $10 each. Glenn, Ext. 3336 or 472-1419.

74 CJ5 JEEP - blue, 6 cyl., new soft top (black), $2,500 firm. 399-2135 after 4.

79 HARLEY - low rider, 2,100 mi., dressed, excel. cond., $4,900. Ext. 3870 or 732-4590.

67 B-1200 INTERNATIONAL - 28,000 mi., steel dump body, 4 wheel drive, plow & plow hydraulic, V8/cap, new brakes, perfect cond., $4,300 firm. 567-5542.

74 OLDS DELTA-88 - a/c, p/b, p/s, high mileage, excel. cond., $850 or best offer. 586-6963.

SNOW TIRES - new with rims, (2) P165/80R13 w/w, steel belted radial, Sears Road Handler, $80. Ext. 5200.

CLASS II TRAILER HITCH - for 1976-79 T-bird and other Fords, $30. Otto, 472-0339.

69 DODGE CHARGER BODY - excel. cond., prime ready to paint, $250. 473-5890 after 5 p.m.

78 TRANS AM - 6.6 LT, gold, beige interior, p/s, p/b, de, am/fm 8-track, T-top, excel. cond., $4,995 firm. Roy, Ext. 4664 or 744-8779.

73 VOLVO 164 SEDAN - a/c, am/fm, automatic, reliable. 286-0422 eves.

TIRES -(2) E78x14, belted w/w, mounted on 14" Pontiac rims, $10 each. Ext. 4153 or 732-5829.

CHEVY RIMS - (4) 8 lug 10x16.5, white, $175. 732-7799 days.

80 TRIUMPH TR7 - white convertible, extras, 17,000 miles. J. Klein, Ext. 2294 or 298-8805.

79 HONDA - 50cc, 2.50 HP, excel. cond., $325. Ext. 3064 or 878-0516 after 6.

79 HONDA - CM400T, 2,000 mi., garaged, must sell, $1,000. 981-0181.

79 CADILLAC - white, black vinyl top, 4 door, fully loaded, immaculate, $6,500. John, 826-1463, after 4 p.m.

79 RABBIT - tan, 4 spd., excellent, well maintained, no dents, $3,500. Ext. 4228.

75 PONTIAC FIREBIRD - V8, new paint, special wheels, am/fm cassette, louvre rear window. A. Romano, Ext. 4024.

74 SUBARU DL - standard, 2 dr. sedan, new inspection, brakes, 30 mpg., like-new interior, 80K mi., $1,000 firm. Ext. 3578 or 878-4864.

SLIDE ON CAMPER - 8' bed pick-up, queen sz. bed, double bed, sink, 3 burner stove, refrig., TV ant., great cond., $1,200. 281-3205.

74 DODGE DART - auto. trans., new tires, new brakes, very good cond., $700, or best offer. Yuan, Ext. 3987.

79 PLYMOUTH VOLARE - 6 cyl., 4 dr., p/s, p/b, a/c, mint, $3,250. Ext. 4490 or 286-2155.

81 PONTIAC T-1000 4 door, like new, 8,000 mi., moving, must sell, $4,900 or best offer. 265-3612.

74 CAPRI - brown, w/black interior, best offer over $1,500. Ext. 4220 or 924-0585 after 6 p.m.

72 VW SQUAREBACK - a/t, good mileage, regular gas, best offer. Ext. 3600 or 289-8182.

65 YAMAHA MOTORCYCLE - 250cc, extra engine & misc. parts, $175. Linda, 929-3023.

79 HOND HAWK MOTORCYCLE - 400cc, almost new, asking $1,200. 588-0805 eves.

74 CHEVROLET STEP VAN - V8, 4 spd., refrig., insulated, fiberglassed, heavy duty front and rear, $4,000. 654-5169.

79 MGB CONVERTIBLE - (2) tops & hood cover, 32,000 mi., am/fm 8-track stereo, good condition in & out. 878-0516.

CAR STEREO - Craig T689, w/power amp, 4-spkr. balance, under warranty, $175. Eric, Ext. 2973 after 5 or 669-4845 during day.

80 SUZUKI 450L - leftover, purchased late '81, excel. cond., 600 miles, just serviced, extras, orig. cost $2,000, asking $1,600. 325-1024.

80 SUZUKI - GS1000L shaft drive, custom seat, luggage rack, many extras, warranty, $2,900. Ext. 7187 or 981-9474.

81 CHEVETTE SCOOTER - still under warranty, 2 dr., a/t, am/fm/tape, 6,000 miles, steel gray, radials, $4,400. 473-2473.

74 CORVETTE STINGRAY - brown, w/saddle interior, pin striping, T-top, a/c, p/w, am/fm stereo, 350 eng., low mileage, tilt steering wheel, best offer over $6,800. 248-1800 days or 399-1105 eves.

76 SUBARU DL 1600 - needs work, $1,200. 821-0599.

Boats & Marine Supplies

28' WOOD CABIN CRUISER - 1958, depth finder, best offer. 399-2149.

14' PHANTOM - (like Sunfish), 1982, hardly used, extras, best offer over $925. Ext. 3766 or 689-9392.

32 CHRISCRAFT - Sea Skiff twin 283 Chevys FWC, sleeps 6, camper canvas, good cond., $2,800. 286-8476.

18' GARVEY - 40 HP Johnson outboard, good cond., must sell, $750 for both. John, Ext. 3292 or Jeff, 286-1348.

1961 JOHNSON - 75 HP, runs well, $200. 363-6940 after 5 p.m.

22' GARVEY - with '75 40 HP Johnson, in excel. running cond., $700. 588-7224.

23 CHANNEL RCA CB - 8 ft. fiberglass antenna; laydown mount, quick release mount, all for $65. Carl, Ext. 4420.

Free

WOODEN STORM SCREEN WINDOWS - (5) 32x50-1/2, (2) 24x50-1/2, (2) 28x50-1/2, (1) 24x23; (2) storm doors. 567-5609 after 6.

SINK - & gas heating/cooking stove. Ext. 4230 or 472-0299.

(2) AFFECTIONATE CATS - 1-1/2 yrs. old, black female, grey male, both spayed. 473-5542 days.

PUPPIES - black & white, mother very good watch dog, great with children, puppies should be medium size, father a ???? Bob, Ext. 2310 or 268-9009 after 1400 daily.

Yard Sales

YARD SALE - July 9 & 10, 10 a.m. to 5 p.m., furniture, glass, etc., 290 Grove Ave., Patchogue.

TAG SALE - selling contents of home, handcrafted furniture, July 10 & 11, and 17 & 18, Pond View Dr., Wading River. 929-4855.

YARD SALE - baby items, stove, cabinets, windows, more, Saturday & Sunday, 10-4, 7 Broadview Ave., Bellport.

YARD SALE - house hopping community, oldies, goodies, collector's books, vintage typewriter, etc., freebies w/purchase, 7/11/82, 10 a.m. - 4 p.m., rain date 7/17/82, 7/18/82, 229 Main Ave., Mastic. 281-7302.

Miscellaneous

FIREPLACE AIR CIRCULATOR - very large, $10; tent, 2-person, handmade, Frostline, rainfly, poles & sack, backpack weight, $45. Laine, Ext. 2318.

TABLE - 34x34 adjustable, high/low, $25; 3 canvas director chairs, seats need replacing, good, $36; Scott spreader, $20; redwood bench, $5; 2-wheel shopping cart, $3; 2 garbage cans, $9; grey paneling, 4x8 odd sizes, formica, $12; (3) suit cases, $20; TV table, $5; flower pots, $.50 each. 472-1397.

POOL PUMP - 3/4 HP Marlow, working order, some rust, $25. 289-1883.

IRRIGATION PIPE - (3) 20' aluminum lengths, standard farm hookup; (3) 12" risers, no sprinklers, $65 all. Jack, Ext. 3260.

BIKE - 3 speed Columbia, good cond., $30; girl's 20" Ross bike, excel. cond., $45; 55 gal. fish tank, stand, fluorescent lights, supreme, 600 filter system, silent giant heater, gravel/rocks, $100. 924-6613.

DINETTE - 5 pieces, good condition. Joyce, Ext. 4215 or 369-2849 eves.

SOCKET SET - new 1/2" 18 metric sockets, sliding "t", speed handle, 5" and 10" extensions, 10" rachet, u-joint, box, $32. 878-0717.

PERSIAN RUGS - Turkomen, Tribal, 9'x12', $1,000 each, others all primarily wine red, handmade; Mideast art, decorator panels, (2) hand-painted split doors, (2) panels, each 18"x72", scenes, flowers, animals, unique, reduced to $500 ea. 348-7884.

BIKE - women's 5 speed Huffy, 27" wheels, like new, $65. 473-2861 after 6 p.m.

LAWNMOWER - Toro, 19", excellent; dining room table, chairs, china closet, buffet, oldie but good cond. Ext. 3392 or 475-8330.

COLECO POOL - 3'x12' w/ladder and filter, 2 yrs. old, good cond., $50. Tom, 286-1899.

CLEATS - Adidas, baseball/soccer, size 10, worn once, $10; floor fan, $5. Ext. 3604 or 878-0516 after 6.

REFRIGERATOR - antique, G.E., monitor top, $25. Ext. 4230 or 472-0299.

JALOUSIE PANELS - (6) with screens, 29"x55"; aluminum Jalousie storm door, 36"x6'8", $15/panel Otto, 472-0339.

GENTLE LADY GLIDER - 6 ft. wing span, 2 channel remote control, ready to fly, $75. 821-1525.

LIVING ROOM SET - sofa bed, 2 chairs, coffee table, 2 end tables, $200. Bob, 878-0598 or 878-0831 eves.

ORGAN - electronic with mini-synthesizer, special voices, 5 rhythms, 15 voices, orig. $995, now $495. Roy, Ext. 4664 or 744-8779.

STEREO - Sylvania console, am/fm 8-track, turntable, excel. cond., new, $300, asking $125. Ext. 2456 or 878-4152.

COLOR TV - 21", Zenith, $95. Ext. 4240 or 286-0295.

COAL STOVE - used one season, heats 1200 sq. ft., $900 new, best offer. 286-0422 eves.

WASHER - Frigidaire, large capacity, jet agitator, yellow, works well, asking $100. Ext. 2456 or 878-4152.

TWIN CANOPY BED - white, matching bedspread, canopy cover, pillow sham, priscilla curtain, $125 firm. 286-1416.

HEADSTROM UMBRELLA STROLLER - like new, $25. Richie, Ext. 2410.

55 GALLON DRUMS - used once for fresh water, two available, $20 each. Webster, Ext. 2525.

TOOLS - Proto automatic torque wrenches, 1/2", 3/8" & 1/4" drive, like new, lists for $200, sell for $100. 473-2059.

18' MARATHON POOL - 1/2 HP D.E. filter, solar & winter covers, with all accessories, 2 yrs. old. 929-6692.

HEADBOARD - brass plated, full size w/frame, $40; b/w portable TV, $25. Toni, Ext. 2907.

40 CH MOTOROLA CB - antenna hardly used, $50. Alex, Ext. 4704 or 928-1124.

WINDOW FAN - G.E., 24 x 30, $35. Josephine Ext. 4144.

WINDOWS/DOORS - wooden, double hung, stationary w/storms, metal & wooden storm doors. Bob, Ext. 7785.

BICYCLE - girl's 20", good cond. $30. Ext. 2616.

AQUARIUM - 20 gal. with all accessories, $25. Linda, 929-3023.

G.E. AIR CONDITION - 115 V, 6000 BTU, portable, on stand, $50. 878-1572 after 4 p.m.

WHIRLPOOL WASHER - like new, med. sz., $100 firm; freezer, uprite, 6'x3', old but runs well, $100. 924-6751 eves.

FLOOR LAMP - w/marble base and table, 1 piece, w/lamp shade, $35. Phil, Ext. 3500.

FISH TANK - 55 gal., fully equipped with pump and stand, $175. Ext. 7187 or 981-9474.

TECHNICS RECEIVER - SA-5070, Bic speakers, Bic turntable, moving, must sell, asking $400. 473-5542.

U.S. DIVER'S WETSUIT - men's medium, gloves and boots incl., like new, sacrifice, $75. Jeff, 732-3842.

SAMOYED PUPS - AKC reg. Michelle, 283-1338.

JALOUSIES - 5 windows, 42x80, 1 door 36x84, storms/screens, excel. cond., enclose a breezeway, $300. Ext. 2069.

BICYCLES - men's 10 spd., Peugeot, needs work, $50; lady's, single speeds, $20, $10. Lloyd, 325-0389.

MARIGOLD PLANTS - mixed colors, $1.00/doz. Bill Stars, Ext. 4278 at lunchtime or 298-9648 after 6 p.m.

STEREO - Emerson compact, am/fm, cassette recorder, turntable, 2 speakers, $130; 20", 3 spd. fan, $20; Norelco coffee maker, $12; hairdryer, $5; playpen, like new, $20; baby swing-o-matic, $5; baby scale, $5; toaster, all in very good cond. Ext. 3107.

Real Estate

Real Estate advertised for sale or rent is available without regard for the race, color, creed or national origin of the applicant.

For Sale

OLD STONY BROOK - North, 100 yds. to beach, energy efficient, totally restored, 2-3 bedrooms, 1-1/2 baths, basement, brick patio, 2 car garage, fence, $1,100 taxes, $86,900. Ext. 2145.

RIDGE - 2 bdrm. house on 100x100, deck, fireplace, lake rights, $34,000. 929-6034.

EASTPORT - mobile home, adult park, 50'x12', 2 bdrm., washer/dryer, large porch, sacrifice, $6,500. 325-1499.

MIDDLE ISLAND - 1 bdrm. condo., l/r, d/r, w/w, central air, 5 appliances, balcony, pool, tennis, 10 min. to Lab, $18,000 mortgage, $26,500. Ext. 3734 or 924-0035.

RICHMOND, RHODE ISLAND - wooded building lot, 1.13 acres on Rt. 2, ideal for split-level or earth-burm home, $9,000, very low taxes. Steve, 728-9165.

WADING RIVER - custom built, 4 bdrm. colonial, 2 baths, d/r, den, f/p, 2 car garage, full basement, private beach. Ext. 7727 or 929-4631.

RIVERHEAD - mobile home, R&R Family Park, 12'x50' with 12'x15' master bedroom extension, 3 bdrm., 2 sheds, deck, $15,000. Dave, Ext. 7922 or 369-1792 before 8 p.m.

PATCHOGUE - 4 bdrm., 2-1/2 bath, large eik, finished den w/fireplace, cathedral ceilings, central air, decks, double garage, 1/2 acre on cove, $115,000. 289-5811.

CONDOMINIUM - Birchwood at Blue Ridge, 15 min. from Lab, 3 bdrms., many extras, facing golf-course, low 60's. 698-7213.

POCONOS - prime time-sharing vacation condominium, sleeps eight, full amenities, golf, racquet club, skiing, stables, canoes, playhouse, indoor/outdoor pools, clubrooms, gourmet dining, world wide trading, $8,800. Mark, 265-3513.

SHOREHAM/WADING RIVER - 4 bdrm. colonial on acre, Axeman-Anderson boiler, 12" insulation, full basement, deck, quiet location, mortgage assumable at 10%. Linda, 929-3023.

For Rent

BERKSHIRES CHALET - 3 hrs from NYC, 3 bdrms., 2 baths, fully equipped kitchen, electric heat, deck with spectacular view, near lake, hiking trails, available weekly or weekends. 929-6946 after 6 p.m.

N. PATCHOGUE - brand new studio apartment, full kitchen, bath, private entrance, cablevision, w/w carpet, must see. Carol, 289-3917.

COLONIAL WOODS - new 3 bdrm. townhouse, 10 min. from Lab, w/w, 5 new appl., Blue-Ray III, swimming, tennis, $550/mo., avail. July 14. Ext. 3591 or 265-0501.

BROOKHAVEN HAMLET - mid-July, mid-Aug., rent neg. Ext. 3053 or 286-0612.

FLORID - Spring Hill, near Tampa, house for rent by week or month, golf, tennis, lake, 5 mi. to Gulf, 90 mi. from Disneyworld. Ext. 4530 or 261-2719.

Lost & Found

FOUND - key in the area of scrapyard. Pat, Ext. 2300/2309.

Wanted

MOTORCYCLES - bent or broken, any age or condition. Kevin, 281-8031.

PICK-UP - Van, Carryall, Suburban, etc., will consider full size station wagon, around $500 or les. Ed, Ext. 4447 or 821-1783.

APARTMENT - one or two bedroom, Islip/Great River/Oakdale/Sayville. A. Farrell, Ext. 4393 or 422-3208 after 6 p.m.

EXERCISE BICYCLE - with tension knob, good condition, reasonable. Ext. 2352 or 473-9016.

PARROT CAGE - 36" or larger. 732-0012.

LENS - Minolta 28 mm; Tripod to fit Minolta SRT 201 camera. John, Ext. 3292 or 286-1348.

TENNIS BALL BASKET - with auto pickup & stand-up legs; tires - 650-13, C78-13, 700-13 in good to fair cond. Susan, Ext. 4267.

UTILITY TRAILER - with four ft. wide bed, approx. $100 to spend. 924-6751.

MOORING SET-UP - for 30' boat. Carl, Ext. 3499 or 928-6944.

Car Pools

WANT TO FORM - two man car pool from Long Hill area of Stony Brook. Ext. 7110.

PATCHOGUE VAN POOL - one seat open, leave name and number at Ext. 3284.

Services

Services are listed as a courtesy to BNL employees. They are neither screened nor recommended by the Bulletin.

ATTIC - ceiling & bathroom fans installed. Joe, 399-0864.

TUTORING - experienced in learning disabilities, math & reading. Carol, 929-3529.

EXTERMINATING - licensed men, all phases of pest control and termite specialists. No job too small. Free estimates. 281-5445.

HOUSE PAINTING - interior, professional quality materials, insured. Bob, 289-7657 after 6 p.m.

YARD MAINTENANCE - lawn cutting, clean ups, N. Shore, Pt. Jeff. to Rocky Point. Bob, Ext. 2517 or John, 331-3358.

TAPING SPACKLING - free estimates; experienced. Bill, 286-8185 after 5:30 p.m.

ASPHALT PAVING & SEALING - Bob, 475-4382.

BABYSITTING - leave your child secure and happy. Lots of love, learning experiences, other children, stories, music, age 1-4, non-smoker. Pat Hein, 744-6210

PLUMBING AND HEATING - Lab discount. John, 654-8189.

HOME IMPROVEMENTS - vinyl and alum. siding, alum. trim, roofing, gutters, and leaders, custom carpentry, free estimate. Charlie, 744-3160.

VERTICAL BLINDS - miniblinds, wovenwood shades, discount prices, completely installed, shop at home service. Tony, 928-9241.

BOAT ALARMS - package includes control panel, key switch, speaker, 4 mag. switches, wire, $149.95, installation available. Richie, 924-5329.

ALARM SYSTEMS - material only, or have it installed, custom system. 399-3806, free estimate.

CUSTOM MADE CAKES - for all occasions, weddings, graduations, great variety, delicious, very reasonable. Judy, 929-6063

Classified Ad Policy Deadline is 4:30 p.m. Friday for publication Friday of the next week.