BROOKHAVEN BULLETIN
Vol. 37 - No. 47 December 9, 1983
BROOKHAVEN NATIONAL LABORATORY

How Rare Is the Air in There?

A homeowner in Wisconsin wants proof that his weatherization will conserve energy by reducing air infiltration from the outside of his drafty old house. A Connecticut woman in her "tight" new energy-efficient home wants to know if the indoor pollution from her wood stove in the first floor living room is affecting the air quality of the second floor nursery. Chemical engineer Russell Dietz, DAS, aims to answer the energy conservation and indoor air pollution queries for 10 groups of homeowners this heating season using his BNL AIMS.

AIMS (Air Infiltration Measurement System) uses steadily emitted amounts of fully-fluorinated cyclic alkane compounds to trace actual infiltration of fresh air into a house, or the mixture of air among floors as it normally occurs in an occupied house.

"All the air in a typical home is exchanged once every two hours on average," says Dietz. "If the source of pollution is inside the home, such as a gas or wood stove, then the concern is what happens to indoor air quality when you make a home tighter. Attempts to reduce heat loss through a reduction in air infiltration will unfortunately increase the occupants' exposure to internally generated pollutants. While there are outdoor air quality standards, there are no such standards within the home."

For more than ten years, Dietz worked on tracer compounds, and sampling and analysis instrumentation for outdoor air pollution monitoring. He developed the analysis techniques for three perfluorocarbon (PFC) compounds, now being successfully utilized in the field because they are found in sub-parts-per-trillion concentrations in the ambient atmosphere, are reasonably inexpensive, and are sensitively detected by electron-capture chromatography.

"One day someone in the DOE office in Washington asked me if I could possibly use my outdoor tracer system indoors to measure rates at which air leaks into building," says Dietz. "Though other methods were being employed, he thought that my technique would be simpler and more useful."

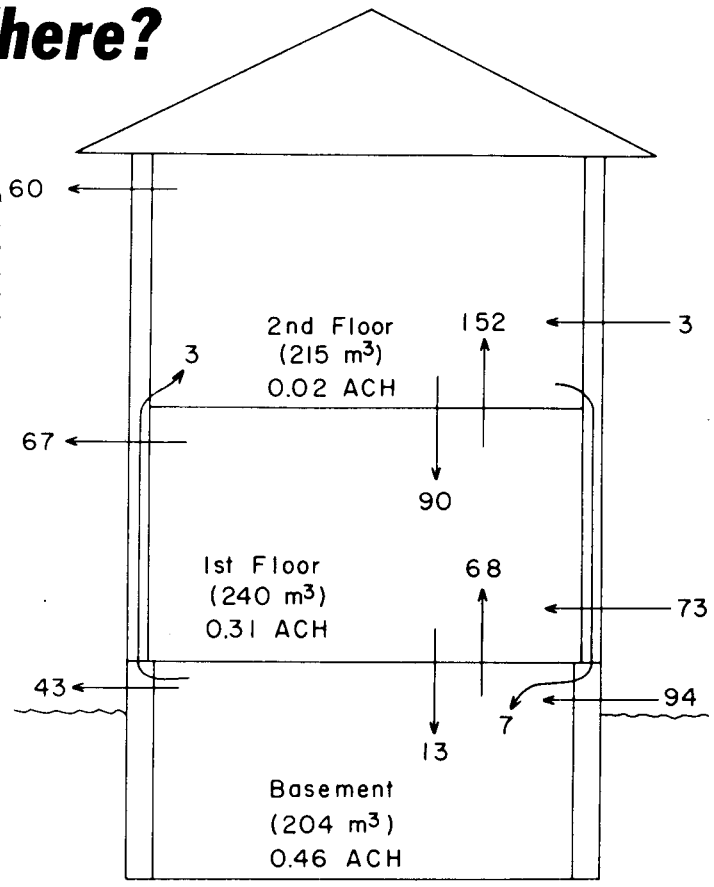

The air infiltration rates (in m^3/hour) and number of air changes per hour (ACH) from a three zone AIMS experiment at the Brookhaven House. In mid November, Theodore D'Ottavio, DAS, plans to release nitrogen dioxide gas in the Brookhaven House to simulate emissions from use of a gas stove, and to see at what rates the different structural and interior materials of the three floors remove the gas. For the entire heating season, the Brookhaven House will be compared with two older homes in a multizone AIMS study measuring the air infiltration rate on the different floors of each home biweekly.

Taking the suggestion, Dietz began experimenting with his tracer technique in November of 1979 within his own home. Using the tracer source with a programmable sample collector, Dietz determined that the fresh air infiltration rate increased by 2.5 times when his open fireplace was in use. After installing a wood stove within that fireplace, Dietz repeated his air infiltration test, and learned that the effect of the operating wood-burning stove was negligible on the infiltration rate.

Since then Dietz has used AIMS in 15 groups of homes, and has proved it convenient for implementing wide-scale air infiltration and exchange measurements. "One of the beauties of this technique is that I don't have to go into the field, I just send the AIMS kit with instructions," comments Dietz.

The tracer source, a miniature permeation device, looks like the broken-off top of a pencil with a worn-down eraser. Its aluminum cylinder is filled with about half a milliliter (ml) of PFC liquid; the rubber end plug allows the vapors above the liquid to permeate through at a constant rate of about 20 nanoliters per minute, sufficient for detection but slow enough for the device to last two to seven years. When the tracer gas is released into a room, it mixes uniformly in less than five minutes.

The sample collector is a small glass tube, about the size of a cigarette, with adsorbent charcoal lodged in the middle; caps at each end are removed and replaced to begin and end sample collection. Tracer molecules diffuse down the tubes at a constant rate equivalent to pumping air at 8 ml per hour. Robert Wieser, DAS, manufactures the AIMS tracer sources and sample collectors to emit and pump, respectively, according to Dietz's specifications.

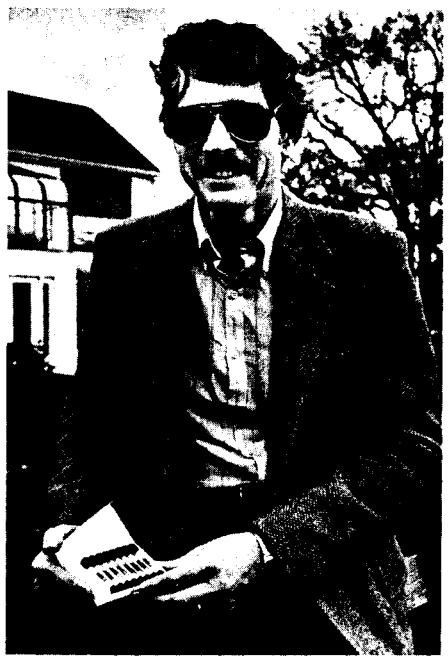

Alex Reben

Russell Dietz and his tracer samplers.

Dietz has the homeowner place his source vials along walls shared with the outside of the house, one vial per 500 square feet. This placement allows the tracer gas to mix thoroughly with the infiltrating fresh air, ensuring uniform concentration throughout the house. The homeowner is then directed to locate the collector tubes along inside walls, at least 10 feet from the sources, in rooms at extreme corners of the house to obtain representative

(Continued on page 2)

Alex Reben

The companies which are represented in the Industrial Research Institute (IRI) share a keen interest in research and development and a recognition that one way to serve this interest is by fostering cooperation between national laboratories and industry. For an introduction to the information and experimental resources available here, representatives of 38 IRI companies participated in an "IRI Spotlight on Brookhaven" on November 29-30. The attendees visited the Light Source; heard a summary of activities in the Department of Applied Science (DAS), an overview of BNL's work in superconductivity and individual presentations on such technologies as polymer concrete and catalysis; and received abstracts outlining the work of other Lab researchers. At the session's end, IRI members were invited to meet one-on-one with BNL staff. Here, Bill Marlow (left), DAS, meets with Lyle Hoppie, Eaton Corporation. Marlow's theoretical calculations on very small particles and molecular clusters in the gas phase (aerosols) could be relevant to an Eaton-manufactured, charged molecular cluster beam machine.

Danby Wins N.Y. Academy Award

Gordon Danby, Senior Physicist in the Accelerator Department, is the recipient of the 1983 Boris Pregel Award for Applied Science and Technology. He received the award at the annual meeting of the New York Academy of Sciences on December 7 in New York. Walter Scott, president of the Academy, presented a certificate of citation and $1,500 to Danby for his contributions in accelerator physics and superconducting magnet technology.

As noted by the Academy in a press release, Danby "is responsible for providing the basis for the creation of new high energy synchrotron machines in the United States, Europe-CERN and Japan. This work has included the design of magnets for beam transport, design innovations in quadrupole structures and the construction of unique types of septa, sector magnets. In 1973, Dr. Danby constructed two 'identical' 4 Tesla superconducting dipoles for the fast external proton beam to the neutrino target [at the AGS]."

The Academy also pointed to Danby's mapping of magnetic fields, precise orbit tracing, and the original idea of building FermiLab's accelerator as a separated function machine.

Canadian-born and educated, Danby has pursued his professional career at the Lab since 1957. He thinks of himself as a builder and he likes to build devices for a reason, and that reason has been high energy physics. "The bulk of my energy has gone into support of the excellent science done at Brookhaven," he says. And he is still trying to build. At present, he is bringing his considerable creativity to bear on the best machine to put in the CBA tunnel, and on plans for the super collider.

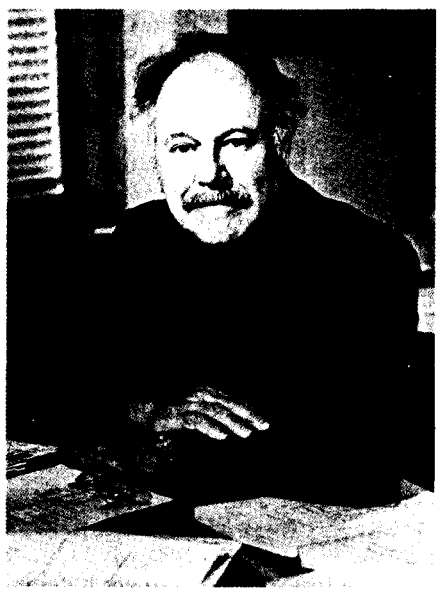

Mort Rosen

Gordon Danby

Even Danby's "hobby" is noted by the Academy. This is the invention (with Jim Powell, DNE) of a magnetic levitation suspension which the Japanese have made the basis of this type of high speed rail transport. Just last month, Danby and Powell went to New York at the invitation of the Japanese National Railroad to view films of that country's latest 3-car train, which they will now build full scale. "It works beautifully," says Danby, "and Powell and I are very pleased that the Japanese credit us with pioneering the concept. We still tinker and have a few ideas in the backs of our heads."

As to how he's going to spend his $1,500 award, Danby says "either on a short vacation, or a new roof." Odds are on the vacation.

Banking on Blood

Circle one answer to each question:

1. To which group does your blood belong?
   - *A) abundant*
   - *B) bountiful*
   - *AB) above & beyond*
   - *O) overflowing*

You're just our type. Give blood.

2. Which Rh factor does your blood have?
   - *+) are you positively positive?*
   - *−) negative is a plus!*

Make your blood count. Deposit it in a blood bank.

During banker's hours of 10 a.m. to 3 p.m. on Monday and Tuesday December 19 and 20 in the gymnasium, you may donate blood to the Long Island Blood Services of the American Red Cross during the BNL winter blood drive. Last year 23% of the Lab's workers voluntarily rolled up their sleeves and contributed 713 units of blood. This year, chairman Leonard Emma and program coordinator Elaine Zukowski hope that 30% of BNL employees will choose to invest in their community by donating blood.

"When I became blood drive chairman in 1980, I had never given blood," admits Emma. "But I was drafted into giving blood as part of the job. Now I volunteer to give blood, and find it easy and rewarding." Emma, who has AB+ blood, has donated almost a gallon during past BNL blood drives.

Emma and Zukowski point out that there is no risk of contracting Acquired Immune Deficiency Syndrome (AIDS) by donating blood through the Red Cross. While AIDS can be transmitted through the transfusion of blood, it cannot be gotten through blood donation. The healthy blood donor is safe from infection and is ensuring that those who need blood transfusions will be receiving healthy blood.

Blood donors will be treated to juice, coffee, cookies, and donuts during the drive. In addition, three lucky donors will each win dinner for two worth $50 at a local restaurant.

Zukowski, who has A+ blood, requests that all healthy prospective donors return the mailed pledge card to her by Monday December 12. If you have any questions, please ask your blood drive captain, or call Ext. 3334.

Blood Drive Captains

Accelerator	Peter Yamin
Applied Math	Art Harris
Applied Science	Pat Taylor
AUI/Fiscal	Mark Israel
Biology	Richard Sautkulis
High Energy Facilities	Vera Mott
Central Shops	Christine King
Chemistry	Sophie Kostuk
Contracts & Procurement	Harry Klein
DOE	Greg Ogeka
Instrumentation	Pat Gilleeny
Management Info. Sys.	Jim Birtle
Medical	Elliott Levitt
NSLS	Susan White DePace
Nuclear Energy	Barbara Barrett
Personnel	Marsha Kipperman
P&GA	Karen Hartman
Physics	Barbara Still
Plant Engineering	Bruce Medaris
Reactor	Berthel Becton
Safe. & Emerg. Serv.	Smith Pearsall
S&EP	Charles Flood
Staff Services	Nick Pisco
Supply & Materiel	Lou Di Carlo
Technical Information	Marilyn Galli

Rare Air (Cont'd)

samples. The typical two-story house requires only 4 sample collectors, and the usual measurement period is one week. Unfortunately, this simple system is not available commercially.

Back at the lab, the gas tracer is removed from the charcoal by heating the sample collector to 400°C. The gas samples are then passed into an automated electron-capture chromatograph that analyzes the composition of the gas, handling the samples from 5 homes in 3 hours. Edgar Cote, DAS, developed the analytical system, and completes the experimental sample analysis. A computer program designed by Robert Goodrich, DAS, calculates the concentration of the PFC tracer used, and then computes the infiltration rate of fresh air.

A unique innovation of AIMS is its "multizone" use. By utilizing a different type of PFC tracer in the basement, first and second floors of a house, AIMS can now determine the air exchange rates among the floors, and the rates at which fresh air infiltrates into each floor of the house.

Given a source of pollution within the home, multizone AIMS can determine the pollution source strengths or scavenging rates in the house as a whole, and separately for the individual floors. Using the AIMS model, Dietz can evaluate how one house differs from another in concentrations of indoor pollutants due to variations in building tightness and structural materials.

"Since we spend a significant, if not the greatest, portion of our lives indoors, the quality of that environment is as least as important as that of the outdoors," concludes Dietz. Dietz's multizone AIMS will be an important technique in developing quantitative standards for indoor air quality.

—Marsha Belford

Is Your Gift List Complete?

As of Tuesday December 6, 11 days before the end of BNL's 1982-1983 United Way Campaign, 644 employees have generously pledged $41,539 towards the $60,000 goal set by campaign chair Roseann Callister. "On Friday with one week left, I'm hoping we'll be closer to $50,000," says Callister. "If every one of the 3,259 BNL employees donates 50¢ per week, we'd donate $84,734 to the United Way of Long Island — much more than the goal we've set for ourselves for so little per person per week."

The 2,615 employees who have not yet made their contribution to United Way can do so by returning this pledge card to Callister at Building 355, or to Betty Pergan, BNL United Way campaign treasurer, Building 179A.

LIFE NUMBER	EMPLOYEE NAME (Please Print)	DEPARTMENT

In support of the Member Agencies of the UNITED WAY OF LONG ISLAND, I hereby authorize Brookhaven National Laboratory to make regular payroll deductions for the amount indicated Payroll deduction PER PAYDAY to start 1st payday of January 1984 If you are already contributing through payroll deduction, last year's authorization expires the last payday of December 1983 Won't you please renew or increase your contribution on this new card today?

1983—1984 CAMPAIGN

☐ Here's my one-time gift in the amount of $ _____ Paid by Cash ☐ Check ☐

.50 ☐ 1.00 ☐ 2.00 ☐ 3.00 ☐ 4.00 ☐ 5.00 ☐ Other ☐

Payroll Status ☐ Weekly ☐ Monthly

Date _____ Contributor's Signature _____

The booklet enclosed with this mailing lists agencies that are served by the United Way of Long Island. If you would like to have your contribution donated to one of these particular agencies, please indicate below. United Way will forward your contribution directly to the agency you have designated

Agency (Please Print) _____

Alex Reben

(From left to right) Mon Lin, DAS, Terry Whitledge, DAS, Helen Quinby, and (far right) Kurt Jellett listen as Bill Rabatin tells of the big one he caught and released -- or did it get away?

Fly Tie by Night

The smooth-scaled trout slipped swiftly through the water as it whooshed round the bend. Swimming strongly, the speckled fish finned her way around the river bed boulders which tossed the shimmering liquid crystals into the air. As the spray of gemstones skipped over the water's surface, the trout darted into a deep, quiet pool.

Hungry from her morning run, the trout plucked a few Mayfly nymphs from the water. It was the time of year for these wingless larva to metamorphose into the adult Mayflies immortalized by poets for their short frantic life. As they ascended from the river bottom, molted their skin, and emerged at the water's surface as winged insects, the Mayflies were fed upon by the trout. However, the last Mayfly this game fish took into her mouth was not a Mayfly but an angler's imitation: an artificial lure made of fur and feathers along a hook.

"A fly-fisherman is a naturalist who must understand the interrelationships among the fish, their food, and their water environment," explains Helen Quinby, DAS, president of the BNL Fly Tyers Club. "His tied flies must look and behave correctly in order for them to fit into a niche in the river, and serve as bait for the fish." Fly tying, like fishing itself, is an art.

During the non-fishing season, the art of fly tying, and artfully told fishing tales, are shared each Tuesday night in the basement of the Medical Research Center starting at 6:30 p.m. by the members of the BNL Fly Tyers. For the $3.00 membership fee to this BERA sponsored club, a new fly tyer can use the club's fly tying vises and materials, and learn from the BNL fly tying experts.

"When you take up fishing, in addition to purchasing a rod and reel, you buy commercially tied flies for $1.25 to $1.50 each," says Bill Rabatin, Plant Engineering. "But on your first outing, you can hang some flies in the trees, and get others caught in the grass, losing a lot of money in the process. So tying your own flies, each of which costs pennies in materials and takes 10 minutes to make, is economically necessary if you become a serious fisherman."

The artificial fly represents anything that the fish may feed on: water or land insects, small fish, crustaceans, etc. "Experimental" flies, such as many of those made by Dick Stoner, Medical Department, imitate nothing in nature, but attract fish anyway.

To tie a fly, first you must learn a little entomology, for instance, the life cycle of the insects preyed upon by the fish you wish to catch. To learn what the artificial flies look like from larval through adult stages, you can look in fly tying "cookbooks" whose recipes include such ingredients as deer hair, turkey quill, and rooster feathers. However, you can best learn how to tie the body, head, tail, wings, and hackles of a "dry" or "wet" fly from other fishermen, like the BNL Fly Tyers.

Alex Reben

A fly tied by Kurt Jellett which imitates salmon eggs and is used during the spawning season to lure salmon.

Looking for fishermen who knew how to tie flies and who would be willing to teach the art, Stoner placed an ad in the Brookhaven Bulletin in 1976. John McCafferty, retired from the Accelerator Department; James Hanson, Plant Engineering; and Joseph Hanson, Photography & Graphic Arts, responded and offered a demonstration. By 1977, there were enough BNL fly tyers to form a BERA club.

From April 1 through September 30, informal BNL Fly Tyers meetings are held on Carmans River in Yapank, in the Connetquot State Park, and other fly-fishing hot spots. There the skill of the fly tyer is judged by the fish, and more stories of the big fish that got away are crafted.

The Fly Tyers will be giving demonstrations of their art during lunch hour at Berkner Hall on Tuesday and Wednesday, December 13 and 14. Those interested in joining the club are invited to contact Helen Quinby, BNL Fly Tyers president, at Ext. 3069, or vice president Kurt Jellett, Accelerator Department, Ext. 4698.

— Marsha Belford

AUI Lecture

Chief Washington Correspondent of The New York Times, Hedrick Smith, will give the 29th AUI Lecture at 8:30 p.m. on December 14 at Berkner Hall. He will speak on "The View from the Potomac." The lecture is open to the public.

BROOKHAVEN BULLETIN

Published weekly
for the employees of
BROOKHAVEN NATIONAL LABORATORY

BERNICE PETERSEN, Editor
MONA S. ROWE, Assistant Editor
ANITA COHEN, Reporter

35 BROOKHAVEN AVE., UPTON, N.Y. 11973
Telephone (516)282-2345

If It Says "Secret"...

Classified documents come in three levels — top secret, secret and confidential. At Brookhaven, none of the work involves top secret documents. For example, there is no weapons work done here.

But the Lab does have two research nuclear reactors, as well as some limited research programs that use nuclear materials. Certain information on these special nuclear materials is classified.

So if you come across a document stamped "SECRET" or "CONFIDENTIAL," and you don't have a security clearance, here's what to do. Don't open it. Notify BNL's security officer, Len Emma, at Ext. 3334. Also, if you have questions about security clearances and procedures, he will be happy to answer them.

Hispanic-American Society

The newly formed Hispanic-American Society will hold a meeting on Wednesday, December 14 at 11:45 a.m. in Berkner Hall, Room A. Plans for future social and cultural activities will be discussed. Everyone interested is cordially invited to attend.

NYC Train Trip

The Hospitality Committee is planning a group railroad trip to New York City on Wednesday, December 21. Departure will be at 7:55 a.m. from the Patchogue LIRR station. Round-trip fare for adults is $3.50; children under five years ride free.

Reserve a ticket by sending your fare through the U.S. mail to BNL, P.O. Box 322, Upton, New York 11973. Checks or money orders, payable to BNL, must be received by Thursday, December 15. Put the date of the trip, your BNL life number and your phone number on the back of your check or money order. Do not send cash. Your tickets will be given to you at the railroad station on the day of the trip. Refunds will be made only if cancellations are received by the Monday morning preceding the trip.

Choral Rehearsal

The next rehearsal will be in Berkner Hall on Monday, December 12; not Tuesday as originally scheduled.

Holiday Sales

at the
Exhibit Center Science Shop
(West side of Bldg. 701)
Fridays only...December 9 & 16
10 a.m. to 3 p.m.
Stocking Stuffers and Hanukkah Gifts:
3D Stickers...Rainbow Finders...Star Wands...Bridge Kits...Stereoptics...
Over 50 fascinating items
Prices from 10¢ to $6.00.

WIS Meeting

Julian Russo of Dean, Witter and Reynolds, will be the speaker at the next Women in Science lunch meeting on Tuesday, December 13. Russo will discuss financial planning, examine new regulations, and offer suggestions for sound investments. All employees interested in this subject are invited to attend. The meeting will start promptly at noon in Room A. For any further information, call Ext. 5271.

Equipment Demos

IBM Instruments will be at Brookhaven on Tuesday, December 13, to demonstrate the Computer System 9000. Two sessions will be held in Room B, Berkner Hall; from 10 a.m. — 11:30 a.m., and from 1 p.m. — 2:30 p.m.

The **Gestetner** Corporation will demonstrate the Gestetner Management System, a single station office system expandable to a 5-station office network, at Berkner Hall on Thursday, December 15. The demonstration will be in the lobby from 11 a.m. — 3 p.m.

Arrivals & Departures

Arrivals

Ronald J. Angona ... Instrumentation
Terrence M. Sullivan ..... DNE
Gary W. Zielinski ..... DNE

Departures

This list includes all employees who have terminated from the Laboratory, including retirees:

David A. Wesner ..... Physics

Motorcycle Club

A meeting will be held on Monday, December 12, at 5:15 p.m. in the Recreation Bldg. Refreshments will be served. Please attend.

MICOM Meeting

The next meeting of the MICOM Users' Group will be on Wednesday, December 14 at 3 p.m. in conference room 2-160, Bldg. 510A (Physics). MICOM representatives Ruth Stannish and Eileen Rhiel will be present and the new 1984 coordinators will be announced. For further details, call Ellen Fredrickson, Ext. 4486, or Nancy White, Ext. 3793.

1984 Holidays

New Year's Day	Monday	January 2
Washington's Birthday	Monday	February 20
Memorial Day	Monday	May 28
Independence Day	Wednesday	July 4
Floating Holiday	Thursday	July 5
Labor Day	Monday	September 3
Veterans' Day	Monday	November 12
Thanksgiving Day	Thursday	November 22
Day after Thanksgiving	Friday	November 23
Christmas Eve	Monday	December 24 (½ day)
Christmas Day	Tuesday	December 25
Floating Holiday	Wednesday	December 26

Roger Stoutenburgh

Ed Gross, instructor of BNL's karate class, demonstrates a hook kick, a controlled kick to the head. Because he is an instructor in the Kempo Taekwondo Federation, Gross, who holds a 10th degree Black Belt, wears a black uniform, or Gi, with gold lettering and gold leg stripes. His opponent, Karate Club president Whitey Caiazza is ranked as a Red Belt. Accordingly, his student's Gi is white, trimmed in red.

Karate: Martial Art & Family Sport

Of the 1500 Americans who practice Kempo Taekwondo karate, only two now hold the highest possible rank of 10th degree Black Belt. One of those is Ed Gross. A former karate instructor to the 11th Airborne Green Berets, Gross now teaches the skill to members of the Suffolk County Police Department and to children enrolled in the Suffolk County PAL program. He's also the instructor for the BNL Karate Club, which meets in the gym on Friday evenings from 7:30 to 9 p.m.

Kempo Taekwondo finds its roots in 17th century China, where it was practiced as Kempo Tai Jitsu, a "father-to-son" art. After traveling to Japan, where it was taught to Samurai nobles, it merged with the Korean Taekwondo, to create the present form. As founder, president and Grand Master of the Kempo Taekwondo Federation, Gross says, "The Federation is run on a family basis. In class, our more advanced people help the beginners, particularly the children. We emphasize education, conduct and learning to deal with everyday life situations."

Though he sees karate as a route to self-growth, Gross acknowledges other reasons for taking it up. "I started in 1954, when I was ten, as a means of defense. You needed it in Brooklyn," recalls Gross, who attained his present rank in 1977. "A lot of people now are taking it for health reasons. We emphasize balance, mental training and coordination between mind and body." As far as that goes, Gross says, "Women are better than men. They're very agile." For example, two of Gross' female PAL students, both Green Belts, have been gold medal winners at the AAU National Championships. And his daughter Donna Marie is not only a 2nd degree Black Belt, but also a former Miss Suffolk County.

Attaining any degree of Black Belt in Kempo Taekwondo generally requires many years of training, as students work their way up through several ranks, starting with the beginner's white belt. To start on this road, or pick up where you may have once left off, Karate Club president Whitey Caiazza says, "Just come to the gym and watch or start, any Friday, or call me at Ext. 2913." The classes are open to all those deemed eligible by BERA — men, women and children, five years and older. Fees for the 1½ hour classes are $8 per session, or $30 per month. — Anita Cohen

PSI News

At the December 12 meeting of PSI, June Pitkow, Sales Consultant of World Computers, will demonstrate word processing concepts using Kaypro Personal Computers. The meeting will be held at 6 p.m. in Room B, Berkner Hall.

Bowling

Red/Green League

J. Morris had games of 215/210, L. Schairer 204, C. Tomesch 201.

Purple League

J. Petro rolled a 255, J. Ferrante 224/209, D. Adams 214, M-G Meier 197/190, S. Smith 193, K. Jellett 190, M. Stoeckel converted the 6/7/10 split.

White League

For the women, M. Picinich had a 204/170, J. Thiede 202, P. Manzella 175, M. Scheidet 172, P. Lebitski 170. For the men, A. Pinelli rolled a 203, K. Riker 201/202. The Dips now have the high gross game with an 879 and The Good Times high series with a 2569.

Singles Club

The regular monthly meeting on Tuesday, December 13 at 5:15 p.m. in the Recreation Building, will be followed by a wine and cheese Get Acquainted Party. B.Y.O. wine and cheese. Glasses will be available. Any questions? Call Chuck Watson at Ext. 5317.

Cooking Exchange

The next meeting of the Cooking Exchange will take place on Wednesday, December 14 in the Recreation Building from 12:30 to 2:30 p.m. The recipes to be demonstrated will make your Christmas Day brunch a truly outstanding culinary delight.

The meeting is open to on-site employees and their families. The charge is $1 per person, and babysitting is provided at 50¢ for each child.

Contact Dee Polychronakos, 744-3578, or Julie Schiappi, 698-7322, for further information.

Classified Advertisements

Placement Notices

The Laboratory's placement policy is to select the best-qualified candidate for an available position, with consideration given to candidates in the following order of priority: (1) present employees within the department, with preference to those within the immediate work group; (2) present employees within the Laboratory as a whole; and (3) outside applicants. In keeping with the Affirmative Action plan, selection decisions are made without regard to age, race, color, religion, national origin, sex, handicap or veteran status.

Each week, the Personnel Office lists new personnel placement requisitions. The purpose of these listings is, first, to provide open placement information on all non-scientific staff positions; second, to give employees an opportunity to request consideration for themselves through Personnel; and, finally, for general recruiting purposes. Because of the priority preference policy stated above, each listing does not necessarily represent an opportunity for all candidates. As a guide to readers, the listings are grouped according to the anticipated area of recruitment.

Except when operational needs require otherwise, positions will remain open for one week following publication date.

For further information regarding a placement listing, contact the Personnel Placement Supervisor. Ext. 2882.

OPEN RECRUITMENT: Opportunities for present Laboratory employees and outside applicants.

1974. MEDICAL ASSOCIATE - Requires BS in biology or equivalent. Individual will be involved in investigation of biological effects of electromagnetic fields. Duties include animal weighing, record keeping, maintenance of animal and cage logistics, movement of heavy animal cages, data entry, and extensive microscopy. Experience with laboratory animals is highly desirable. (Term appointment to **September 30, 1985).** Medical Department.

1975. PROGRAMMER - Responsible for the coding of programs, testing of program logic, and preparation of these programs for computer operation. Will assist systems analysts in design specifications. Requires BS in business administration or a related field, and a year of COBOL programming experience. Familiarity with Hewlett Packard 3000 highly desirable. Management Information Systems Division.

1976. CLERICAL POSITION (Temporary, part-time) - Requires excellent typing and a diverse secretarial background, including word processing. Knowledge of technical typing helpful. Will perform a variety of clerical functions on an "as-needed" basis. Personnel Division.

Autos & Auto Supplies

VW PARTS - new parts at wholesale prices, call for needs. Augie, Ext. 2419 or 289-4211 eves.

75 CORVETTE - a/c, p/c, p/b, p/w, T-tops, thru spokes, am/fm cassette stereo, excel. cond., asking $9,000. 744-6892 eves.

72 VW SQUAREBACK - runs well, $750. 286-1183 or 924-7238.

MICHELIN CR78-14 - used, $10; unused 600-12, spare from Honda Civic, $10. Tom, Ext. 7196 or 286-2505.

73 HONDA XL250 - 6K mi., 3 cycle eng., for on or off road use, $500. Ext. 3458 or 369-2504.

SNOWS - HR 78-15 Bridgestone, RD-702, steel radials on 1979 Buick steel mag wheels. Al, Ext. 4216.

82 TOYOTA SR5 HARDTOP - excel. cond., cloth interior, metallic beige, must see, asking $6800. Al, Ext. 4442 or 929-8411.

VW PARTS - misc., rebuilt 1300 head, new valves, guides, $30, rebuilt 12V gen., $30. Ext. 5038.

76 FORD GRANADA - auto., good cond., asking $1,350. Wada, Ext. 4391 or 282-3035.

VAN BENCH SEAT - new with quick release hardware. Ext. 3351 or 941-4581.

80 CAMARO - Rally Sport, V8, p/s, p/b, am/fm, 41K, $4,995. Mike, 887-7857 days, 212-209-0507 nights.

RADIO - Clarion, RF 411, $45. Ext. 3591 or 265-0501 after 6 p.m.

63 FORD GALAXIE 500 - 289 V8, manual trans., new tires & exhaust sys., v.g. cond. Mike, Ext. 4988.

TRAILER HITCH REESE - Class IV, with elect. brake & ball mount. Marsha, Ext. 3327.

78 HONDA CIVIC - as is, runs well, make an offer. 878-1804.

72 JEEP - P.U. 4x4, 360 V8, automatic, 63,000 mi., $800. 281-6237.

73 VW CAMPER - excel. cond., pop top, $2,600. 286-0497.

74 MUSTANG - V6, 4 speed. Dick, Ext. 7772.

79 OLDS DELTA - 2 dr., a/c, p/s, auto. trans., 59,650 mi., $4950. Vic, 541-4318.

77 MG MIDGET - excel. cond., stereo, spoked rims & more, 48,000 mi., $3,500. 289-0904.

74 FORD PINTO - auto., new exhaust, 83K mi., runs well, $600. Kathy, Ext. 3832 or 399-2935 after 6 p.m.

74 CHEVY IMPALA - $400. Mike, Ext. 2561 or 399-3473 after 5 p.m.

72 VOLVO - 145 wagon, a/t, clean, many new parts, must sell, price negot. Amy, Ext. 2369 or 821-0754 after 6 p.m.

68 RENAULT - $50. 65 Comet, needs work, $200. Ext. 2923.

72 TOYOTA CORONA - 62,000 orig. mi., good running cond., $300. Walt, Ext. 3041 or 589-3968.

SEARS CAR TOP TURTLE - never used, $75. John, Ext. 7626.

82 KAWASAKI - KDX 175 Enduro, excel. cond., $1,100. 821-1042.

77 DODGE ASPEN - auto., a/c, p/s, p/b, 4 dr., 6 cyl., runs great, $1,900. 924-6751.

79 FAIRMONT - 4 dr., auto., p/s, a/c, 65K mi., clean, excel. cond., $3,495 firm. 282-2525 or 567-1812.

74 CADDY DEVILLE - fully equipped, garaged, orig. owner, excel. cond., $2,500. O. White, Ext. 4248 or 331-1907 eves.

FORD TRUCK PARTS - '79 8' bed, $250; '73 cab, $100; rear step bumper, $50. Dick, Ext. 3499 or 589-9103.

72 YAMAHA MX - 360 c.c., many trick items, elect. problem. 475-3415 after 6 p.m.

77 F 150 XLT - 4x4, 351 auto., a/c, all terrain tires, loaded, 68,000 mi., mint. $6,900. 929-4663.

TIRES - (2) Michelin XZX steel-belted radials, 195/70, HR-14, excel., cond., $30/pair. Ext. 3242 or 7192.

69 PLYMOUTH VALIANT - 6 cyl., 3 spd., standard, 4-dr. sedan, good cond., $475. Rich, 727-7626 ater 5:30 p.m.

76 VW RABBIT - 4 dr., good body, am/fm cassette, good interior, $2,000. 286-8218.

73 RANCHERO - good shape mechanically, recent auto. trans. & brakes, good tires, am/fm cassette, asking $1,000. 281-4392.

80 CITATION - p/s, p/b, a/c, stereo, low mileage, mint cond.. 929-3453 eves.

SERVICE MANUAL '76 AMC - for Gremlin 40 Series, Hornet 01 Series, Matador 10-80 Series, w/brake supplement, $10. Ext. 2346.

83 SUZUKI - RM80, 3 mos. old, excel. cond., $800. Bob, Ext. 4672 or 929-4753 after 5 p.m.

76 CAPRI - 2300 c.c., 4 spd., selver w/blk. int., am/fm cassette, v.g. cond., $1,600. Ext. 3242 or 7192.

70 BUICK SKYLARK - 4 dr., 6 cyl., a/t, p/s, $325. Fred, Ext. 3259.

74 CHEVY VEGA — 4 spd., am/fm, GT model, cast iron cyl., reliable, econ. transportation, $450. Ext. 2793 or 744-3945.

81 MUSTANG - 4 cyl., 5 spd., p/s, p/b, am/fm, low mi., $4,900. 472-1473.

SNOW TIRES - (2) 15" on slug Ford pickup truck, rims, good cond., $25. Artie, Ext. 2697.

TIRES/HUBS - (4) Michelin, 165GR13, 15,000 ,o., Alloy Mag hubs, 5½Jx13H2, $300. Bruce, Ext. 7132 or 653-9653.

79 CHEVY CAPRICE WAGON - a/c, a/t, p/s, p/b, digital am/fm cassette, extras, excel. cond., $3,950. Dick, Ext. 2911 or 698-5298.

75 DODGE DART SPORT - 340 ci, 4 spd., Cragers Dunlop radials, new cluth, stereo, asking $1,700. 732-7288.

74 CHRYSLER NEWPORT - $500 or best offer. 727-5912.

Boats & Marine Supplies

67 JOHNSON - 60 hp, elect. start, new starer, rebuildable or for parts, not running. $95 firm. Sanchez, Ext. 3848 or 281-6498.

17' ODAY - 1978 day sailor, fiberglass, galvanized trailer, 2 hp motor, multi-colored sails, $3,600. Ext. 2017 or 744-7708.

29' SAILBOAT - Bristol 29.9, diesel, wheel, dodger, top-quality yacht. Joe, Ext. 7961 or 722-3957 eves.

17' LYMAN - runabout, full canvas, 50 hp Evinrude. Roger, Ext. 5212 or 878-8847.

Garage Sale

GARAGE SALE - Dec. 10-11th, bargains - misc. paints, tools, furniture, etc., 334 South Country Road. 286-1192.

Miscellaneous

AM/FM STEREO - w/twin speakers, records & plays 8 track tape records & plays cassette tape, separate BSR, auto. turntable, $150. John, 589-2338.

CAST IRON RADIATORS - all sizes, convert your coal and wood unit for hot water heat. 751-6418.

XMAS TREE - 6' artificial, $15; space heater, $25; table-top humidifier, $25. All excel. cond. S. Spark, Ext. 4111.

SHELL NIGHTLIGHTS - new, large, deep-scooped scallop shell w/on-off switch, $8.50. 286-0422 after 6 p.m.

CHRISTMAS TREE - artificial Scotch pin, 8', $10; Wayne pump, $15; twin l/r chairs, $25 ea.; red plaid recliner, $30. Ann, 286-2280.

XMAS WREATHS - from pine cones, lasts forever, $6.50. 878-0026.

ELECTRONIC SCRABBLE GAME - $12, retail value $38; G.E. toaster over, $25; ice cream maker, $15; popcorn marker, $15; all items new. 589-4407 eves.

ROCKING CHAIR - wood, good cond., $10; carpet 12'x7', gold color, good cond., $15. Ext. 7505 or 689-8605.

LADIES WINTER COAT - almost new, very cheap. Chandra, 924-0582.

CAST IRON RADIATORS - ass't sizes, wood enclosures, vents and valves; Craftsman 18" chain saw, $125; Kerosun radiant 36 heater, $75. 751-8240 eves.

REFRIDGERATOR - 19 cu. ft. Kenmore, auto ice, textured doors, Power-Miser, Space Master shelves, 2 yrs. old, excel. cond., $350/offer. 331-5912.

HO TRAIN SET - w/many accessories, will sell parts separately, $400. 744-8632 after 6 p.m.

MICROWAVE OVEN - Kenmore, digital controls, temp. probe, 4 stage memory, excel. cond. Ext. 7727 or 929-4631.

ELECTRONIC FOOTBALL - $5; erector set w/motor, $20; 8-track tape case for 12 tapes, $2, excel. cond.; slightly used: electronic team play soccer, $3, Fireaway, $2, am/fm headphone radio, $5. 473-7460.

BUNK BEDS - $50; crib, $25; cement blocks 40¢ ea. Hugh, Ext. 4424 or 924-3293.

CAMERA TRI-POD - heavy duty, like new, Husky IV, $70; SLR Autoreflex T3 Konica, collector's camera, v.g. cond., body only, $100. 286-8448.

ATARI 2600 - plus 14 cartridges, $75. Brian, Ext. 5109 or 567-8301.

PIANO - "Player" minus the roll, striker re-felted, woodgrain finish, upright; good cond., asking $400. Ext. 7148 noon.

LOWERY ORGAN - DBL/KYBD Leslie speakers, Early American, good cond., $400. Ronnie, 281-1862.

DINING TRESLE TABLE - solid dark pine, 4 ladder back chairs, excel. cond., $800. 744-3289.

PYREX MIXING BOWL - 1½ pt., 1½ qt., 2½ qt., 4 qt., green and white pattern, $8. Susan, Ext. 4267.

BIKES - (2) 26" ladies and (1) 20" Banana bike, all 3 spd. w/caliper brakes, $35, $30 and $25. 473-1620.

83 YAMAHA EXCEL III - snowmobile, only 33 mi., electric start, excel. cond., asking $2,200. Bob, Ext. 4672.

SKI PANTS - men's 34-R Woll 8-poly stretch, dark blue, never worn, $75. Ext. 4727.

FIREPLACE INSERT - "Dare IV" coal wood stove, 100,000 BTU's, used one season, dual blowers, cost $1,295, sacrifice $595. 654-5888.

BAUSCH & LOMB SLIDE PROJECTOR - w/lens, trays & carrying case, $50. Ext. 2173.

BENCH SAW - 10" motorized 1½ hp, new cond., $80. Ext. 2793 or 744-3945.

WEDDING/PROM DRESS - off-white, size 6, never worn, $200; matching shoes, size 6½, $30. 475-2873.

TOY ELECTRIC OVEN - really bakes, $10; boy's hockey skates, brand new, size 2, $12. 473-6546.

SKI/POLES - 170 cm Hart Jubilee metal skis w/Solamen step-in bindings & 145 cm pole, $35. Bruce, Ext. 7132 or 653-9653.

ELECTRIC STOVE - Bradford, 2 ovens, good working cond., $125. Roger, Ext. 5212 or 878-8847.

T.V. - B&W 19", working cond., $10; range hood w/fan lights & filter, $20. Victor, Ext. 2395.

HOLIDAY FRUITCAKES - assorted cookies, breads; cookies $4.25/lb., fruitcakes $5.25/lb., lab delivery. Adrienne, 654-4206.

XMAS LIGHTS - outdoor, 80 bulbs, never used, $20; 2 outdoor candle lights, 2/$5. Ext. 5274.

ATARI 400 COMPUTER - w/ joysticks, 410 program recorder, 6 cassettes/carts inc. Basic, $225. Ext. 4676.

ATARI 2600 - plus 10 tapes, $140. S. O'Kula, Ext. 4167.

HAMILTON GAS DRYER - good cond., best offer, must see. Sandi, Ext. 3559 or 744-9354 eves.

CLOCK-RADIO - $10; golf club & bag, like new, $55; suitcase, $20. Wada, Ext. 4391 or 282-3035.

WATERBED MATTRESS - queen size, brand new, never used, $50. Ext. 7698 or 473-5776 after 5 p.m.

GRAVELY ELEC. START TRACTOR - 24" snow blower, 48" bulldozer blade, plow, riding sulky, hauling cart, best offer. 234-6646.

GARDEN TRACTOR - Sears, 2 wheel w/snow blade, harrow, plow. $175. Ext. 3458 or 369-2504.

SECTIONAL SOFA - 4 piece, misc. furniture, rugs, etc., priced for quick sale. 286-1192.

ATARI 2600 CARTRIDGES - 36 different, $5 ea., system also available. Seth, 744-0485.

CHAIN SAW - Wen, 14" elect., excel. cond., $20. Al, Ext. 4216.

OLD LIBRARY TABLE - needs work, $30; 4 good wooden chairs, padded seats, $40; baby's car-bed, $5. 878-6637.

LEATHER JACKET - 42L, brown, waist length, zipper, liner, broken in for you. Ext. 5038.

KENMORE WASHER & DRYER - 6 yrs. old, excel. cond., $50 ea. Raul, Ext. 4331, 924-1421.

MCCULLOCH CHAIN SAW - 16", used 1½ hrs., $230; 3/4 hp compressor, tank, wheels, handle, excel., $125. 472-1283, eves.

FIREPLACE ENCLOSURE - quality brass Glass-master w/screen, good cond., standard opening, $150. 744-4611 after 6 p.m.

TICKETS - (2) to BERA concerts, $5 ea. Saswati, Ext. 4372.

MEN'S SNOWMOBILE SUIT - med., blue, good cond., $45; 2 black padded sissy bars, $20 ea. Frank, Ext. 2022.

ELECTRIC BASS - fender precision copy w/case, one yr. old, $120. Dave, 744-6506 eves.

RED POINSETTA - various sizes, delivery week of Dec. 12. Ray, 727-6818.

CAMPING TRAILER - tent type, old but serviceable, make offer. 924-0277.

HAND TRUCK - w/hydraulic lift platform, heavy duty, 500 lbs. capacity, $100. Joe, 261-7825.

BOY'S SUIT - Botany, navy, 3-pc., size 14, perfect for holidays, $20. Susan, Ext. 7235 or 399-1736 after 5:30 p.m.

DRILL PRESS TABLE - model 5/16 cap., variable spd. $80; new 5' sink top, lrg. basin w/back splash & faucets, $90. 475-0831.

EASTERN AIRLINES - $50 voucher valid until Dec. 31. $40. Peter, Ext. 4004.

SLR CAMERA OUTFIT - 35mm w/F1.7 lens, fitted case, electronic flash, telephoto lens, wide strap, brand new, sale price was $350, asking $200. Ext. 4153 or 732-5829.

TRACTOR - Simplex, new 6 hp engine, 30" rotary mower, 36" snow plow, $375. 286-2289.

LADIES ICE SKATES - size 8, men's size 10½, $5 pair; dishes, service for 8, $10. Ext. 2561.

SEARS TIMING LIGHT - like new cond., $30. Artie, Ext. 2697.

PIANO - upright Shoninger Spinet, good cond., $800. 589-6151.

LEVOLOR BLINDS - 1", 3 pcs., 40"x80", light brown, $30 ea. Ext. 2033.

WASHER/DRYER - elect., $185; water heater, 40 gal., elect., $25; dk. brown carpet 12'x16', $40. Ext. 4547 or 924-6688.

LAWN TRACTOR - 36" snow blower, 32" mower deck, skid chains, 8 hp, Simplicity, $500. 473-1967.

DISHWASHER - gold, $40; tape deck R/R, $100; bottle warmer, $2. Pete, Ext. 4819.

CARPET SWEEPER - $5; baby scale, $5; airline approved pet transporter, $20; boat winch, $4. Ext. 2561.

FIREWOOD - from oak trees, $90/cord (negotiable). 732-9130.

FREEZER - Gibson upright, 18.6 cu. ft., $125. Don, Ext. 2043.

Free

ARTIFICIAL FIREPLACE - w/electric lite logs, you pick up. Ext. 7148 noon.

HOLIDAY SHOW - tonight, 8 p.m. in Berkner Auditorium, Theater Group's presentation of holiday readings, and Lucia Festival from Sweden.

Lost & Found

LOST - white angora ladies cardigan sweater. Ext. 4444.

Car Pools

YAPHANK - need ride, will share expenses. Roland, Ext. 3969 or 924-3669.

RONKONKOMA - 2 drivers to join existing pool near LIE Exit 59, 8:30-5:00. Victor, Ext. 2395.

BELLPORT - need individual to complete 4 person car pool, 8:30-5:00. George, Ext. 7654.

Real Estate

Real Estate advertised for sale or rent is available without regard for the race, color, creed or national origin of the applicant.

For Rent

VERMONT - Christmas/New Year's vac., 2 bath, 3 bdrm. house, x-country & downhill skiing, beautiful view, family oriented. 732-6499 after 6 p.m.

STONY BROOK - furn. house during Dec. 17, 1983 to Jan. 27, 1984. Trans. to Lab avail. Jag, Ext. 5080.

BELLPORT - large studio apt. w/kit., util. incl., 1 person, only $325. 286-9051.

ROCKY POINT - 2 bdrm. house, close to Lab. Ext. 4853 after 1:00 p.m. or 473-4948 eves.

FARMINGVILLE - apt. for single person, l/r, bdrm., partial kit., full bath, clean & private. $325 plus security incl. all. Pat, Ext. 2907 or 736-1341.

RIDGE - 3 bdrm townhouse, 1-1/2 baths, central air, shed, patio, 5 min to Lab. Ext. 3541 or 924-4070.

Wanted

HOUSE SITTER — Dec. 17 to Jan. 7, E. Patchogue. 289-9724.

CARPENTRY - for repair of split-rail fence; painting, interior/exterior, professional quality. D. Borg, Ext. 3568 or 286-0428 eves.

TRAINS - Lionel, and "O" guage or "027" guage cars, track and equip. Frank, Ext. 3120.

HOUSE SITTER - someone to house sit in Stony Brook, refs. required, trans. to Lab avail. Jag, Ext. 5080.

BLUE JAY SPARS - mast (pref. wood), boom, spin. pole & rudder, rebuildable cond. o.k. Woody, Ext. 4662.

CHILD'S SLEEPING BAG - Barbie doll, clothes and equipment. 298-4398.

PEOPLE - interested organizing food/toy drive for Community Eastern Farmworkers Assoc. Steve Minton, Ext. 3610 or 727-9380 or 286-8004.

SMALL HOME COMPUTER - good cond.; full size double bed; 8' self-standing ladder. Liz, Ext. 2082 or 286-8563.

CARBURETOR - Rochester 4MV Quadrajet & flame arrestor, Bob, Ext. 5286.

MEMBERS - creative writing group, next meeting Dec. 13, 7:30 p.m., Center Moriches Public Library, no cost, all welcome.

VACUUM CLEANER - Raul, Ext. 4331 or 924-1421.

KITCHEN TABLE & CHAIRS - and/or small dinette. Saswati, Ext. 4372.

TYPEWRITER - IBM Correcting Selectric II, dual pitch, new or used. 732-7634 after 6 p.m.

SITTER - on site, part time for 14 mo. toddler, nonsmoker. 878-0717.

CAMERA TRIPOD - in good cond. Ext. 3381.

XMAS LIGHT - bulbs & sets, old series, any cond. Jack, Ext. 4722.

OUTDATED CALENDARS - pictures to be used as a teaching aid for a handicapped child. Forward to Edy Thornhill, Bldg. 460.

Classified Ad Policy Deadline is 4:30 p.m. Friday for publication Friday of the next week.