BROOKHAVEN BULLETIN
Vol. 41 - No. 14 April 3, 1987
BROOKHAVEN NATIONAL LABORATORY

DNE Analysts Ask:
Can the Big Quake Make the Pipe Go Plastic?

On the small Japanese island of Shikoku, the largest earthquake ever will be staged in the spring of 1988. On stage will be a section of metal piping, and the question Charles Hofmayer, Head of the Structures & Components Evaluation Group (S&CEG), Department of Nuclear Energy (DNE), poses is, "Can the big quake make the pipe go plastic?"

This staged event will be a test, but not of scientists' ability to predict earthquakes or change metal into plastic. Going plastic is not the latest dance craze, but the permanent deformation that a solid body, like metal piping, undergoes when subjected to exceeding stress.

The stage will be the world's largest vibration table, at the Tadotsu Engineering Laboratory, Japan. It will be asked to simulate an earthquake bigger than any ever experienced or expected in the world in an attempt to permanently deform a modified nuclear power plant coolant loop.

The answer to Hofmayer's question will result from an international agreement and three years of test preparation. The big quake test results will be used to better understand the capability of nuclear power plants to withstand earthquakes, as they must.

As few nuclear power plants have been subjected to earthquakes, current earthquake-proof design is based on computer analysis. To specify materials, their thicknesses and the necessary supports for nuclear power plant components, computer codes are used to solve mathematical models predicting the behavior of components during earthquakes.

Since there are interactions among components when they are assembled into structures within a plant, DNE is interested in how a large structure of a nuclear power plant behaves during a simulated earthquake.

BNL/Japan Agreement

Last December, BNL, as the U.S. Nuclear Regulatory Commission's (NRC) representative, entered into an agreement with the Nuclear Power Engineering Test Center, Japan, which is representing the Japanese Ministry for International Trade & Industry (MITI), to jointly perform the high-level vibration test of a nuclear power plant coolant loop.

A coolant loop consists of the steam generator, pump and piping used to deliver cooling water to the nuclear core of the reactor. A half-scale model of a typical pressurized water reactor coolant loop will be vibrated on the 15-meter by 15-meter Tadotsu Vibration Table.

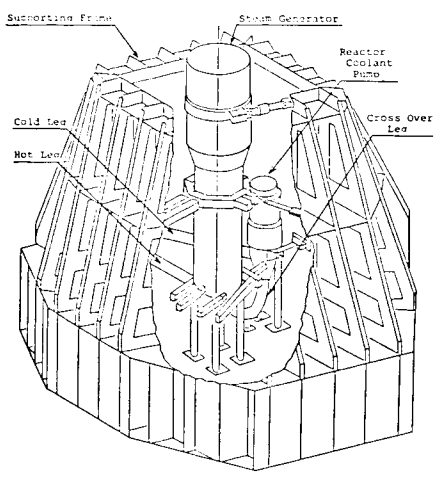

A cutaway drawing of the support frame housing the coolant loop model to be tested on the Tadotsu Vibration Table in Japan.

The table can hold a maximum load of two million pounds. While holding one million pounds, about the weight of the coolant loop model and the frame supporting it, the table can subject the load to a maximum acceleration of almost three times gravity. This acceleration is more than 15 times what U.S. nuclear power plants are required to be designed to withstand.

"Although there are large vibration tables in the U.S., we don't have a machine that can hold such a large load and go to such a large level," says Morris Reich, Head of DNE's Structural Analysis Division, in which S&CEG works. He adds that while the U.S. tests components, "we haven't taken a structure, say a reactor coolant loop, and shaken it — that has been done only by computer analysis."

Low-Level Proving Test

Before the coolant loop is subjected to the high-level vibration test, it will be shaken at lower seismic levels in proving tests. "To demonstrate the reliability of their nuclear power plant components and systems at the required levels, the Japanese have undertaken large-scale, seismic proof-testing," explains Hofmayer.

During a proving test, a component or structure is vibrated at earthquake-design levels. As it is designed to withstand the vibration, it does not

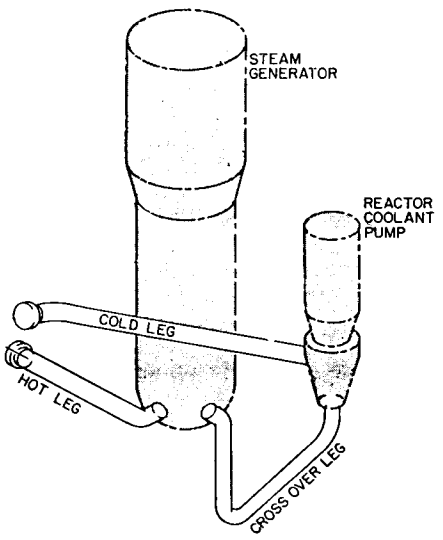

A schematic of the coolant loop.

permanently deform, or become plastic. Therefore, the test proves that the equipment will perform as specified.

As many components and structures have been tested this way, the computer codes used in nuclear power plant design for earthquakes have already been validated using these results. When designed based on these codes, parts are earthquake-proof.

How much more quaking can the coolant loop withstand? How much safety margin does earthquake-proof nuclear power plant design contain? Are the computer codes correct for components experiencing large plastic deformations?

High-Level Vibration Test

These are questions to be answered by the high-level vibration test. "This test will either validate the predictions that we make by computer analysis or provide information to improve them," says Hofmayer, "but we are very confident that our predictions will be right."

During the past year, Hofmayer and his group, which includes John Curreri, José Pires and Semyon Shteyngart, had to analyze the possible configurations of the coolant loop.

Mort Rosen

(From left) Morris Reich, José Pires, John Curreri, Semyon Shteyngart and Charles Hofmayer.

They chose a design that would undergo a permanent deformation when subjected to the maximum vibrational levels that can be achieved on the test table.

"For the high-level test, the top part of the steam generator will be cut off and lateral supports will be removed in an attempt to make the model go plastic," explains Hofmayer. Thus the coolant loop model to be tested is significantly weaker than a coolant loop found in a nuclear power plant.

The group is now performing computer analysis to tell the vibration table how to shake. "The seismic input for the table can be real time histories of recorded earthquakes, simulated earthquakes or combinations thereof," says Reich.

Hofmayer and his colleagues are also deciding on where to place the gauges to measure the actual defor-

(Continued on page 2)

DOE Team to Begin Environmental Survey

Beginning Monday, April 6, a team from the Department of Energy (DOE) will conduct a two-week, baseline environmental survey of the BNL site.

Similar surveys have been or will be conducted at all other DOE facilities, which total about 40, as one phase of DOE-wide environmental, safety and health initiatives announced in September 1985 by Energy Secretary John Herrington.

Team leaders from DOE form the core of the survey team assigned to BNL. Also included are technical specialists from the NUS Corporation. On the ten-member team are environmental engineers and scientists, chemists, hydrogeologists and specialists in radiation monitoring and hazardous waste management.

The team will conduct a "no-fault" survey, explained Jan Naidu, Safety & Environmental Protection Division, who is the on-site coordinator for the survey. "This means that no one will be blamed for any problems the team finds," he said. "They just want to come in and look at all records, visit all buildings, talk to people and partake in a field sampling program. The ultimate goal is to identify any sources of pollution, see what happens to it when it enters the environment and determine whether the Lab has been able to follow the proper procedures for handling it."

At each building the team visits, the members will deal primarily with the safety representative assigned there. Naidu said, however, that others may be involved at times. If additional technical information is needed, for example, the safety representative may direct the team to someone else who can answer it more fully. Likewise, as the team surveys a building, they will observe people performing various procedures and may ask questions directly of those involved.

Based on the data collected during this survey, the team will issue a preliminary report, a working draft identifying any areas of concern. They will also draw up a site sampling plan, identifying areas to be sampled at a later date. Sampling will be done over two or three weeks, to supplement and/or verify environmental data previously reported by BNL and to determine whether additional potential environmental concerns exist.

Later, the working draft will be modified and expanded to reflect the results of the analysis of the samples. This will yield an interim report, which will be specific to the BNL site.

Once all DOE sites have been surveyed, DOE will prepare a final summary report. This report will be used to prioritize, on a DOE-wide basis, environmental concerns at its facilities and then to develop and budget for a comprehensive, long-range action plan to correct any identified problems and reduce environmental risks.

"The initiatives that led to this survey grew out of Secretary Herrington's belief that DOE needs to address all environmental issues at all DOE facilities," said Naidu.

Towards this end, Herrington established an Office of Environment, Safety and Health, headed by Assistant Secretary Mary Walker. Walker set up the DOE survey program, led by John Barker, who heads the Office of Audit & Compliance. Several teams will survey some 40 DOE facilities over a 2½ year period that began in June 1986.

Quake (Cont'd)

mation, force and acceleration the coolant loop will experience. Explains Reich, "We will vibrate the loop on the table at lower levels to make sure the table's response to the computer input is what we want before running the high-level test."

As Hofmayer points out, the agreement to perform this test is the first between the NRC in the U.S. and Japan's MITI to exchange information and data associated with nuclear power plant structural and mechanical engineering issues. "We are hoping that this will be the forerunner of future information and research exchange agreements in the area of nuclear power plant safety design," concludes Reich. — Marsha Belford

P&GA Offers a Colorful New Copy Service

The Quick Copy Service of Photography & Graphic Arts now offers full-color copying on paper, using their new Sharp color photocopier. Each copy takes about a minute to process, and colors are reproduced accurately. Color copies can be made on 8½" × 11" and 8½" × 14" paper. As well, 8½" × 11" color transparencies can be made from 35mm slides or paper originals. Due to the expense and time involved per copy, quantities to be reproduced in color must be limited. Color photocopying is available only for those special applications for which the function of color is important. To inquire about this new service, contact Copy Service Supervisor Joe Hanson, Ext. 2900.

Line Up of Human Genes

Maxine Singer, a biochemist and Chief of the Laboratory of Biochemistry in a National Cancer Institute division, will speak on "The LINE-1 Family in Human DNA -- Genes and Pseudogenes," on Thursday, April 9, at 3:45 p.m. in the Biology Seminar Room, Bldg. 463. The talk, which is sponsored by Brookhaven Women in Science, is open to the Laboratory community.

Singer and her co-workers have studied LINE-1, a major family of highly repeated, long interspersed DNA sequences. Evidence from their work suggests that, in humans and other primates, some members of LINE-1 may be structural genes, ones that code for proteins.

One or more LINE-1 members have extended sequence regions, called open reading frames, that could encode for continuous amino acids, the basic units of proteins. In the cytoplasm of a cell, amino acids are linked into proteins based on the information encoded in messenger RNA.

From organelles where cytoplasmic proteins are synthesized, Singer has isolated a messenger RNA that matches a LINE-1 open reading frame, and it appears, therefore, that the LINE-1 family contains one or more functioning genes. Since certain human embryonic-like cells contain more of this messenger RNA, Singer and her colleagues suggest that such functioning genes may be active early in development.

Singer has been Chief of the Laboratory of Biochemistry in the National Cancer Institute's Division of Cancer Biology and Diagnosis since 1979. A member of the National Academy of Sciences, she currently serves as chairman of the Editorial Board of the Proceedings of the National Academy of Sciences. In March 1988, Singer will become the eighth president of the Carnegie Institution, which has five research centers across the country. She received her Ph.D. in Biochemistry from Yale University in 1957.

Maxine Singer

Preceding the lecture, coffee will be served beginning at 3:30 p.m. A reception and dinner in Singer's honor will be held at the Old Inlet Inn, Bellport, at 6 p.m. Those interested in attending can make reservations by calling Edith Thornhill, Ext. 7813.

Inside Info

Sylvia Springhorn, a Biology Associate, has been honored by Brookhaven Town as one of ten women achievers of the year. According to Town Supervisor Henrietta Acampora, the women were selected by the town's Women's Services Advisory Board because "they have made outstanding contributions to their fields and have given much of their time and energy to make the Town of Brookhaven a better place to live." On "Women's Recognition Night," March 19, Springhorn received a plaque and a citation from the Town of Brookhaven, as well as another citation from Suffolk County.

Springhorn has worked in the Biology Department for more than 30 years and has co-authored close to 20 papers. She currently works with Sanford Lacks, studying the restriction enzymes dpn I, dpn II and methylase in *S. pneumonae* and *E. coli* bacteria. Active in the Bellport community, Springhorn has served on the South Country School Board for 14 years, as the current vice president and immediate past president. She is also president of the Nassau-Suffolk School Board Association.

BNL's Fabulous Forty

Lab employees, men and women alike, are no different from the rest of American society, so their perceptions of women and attitudes toward them change with the facts and the fashions of the times. These changes are mirrored in the content of the Lab's employee publications, as they reflect the movement towards women's social, employment and educational equality with men and away from sexual stereotyping and harassment.

In the first issue of Isotopics in 1947, Maisie, a fictitious female employee, gossiped about life at the Lab in a fabricated letter to her friend Gertrude. Maisie's letters were published through 1948 in a facetious column, "Letters Not to the Editor." Maisie was portrayed as a stereotypic "dumb broad," more interested in catching a man than in understanding the place at which she worked:

> This is a lovely place though sometimes I wish it was still full of soldiers. I know what to expect from soldiers but these scientific guys puzzle me. For instance, a nice feller I was talking to the other day said, "You know that you are full of atoms?"
>
> You know I'm not one to take an insult, so I says right quick, "Yeah? And you're full of soup," and I haven't seen the guy since. Well, I guess it's just as well. Imagine being out with a guy and having him say, "Pardon me, I have to go split an atom."

Another Isotopics column, called Fact 'n Fission, contained fillers, including many "dumb broad" jokes, domineering wife and henpecked husband jokes and other derogatory comments about women:

> A newspaper is like a woman. . . . They always have the last word. . . . They are well worth looking over. You cannot believe everything they say. . . . A man should have one of his own and not borrow his neighbor's.

Those were also the days when women were pictured playing softball in skirts, stockings and high heels, and the Brookhaven Employees Recreation Association (BERA) installed stocking machines so that "girls [can] maintain that well-dressed look all day and . . . need no longer feel down-at-the-heel and bedraggled when a run overtakes [them]."

In stories on Lab and BERA activities until the mid 1970's, men were men, but women were females (as in the "female members of the staff"), ladies ("lady keglers"), girls ("girl [tour] guides") or wives ("Lab wives").

In interviews of women, their ages, how they looked, if they looked their ages and whether or not they were married were always noted, especially if the woman did "not conform to the stereotypic horn-rimmed eye-glassed bookworm female scientist."

BNL's "Splitting the Atom for Peace" float in a 1967 Riverhead Town parade featured a model of the High Flux Beam Reactor with the stack of the Brookhaven Graphite Research Reactor and three female summer students as Miss Proton, Miss Electron and Miss Neutron, standing inside electron orbital rings. According to the Bulletin, "The parade went critical, and they started a chain reaction in the thousands of parade viewers."

In August 1961, the first "Miss BNL Bathing Beauty Contest" was sponsored by BERA as an activity associated with an "Operation Get-Together" picnic. The Bulletin advertised the picnic's features "from babes in diapers to babes in swimsuits." For the three consecutive years that the contest was held, the Miss BNL pageant results were Brookhaven Bulletin front-page news, with more pictures in the centerfold.

The contest was revived in 1974, but the times had changed the participants and the rules: Miss BNL became Ms. BNL, and, though still judged on appearance and poise, contestants wore street clothes instead of bathing suits; and a Mr. BNL contest was added, in which male entrants were judged on their physiques.

"Three lovely young ladies," Miss Electron, Miss Proton and Miss Neutron, represented the Lab on a float in an August 1967 Riverhead parade celebrating the town's 175th anniversary. As the Bulletin reported on its front page, "It took only one second for tens of thousands of parade watchers to decide that BNL's float was the hit of the day."

The short-skirt debate hit the pages of the Bulletin in July 1968, with a photo spread labeled "Brookhaven Fashions on Display: Short Skirts Help Beat the Heat." That inaugurated the beginning of posed cheesecake photos of women, which continued until the mid 70's.

These photos were published in the name of science (in 1974, a woman in a bikini gave her measurements in centimeters, to encourage Bulletin readers to "think metric"), administration (in 1970, a woman, "typical of most secretaries at Brookhaven," sat on a stool in front of a typewriter and could "smile even though she [was] snowed under by paper work" because she could call upon Quick Copy to make multiple photocopies for her), good sportsmanship (four women in minis and one wearing a bathing suit "advertise[d] the advantages of participating in all BERA activities" in 1972) or social consciousness (in 1970, a short-skirted woman offered the first opinion on the first question, on women's liberation, in a new Bulletin column called The Inquirer. The second question posed by The Inquirer and again asked only of women was whether or not "the mini skirt looks 'just a little cheap and vulgar.' ")

That the feminist movement also affected men and the content of the Bulletin was evident from the mid-70's onwards. In addition to eliminating preconceptions of women in its reporting, the Lab's weekly began noting men's movements, both the serious expeditions and fun jaunts, into what was traditionally considered women's territory at the Lab.

In addition to the Mr. BNL of 1974 contest, that year a man posed bare-chested and gave his "male vital statistics" in centimeters, "as another reminder that the metric system just around the corner for the United States." "With the advent of men's liberation, the [until then, all female BNL tour] guides were destined to be 'liberated,' " so in 1975, two men "made history by becoming BNL's first male tour guides." In December 1983, the Lab hired its first male secretary, and the Bulletin interviewed him at the beginning of the following year.

Women's adventuring into non-traditional jobs at the Lab made the pages of the Bulletin as well: In 1974, a story featured the first two BNL policewomen, and the first woman firefighter was interviewed in 1976.

— Marsha Belford

Speaking Out: About That Extra Hour

Reporter: Liz Seubert
Photographer: Peter Horton

This year, we will greet Daylight Saving Time on the first Sunday in April, instead of the last one, thanks to a law signed by President Reagan on July 8, 1986. On the dark side, on Sunday, April 5 at 2 a.m., we'll be putting our clocks ahead and losing 21 more hours of morning sleep than we did last year. But the new law is expected to save more than $28 million in traffic accident costs and prevent over 1,500 injuries and 20 deaths. And, of course, we'll each have an extra hour of daylight every day, which leads to the question: What do you plan to do with your extra hours of daylight?

Bhupinder Bawa (Central Shops) — I'm not all that fond of sleeping anyway. The hours will tuck away into my daily routine. I like to play badminton, so it will be useful to have the extra light.

Rosemary Cohen (Technical Information) — I'll be working on my vegetables. I have a greenhouse, and the seedlings are already coming up in their pots. Pretty soon I'll be able to bring them outside.

Barbara D'Agostino (Fiscal) — Having extra daylight is great. I'm keen on photography, especially nature photos. I like to get up, take my camera and see what I can find for a picture.

Filton Joseph (Suffolk County Community College, Work/Study student, AGS) — What will I do with extra time? Pick up girls!

Janice Lamb (Director's Office) — Extra daylight — and less sleep! Every year, I decide to go to bed earlier and catch up on that sleep, and every year, I stay up late and work. This year it's bound to be the same. It's a very depressing thought!

Ralph Garappolo (U.S. Post Office, Upton) — I'll sleep the hours away as much as possible. Maybe once in a while I'll throw the garbage out in the mornings, now that I won't be afraid of the dark!

Henry Danowski (Alternating Gradient Synchrotron) — I'll be fishing. I like both sea and fresh water fishing, and I'll be trying for flounder and trout. The earlier in the day you're out with your line, the better.

Monica Rosa (Department of Energy, Brookhaven Area Office) — My idea of what to do with extra daylight is to hope that it's warm enough to lie out in the backyard in a hammock, reading my favorite kind of book — a romantic novel.

Robert Munoz (Safeguards & Security) — Longer days mean it's time to take care of the lawn — and this year I'm determined to have tomatoes. We haven't had them for five years. Our new house has a full acre of land, so I'll be glad to get started.

Bob Tooker (Plant Engineering) — The extra hours? I'll spend them out in the garden. It gets me out of the kitchen. I like to do a lot of cooking, but slaving over the weeds makes a change!

Hospitality News

Anna Kwiatek, a member of the BNL Hospitality Committee, will be the guest speaker at the Committee's next morning get-together on Tuesday, April 17, at 9:30 a.m., in the Brookhaven Center.

The topic of Kwiatek's presentation will be "Polish Easter Egg Painting." Eggs, paints and wax will be provided for those who would like to participate in the program. It is requested, however, that you bring a fine paint brush and a sharp metal implement, such as a pick from a nutcracker set, for scraping a design on an egg.

We would like to have you join us for this fun get-together. Spouses of employees and guests are welcome. Coffee, tea and danish will be served. Please come and bring the children. Babysitting will be provided free of charge.

Arrivals & Departures

Arrivals

Jeffrey J. Aspenleiter ..... NSLS
Robert S. Bellando ..... Plant Eng.
Paul Chu ..... Accel. Dev.
Christopher M. Degen ..... DNE
Joseph H. DeLong ..... Accel. Dev.
Gary J. Frisbie ..... NSLS
Gilb Gilbert ..... NSLS
Nikolaos D. Laloudakis ... Accel. Dev.
Richard D. Loew ..... NSLS
John F. Trager ..... NSLS

Departures

This list includes all employees who have terminated from the Laboratory, including retirees:

Randy G. Abramowitz ..... NSLS
Lawrence A. Fanella ..... Cent. Shops
Christopher G. Hoogendyk ..... DAS
Augusto Lazos ..... AGS
Jacqueline J. Mirzadeh ..... Dir. Off.
Eleanor Murgatroyd ..... Budget
E. Seyma Ogut ..... Biology
Victor E. Scotto ..... Accel. Dev.
Marguerite L. Stoeckel ..... Fiscal

BROOKHAVEN BULLETIN

Published weekly
for the employees of
BROOKHAVEN NATIONAL LABORATORY

ANITA COHEN, Editor
MARSHA BELFORD, Senior Reporter
LIZ SEUBERT, Reporter

35 BROOKHAVEN AVE., UPTON, N.Y. 11973
Telephone (516)282-2345

Walk With Our Team

The annual March of Dimes WalkAmerica will take place on Sunday, April 26.

What is WalkAmerica? — A national walkathon held in more than 1,000 local communities to raise money for the March of Dimes.

Who Walks? — Men, women and children of all ages, representing all walks of life, will step out at WalkAmerica '87 to help fight birth defects.

How Does it Work? — Walkers get sponsors (friends, relatives, businesses, etc.) to pledge money for each kilometer completed at WalkAmerica. Participants can also earn free gifts based on money collected.

Where Does the Money Go? — Money raised helps support research, medical services and educational programs aimed at protecting the unborn and newborn.

How Can You Help? Join the BNL team. Pick up a registration form and route information sheet at the Recreation Office in Personnel, Bldg. 185.

It's a fun and exciting way to spend a morning. Don't miss it!

Cooking Exchange

The next meeting of the Cooking Exchange will be held on Wednesday, April 8, at 12:30 p.m. in the Recreation Bldg. This time it's the men's turn to cook.

The Cooking Exchange is open to members of the Laboratory community. A charge of $1.50 per person includes a sampling of the prepared foods and coffee or tea. Babysitting is provided at 50¢ per child. For further information, please call Judith van Asselt, 924-6129.

Equipment Demo

Representatives of Graphon Inc. will provide a demonstration and slide presentation on the alphanumeric, high-resolution Textronics graphics terminals. This will take place in the Berkner Hall lobby, on Tuesday, April 7, from 10 a.m. to 2 p.m.

All film badges will be changed tomorrow. Please place your badge in its assigned rack space before leaving work today.

Runners Corner

The BNL Running Club began an enthusiastic and successful 1987 season at the annual Avenue's St. Patrick's Day, Five-Kilometer Roadrace in Rocky Point on March 9. The race was won by Terry Sullivan (15:15), and age group awards were won by Dorry Tooker (3rd, 31:32) and Gus Prince (3rd, 21:14). Other runners from the BNL community were: Sally Calabrese, Sheryl Carey, Joan Congemi, Ronnie Evans, Kathy and Bob Hauser, Joann Langan, Kathy Norden, Sharon Zuhoski, Tom Clifford, Kevin D'Amico, David and Seth Fridae, Peter Lane, Tom Mendez and Brian Morris.

BNL also competed in the Dix Hills Four-Mile Roadrace on March 28. For the third successive year, the race was won by Terry Sullivan (19:45). The BNL team, which also included Jerry Hastings (22:59) and Mel Cowgill (24:01), placed second in the corporate division. Also running for the Lab were Sharon Zuhoski and Kevin D'Amico.

The Running Club's annual spring race will be held on site on Sunday, May 24, at 10 a.m. The format of the race will again be a five-mile run, open to individuals and couples. Attempts will be made to match unpaired individuals with a partner, if desired. This year there will also be a one-mile, non-competitive fun run. Applications may be obtained from Nancy Lazarz, Ext. 3519; Dean Chapman, Ext. 4744; or Skip Medeiros, Ext. 2665.

Anyone wishing to join the Running Club or get information about races or training runs may contact Medeiros or Gus Prince, Ext. 5079.

Basketball

First Game

Hollywood	61	Runaways	60
E. Meier Jr.	21	R. Moran	18
G. Mack	13	J. Desmond	16
D. Nordstrum	11	T. James	15
R. Domenech	10	S. Gilbert	5
G. Smith	4	M. Anerella	4
L. Lawrence	2	G. Shepherd	2

Second Game

Longshots	73	Celtics	60
J. Cyr	15	J. Gaeta	12
F. Molone	14	R. Garappolo	10
L. Walcott	14	M. Fulkerson	9
W. Cummings	13	P. Ratzke	8
R. Seymore	6	P. Browne	5
J. Garrison	4	M. Colon	4
L. James	3	R. Mease	4
R. Rowley	2	N. Schaknowski	4
S. Springston	2	T. Mendez	2
		M. Williams	2

Swim Lessons

Friday, April 3, is the last day to register for adult swim lessons to begin on Tuesday, April 7.

Classes are open to all employees working on site and their adult dependents, and will consist of one lesson each week on eight consecutive Tuesdays at 5:15 p.m.

A fee of $20 (checks payable to BERA) is due when registering at the pool during open hours.

Pool Hours

Monday through Friday:

11:00 a.m. - 1:30 p.m. Regular swim period for employees only.

1:30 p.m. - 2:00 p.m. Reserved for speed swimming and training.

5:00 p.m. - 9:30 p.m. Employees, families and guests.

Saturday and Sunday:
1:00 p.m. - 6:00 p.m. Employees, families and guests.

Cafeteria Menu

Week of April 6

Monday, April 6

Garden vegetable soup	(cup)	.75
	(bowl)	.95
Beef noodle casserole w/1 veg.		2.65
Sweet & sour pork w/1 veg.		2.75
Hot vegetable plate (lite-weight)		2.20
Hot deli: Corned beef	(bread)	2.45
	(roll)	2.55
	(hero)	2.65

Tuesday, April 7

U.S. Senate bean soup	(cup)	.75
	(bowl)	.95
Scalloped ham & potatoes w/1 veg.		2.65
Quiche Lorraine w/1 veg. (lite-weight)		2.65
Hot deli: Roast beef	(bread)	2.45
	(roll)	2.55
	(hero)	2.65

Wednesday, April 8

Turkey rice soup	(cup)	.75
	(bowl)	.95
Sausage pizza		1.00/slice
Roast pork loin w/1 veg.		2.75
Hot deli: Turkey	(bread)	2.45
	(roll)	2.55
	(hero)	2.65

Thursday, April 9

Purée of split pea soup	(cup)	.75
	(bowl)	.95
Chicken cacciatore w/1 veg.		2.65
Ham steak w/fruit sauce & 1 veg.		2.65
Hot vegetable plate (lite-weight)		2.20
Hot deli: Pastrami	(bread)	2.45
	(roll)	2.55
	(hero)	2.65

Friday, April 10

Manhattan clam chowder	(cup)	.75
	(bowl)	.95
Broiled fish w/1 veg. (lite-weight)		2.85
Macaroni & cheese w/1 veg.		2.65
Hot deli: Fried clam boat		2.45

Bowling

Red/Green League

H. Marshall had games of 224/207/613 scratch, W. Kristiansen 217, N. Combatti 204, R. Jansson 203, J. Medaris 202, J. Muller 201.

Pink League

Sandy Asselta rolled a 213, Donna McCambridge 196, Maria Apelskog 176.

White League

High games were bowled by Ken Asselta 215, Jim Amandola 207/204, Al Pinelli 211, Donna Riendeau 203, Ed Sperry IV 202, Pat Manzella 193/191, Kathy Griffin 189, Marilyn Picinich 187.

L.I. Industrial Tournament

On the last night of bowling Ken Riker rolled a 224, Ed Meier 204, Ken Asselta 203, Ed Sperry IV 237.

Volleyball

Standings - Week of March 23

Open League	
Phoenix	52-5
Dakota	48-11
Odds & Sods	34-23
Court Jesters	27-30
Rowdy Radicals	25-32
Target	24-33
Duituits	13-44
Out of Control	7-50
League I	
Upfagrabs	42-9
Dinkers	42-9
Xrayted	31-20
Phoubars	18-33
Bumpers	14-37
Net Results	6-45
League II	
Cannonballs	34-14
Nuts & Bolts	33-12
TNT	31-11
Fossils	23-19
Chunga's Revenge	21-24
Upton Ups	7-35
Misfits	4-38
League III	
Floaters	36-12
Printouts	32-16
Foul Ups	31-20
Screwballs	23-25
Sourcerers	22-26
Not Yets	17-34
Odd Couples	10-38

Classified Advertisements

Placement Notices

The Laboratory's placement policy is to select the best-qualified candidate for an available position, with consideration given to candidates in the following order of priority: (1) present employees within the department and/or appropriate bargaining unit, with preference to those within the immediate work group; (2) present employees within the Laboratory as a whole; and (3) outside applicants. In keeping with the Affirmative Action plan, selection decisions are made without regard to age, race, color, religion, national origin, sex, handicap or veteran status.

Each week, the Personnel Office lists new personnel placement requisitions. The purpose of these listings is, first, to provide open placement information on all non-scientific staff positions; second, to give employees an opportunity to request consideration for themselves through Personnel; and, finally, for general recruiting purposes. Because of the priority preference policy stated above, each listing does not necessarily represent an opportunity for all candidates. As a guide to readers, the listings are grouped according to the anticipated area of recruitment.

Except when operational needs require otherwise, positions will remain open for one week following publication date.

For further information regarding a placement listing, contact the Employment Manager, Ext. 2882.

OPEN RECRUITMENT - Opportunities for Laboratory employees and outside applicants.

2581. SR. STATIONARY ENGINEER (5/18 - 10/2/87) - Requires demonstrated experience in the maintenance, repair, and operation of high pressure boilers firing No. 6 fuel oil. Current stationary or marine engineers license is highly desirable. Plant Engineering Division.

2582. PROGRAMMING POSITION - Requires minimum AAS degree in an appropriate field and expertise in COBOL programming. Will program on-line data bases, which includes coding, testing, flow charting, documenting, installing, and maintenance of programs. Involvement includes budget, payroll, cost reporting and other administrative support activities. Exposure to HP and IBM PC environments helpful. Department of Nuclear Energy.

Autos & Auto Supplies

FORD RIMS - 15" truck w/tires, $15 ea. or $25 pr. Jack, Ext. 7869.

79 SUBARU BRAT - new front fenders, paint, exhaust, good cond., $1,250. Jeanne, Ext. 7742 or 281-7568.

80 PLYMOUTH CHAMP - 111k mi., runs well, good body, 4 spd., w/overdrive, Michelins, am/fm cass., sunroof, $1,200 neg. 689-7494.

77 FORD GRANADA - 4 dr., p/s, p/b, a/c, am/fm radio, $200. Tony, 281-0350.

TIRES - P215/75R15, white walls, steel-belted radial (1) driven 50 mi., (1) driven 16k mi., both for $50. Ext. 2981 or 473-7809.

68 WILLYS JEEP - 4WD, w/6' Meyers snow plow, needs work. 758-2620.

78 BUICK SKYLARK - 2 dr., grey, black vinyl top, needs trans. work, $400 neg. 399-0942.

82 PLYMOUTH CHAMP - 48k mi., new tires, brakes, battery, sunroof, excel. in & out. 363-7032.

80 HONDA PRELUDE - 5 spd., elec. sunroof, Blaupunkt stereo, good cond. 325-0447 after 6 p.m.

78 CORVETTE - mint cond., completely redone top to bottom, white/red interior, asking $11,500. 589-7496.

74 BMW 2002 - blue, good cond. 751-7963 after 6 p.m.

73 CHARGER - mech. sound, new brakes, tuned, good transp., asking $600. 698-4341 after 6 p.m.

80 VOLVO - 2 dr., 4 cyl., standard, very good cond., tan, $4,200. 929-6442 after 6 p.m.

CARBURETOR & MANIFOLD - Ford V8, 351, asking $25; chrome roof rack, full-size, asking $10. Ray, Ext. 3536 or 289-7615.

71 CHEVY NOVA - 2 dr., red/black u/t, 350, very good cond., $1,000; 67 Ford pick-up, short bed, racks, depend., 6 cyl., 3 spd., 475-6797.

84 VIKING - 8' slide-on pop-up camper, 2-way refrig., sink, stove, extras, mint, $3,295. 821-9659.

79 CHEVY MONZA - V6, sunroof, excel. cond., am/fm, a/t, new tires, exhaust, brakes, htchbk., 735-1144.

77 ELDORADO - new tires & exhaust system, am/fm stereo w/tape, good cond., must sell. Ext. 7732.

76 DODGE ASPEN - V8, a/t, p/s, p/b, 120k mi., runs, $425. Ext. 4521.

75 CHRYSLER - station wagon, 116k mi., runs well, $475. Miriam, Ext. 4581 or 3079, eves.

72 PLYMOUTH - full-size station wagon, excel. running cond. Ext. 2022 or 744-8386.

77 VIKING POP-UP - sleeps 8, ac/dc, elec. refrig., good cond., Dan, Ext. 4987 or 698-7322.

75 FORD GRANADA - 3 spd., excel. running cond., $500. Ext. 3015 after Monday.

PICK-UP/CAMPER - 70 Dodge, new parts, old but depend., 8' slide-on w/overcab, gas heat/stove, ice box, clean, ac/dc, make offer, must sell. 286-0064.

78 MERC ZEPHYR - 2 dr., white, 4 spd., clean, high miles, runs well, $700. Walter, Ext. 2050.

77 PLYMOUTH VOLARE - station wagon, p/s, p/b, a/c, $500. 924-7262 after 6 p.m.

80 DATSUN 200SX - 5 spd., htchbk., am/fm tape, a/c, p/b, p/s, good cond., 76k mi., $2,800 neg. Louise, Ext. 3397 or 924-3547, eves.

74 JEEP - 4WD w/70 camper Tagalong, package deal, extras, $4,000. Pete, 399-2813 after 6 p.m.

73 VW SUPER BEETLE - 4 spd., good cond., reliable trans., $700. 765-1302 after 6 p.m.

79 MUSTANG II - 4 spd., high mi., good tires & body, new exhaust, asking $900; 81 Suzuki GS250T, low mi., excel. cond., $690. 929-8287.

77 CAMARO - V8, a/t, black; 73 Capri, stand., decor group, many new parts, must sell. 744-0725.

72 CHEVY TRUCK - new brakes, exhaust, canvas cover, good cond., 8' bed. Frank, Ext. 2375 or 475-5395.

75 CAMARO - 6 cyl., rebuilt engine, stereo, wire wheels, tires w/raised lettering, excel. cond., $2,200. Ext. 2529.

81 YAMAHA XS-650 - special, mag wheels, crash bars, luggage rack, excel. cond., low mileage., $450. Ext. 2168 or 744-4948.

79 PONTIAC LeMANS - a/t, a/c, p/s, fm, good cond., runs very well, $1,750. Ext. 3780 or 331-4578, eves.

86 GMC PICK-UP - loaded, 13k mi., high-rise cap, $12,500; 78 Cougar XR-7, 351, excel. cond., am/fm cass., a/c, new tires, $1,500. Bert, Ext. 2050.

75 FORD LTD - 2 dr., orig. owner, excel. cond. Ext. 2265 or 289-0567, eves.

74 YAMAHA 400MX - dirt bike, just rebuilt, many extras, $300. Jim, Ext. 4986.

85 HONDA - Nighthawk 450, excel. cond., low miles, $1,100. Bruce Kavan, Ext. 2238.

WIRE WHEEL COVERS - set of 4, fits 15" tires, like new. 325-0447 after 6 p.m.

Boats & Marine Supplies

14' SUPER SAILFISH - AMF, good cond. w/shoreline trailer, $750. 265-1308 after 7 p.m.

23' PUMA - f.g. sloop, sleeps 4, hd. galley & dinette, 3 sails, 6 h.p. Evinrude, excel. family boat, $6,500 neg. Walter, Ext. 4605 or 938-8353.

19½' BAYLINER - Capri bowrider, Volvo I/O, trlr., top quality, Coast Guard & ski equip., full canvas, all covers, extras, $9,400. Ext. 2981 or 473-7809.

19' RHODES O'DAY - sailboat, 2 sets of sails, 7½ h.p. Evinrude, swing keel, great cond., $2,800. 727-5980.

19' SAILBOAT - trailer, f.g., Lightning class race, 3 sails, excel. cond. 399-1679.

16' HOBIE CAT - 1976, trailer, good cond., ready to go, $1,500. 821-9659.

18' RENKEN - 1983, I/O, 120 h.p.-O.M.C w/trailer and full cover, excel. cond., $5,900. Ady, Ext. 4531 or 331-3785.

14' BLUEJAY - sailboat, trailer, 3 sails, newly painted, ready to sail, $700. Holroyd, Ext. 4329 or 751-6820.

Miscellaneous

ANNUALS - impatiens, begonias, more, $10/flat; hanging fuschia, $10; geraniums, all colors, $2 ea.; azaleas, field-grown, 2'-3', $5 ea. 744-0722.

SONY STEREO SYSTEM - HP250, am/fm, w/external speakers, new needle, $70; 2 headboards, maple, twin size, $15. Tony, Ext. 2050.

TRUNDLE BED - dresser, 6 drapes, mirror, $250. Joan, 475-8252.

BASEBALL CATCHER'S GLOVE - suitable for 8-12 yrs. old, good cond., $20. 289-8212.

TOP SOIL - screened, delivered, $12 per yd. 924-7746.

RAIL BUS - standard gauge, runs well, $150 or trade for Lionel 2046 loco; walkie-talkies, 2 ea., WWII vintage, w/manual, $25/pair. Jack, Ext. 7869.

DRAPES - length 83"x width 100", tan tones, like new, $10. Ext. 5400 or 874-3447.

SLICING MACHINE - Rival, excel. cond., $25. Ext. 2981 or 473-7809.

COUCHES - (2) 6 cushion, matching, very good cond.; 1 small 4-burner apt. stove. 289-7921 after 5 p.m.

OVEN - Farberware convection; dinette set, 4 chairs, table. 475-0509.

MAN'S SKIS - 205 cm, 20 cm, 10 med. boots, Harts 185 cm woman's skis, 7&8 boots. 475-0509.

FIREPLACE INSERT - best offer, good cond. 475-2509.

ENGAGEMENT RING, 14K gold, .27 carat premium stone & 2 side diamonds, appraised $625, asking $450. Pete, Ext. 7627 or 929-3847.

WASHER/DRYER - Sears, good working cond., $225. 289-5377.

SKIRTS - Calvin Klein Sport, denim, blue - size 10; black - size 12, $10 ea.; blue silk blouse, Pant-Her, size 9/10, $10. Joyce, Ext. 3801 or 289-5770.

MICROWAVE OVEN - large. 475-9452 after 5:30 p.m.

WATER BED FRAME - & headboard, heating unit plus velvet side rails, best offer. Denise, 282-3630.

ENGINE - Briggs & Stratton, 2 h.p., horizontal shaft w/cent. clutch for go-kart, $50. Dan, Ext. 4987.

HUMIDIFIER - large, excel. cond., $35. Dan, Ext. 4987 or 698-7322.

CHAIN - galvanized, ⅜", $1.60 per ft. 399-1679.

STEREO - power amp., QSC model A31, 125/200 watts @ 8/4 ohms. 0.1% THD, excel., $200. Henry, Ext. 5110.

AUTO-THERMOSTAT - Honeywell, energy saving, (2) $40 ea.; Rival meat grinder/chopper, $20. Ext. 2683 or 751-2469 eves./wknds.

TICKETS - (2), LaBoheme, orch., April 11, evening, Metropolitan Opera, $55 ea. Louisa, Ext. 4207 or 286-0466.

OAK TREE REMOVAL - in exchange for the wood. Ext. 4099 or 689-9214.

RADIAL ARM SAW - Sears, $90; flat-bed utility trl., $100; trade 15' Sears rowboat for canoe. Frank, Ext. 2022 or 399-4480.

KITCHEN CABINETS - almost new, wood, almond formica countertops, very reasonable. Ext. 5277.

WASHER - Lady Kenmore, heavy duty, convertible, excel. cond., $250. 758-2620.

SOFA - w/queen size bed, very good cond., $75. Ext. 7505.

TABLE SAW — Sears, 7¼", complete w/access., older model, $75; Agtronic 4 kW generator in orig. box, never used $500. Mark, Ext. 5350 or 369-0793.

CONVECTION OVEN - bake, broil, rotisserie, 2 shelves, roasts turkey to 14 lbs., $25. Betty, Ext. 3382 or 472-1601.

FIREPLACE DOORS - brass & glass, $35; Sears 10 cu. ft. freezer, $135; AMF Devilfish, needs sail, $35. 722-3338.

BIKE - multi-speed, men's touring. Joe, Ext. 2898.

BARBECUE GRILL - $15; mechanic's creeper, $7; auto ramps, $10; Toastmaster Systems III, oven, broiler, large, excel. cond, $40. 273-5574.

LIVING ROOM SET - French Provincial, white, green-blue velvet, 3 sectionals, tables, chairs, excel., $950 neg. 361-7138.

LAWN MOWER - 22" rotary, rear bagger, 3½ h.p., Briggs and Stratton, new; 5' diam. azaleas, U-dig; Franklin stove. 689-9234.

REFRIGERATOR - 24"w x 57"h x 27"d, wish to trade for under-counter model. Bill, Ext. 2378.

PINBALL MACHINE - "Williams", good cond., lots of fun. Rich, Ext. 3499 or 435-4316.

PROM GOWNS - 1950's, size 10, strapless net & taffeta, pink, blue & turq., excel. $50 ea. Ext. 2529.

CAMERA - Honeywell Pentax, 35 mm, lenses, extras, Ext. 3123 or 821-1039.

WATERBED - king-size, headbd., 6 drawer base, padded rails, heater, gloss walnut/polyurethane finish, excel., $300. Henry, Ext. 5110.

REFRIGERATOR - 10 cu. ft., 24" elec. stove, 5' almond countertop with s/s sink & faucet, 2 base cabinets, all for $325. 751-8240 eves.

FORSYTHIA BUSHES - 3'-4', ready to bloom, $6; also a few French lilac and native holly. Chris, 878-0621.

BICYCLE - Ross, man's, Shimano components, 12 spd., 21" frame, 27" wheels plus extras, 2 mos. old. Ext. 2022 or 744-8386.

TRASH COMPACTOR - Sears Kenmore, like new, walnut panels, free standing/under-counter, best offer. 758-9197.

MONITOR - for PC, monochrome, Tandy (Radio Shack), excel. cond., paid $140, asking $90. John, Ext. 3292 or 286-1348.

VIOLIN - full-size, $200; bikes, man's 26", $35; girl's 20", $20; boy's Huffy, 20", $20. 744-0722.

REFRIGERATOR - Frigidaire, 21 cu. ft., 6' freezer top, $350; chest freezer, 9 cu. ft., $150, both 2 yrs. old. V. LoDestro, Ext. 5010 or 821-6499.

DINING ROOM SET - maple drop-leaf table, 42"x63", 6 chairs, $250; 5' sofabed, Lawson style, blue, very good cond. $250. 286-8229 after 6 p.m.

BEDROOM SET - single, white, Ethan Allen, like new, 7 pieces plus, asking $900. 286-1213, eves./wknds.

PATIO DOOR - 8', dbl. glass, $200; alum. sliders, various sizes, 6'x5', 4'x5', many more w/storms & screens, best offer. Al, Ext. 3492 or 331-1003.

Lost & Found

WALLET - small red/brown with dr. license, credit cards, registration, at laundry? Reward. No questions. John, Ext. 2671.

Car Pools

LIE EXIT 54 - Wicks Rd., driver needed, 4-man car pool, 8:30-5:00. Mike, Ext. 2705.

OAKDALE-BOHEMIA - would like to form car pool. Frank, Ext. 2314.

Free

FUEL OIL TANK - you pick up. Ext. 3658 or 281-4547 eves.

Yard Sale

SOUTH HOLTSVILLE - Cub Scouts Pack 80 garage sale, 5446 Expressway Drive, 4/4/87, 9 a.m. - 4 p.m., raindate 4/11/87.

Real Estate

Real Estate advertised for sale or rent is available without regard for the race, color, creed, sex or national origin of the applicant.

For Rent

NORTH SHIRLEY - 3 bdrm. apt., full bath, cable, l/r, eik, appl., 7 min. to Lab, avail. now, $750 inc. fuel & elec. 395-1084.

HILTON HEAD, SC - 2 bdrm. cond., sleeps 6, extas, golf, tennis, beach, pool, $300/wk before 4/11, $400/wk after 4/11. 585-9149.

SELDEN - Village in the Woods, spacious 1 bdrm. apt., eik, cent. a/c, w/w carpet, 1 yr. lease, avail. June 1, $625/mo. incl. heat and gas cooking. Lynn, Ext. 2780 or 732-7954 after 6:30 p.m.

LONDONDERRY - VT chalet, 4 bdrm., 2½ bath, stone fpl., on pond w/swim & boating, hiking trails, near lake, summer music festivals, theater, horseback riding, antiques, rent wkly. 757-5599.

E. YAPHANK - 2 large rms., unfurn. w/kitchenette, priv. entrance, no children/pets, util. & cable incl., $600/mo. + sec. 281-5781 after 5:00 p.m. & wknds.

For Sale

PORT JEFF./SETAUKET - 4 bdrm., 2½ baths, den, garage, deck, dry bsmt., well-insulated, mint cond., on wooded ⅓ acre, $210,000. 928-0281.

SHOREHAM - 3 bdrm., ranch, l/r, d/r, eik, fam. rm., heavily wooded acre, SWR schools, taxes $1,200. $129,000. Ed, Ext. 7786 or 744-7796.

WILDWOOD, FL - Central, off Rt. 301, mobile home, $1,500 down, take over bank payments, 1987 model, more info. Carol, 878-0885.

POCONOS - 3 bdrm. chalet, l/r, d/r, family rm., w/wood burning stove, kitchen, w/w, garage, paved roads, pools, lake, clubhouse, tennis, guarded entrances, more. $110,000. 286-4652.

EAST QUOGUE - newly renovated ranch on landscaped ½ acre, 3 bdrms., 2 bathrms., eik, full bsmt., oak floors, many extras, $165,000. 653-9514 eves./wknds.

PORT JEFF. STA. N. - 3 bdrm. ranch, vinyl siding, Andersens, attached garage., large deck, full basement. 928-6944.

AQUEBOGUE - 3 bdrm., 1½ baths, att. gar., eik, 1 yr. old, ¾ acre, near Peconic Bay, $150's. 722-4513.

PORT JEFF. STA. - ranch, 75x200, mint, 3 bdrm., d/r, l/r, kit., gar., full bsmt., gas hot air, low taxes, new vinyl siding, new roof, $124,990. 473-3328.

Wanted

TENOR - & Bass for on-site Octette. Janet, Ext. 2345 or John, Ext. 2617.

TRUCK CAP - to fit Chevy C-10 pickup, 6½' bed. Roman, Ext. 3658 or 281-4547 eves.

TRAINS - Lionel, American Flyer, access., any cond., brings good price. Carole, Ext. 3362 or 924-4087 eves.

HOBIE CAT SAILORS - in Port Jeff./Stony Brook area, interested in starting informal club? 689-8685.

FRENCH TUTOR - for ninth grader. Ext. 3811 or 744-4789.

CARING PEOPLE - for Muscular Dystrophy Association charity drive, donations and/or time. Dave or Debbie, 929-3620 eves.

WICKER - couch, loveseat or rocker, good cond., reasonable. 286-3847.

BLOOD - son of Mr. Stein, kindergarten teacher, South Manor School, needs B neg. blood, L.I. Jewish Hospital. Fran Hille, Ext. 3319 or 281-4492.

Services

*Services are listed as a courtesy to BNL employees. They are neither screened nor recommended by the **Bulletin**.*

MAGICIAN - children's parties, lab discount, sculptured balloons, book early, brochure avail. 395-3963.

ROTOTILLING - will do lawns & gardens, Troy Gilt Rototiller. Bob, 732-9517.

TAX PREPARATION - by tax consultant, your home or mine, reasonable. John, 732-2472.

MATH TUTORING - grades K-12, Math I & II, reasonable rates. 744-4170.

BABYSITTING SERVICE - Centereach area, my home, Mon.-Fri., reasonable rate. Noreen, 737-2678.

LAWN MAINTENANCE - & office cleaning, reasonable rates, at your convenience. Clinton, 727-6369 morn./eves./wknds.

PLUMBER - licensed plumber for all your plumbing and heating needs. Mike, Ext. 2841 or 369-1597.

BRICKWORK - patios, walks, swim pools, Belgium block, landscape ties. Tony, 698-9274.

LAND CLEARING - using excel. rake on JD 450 track loader, $55/hr. w/operator. Tom, Ext. 4084 or 878-1060.

CHILDREN'S MAGIC SHOWS - inexpensive, ask for Adamdini, 821-1039.

CEMENT WORK - driveways, patios, cellar, entrances, spackle & tape. 475-8285 or 281-2391.

TREE REMOVAL - free estimates, specializing in storm damage. Ken, 289-8212.

In Appreciation

My family and I would like to express appreciation for your concern and condolances upon the death of my mother, Emma B. Kemp.

— Steve Kemp, NSLS

The participants of the Celestial Navigation Course would like to thank our teacher Eric Forsyth for the donation of his valuable time and efforts.

Many thanks to all who came to my retirement party, sent cards, flowers and telephoned with good wishes. I will miss you all.

— Marge Stoeckel

Ads left out of this issue due to lack of space need not be re-submitted to appear in the next issue.