BROOKHAVEN BULLETIN
Vol. 42 - No. 9 March 4, 1988
BROOKHAVEN NATIONAL LABORATORY

Pipe Dream Coming True as Work Starts On Central Chilled Water Facility

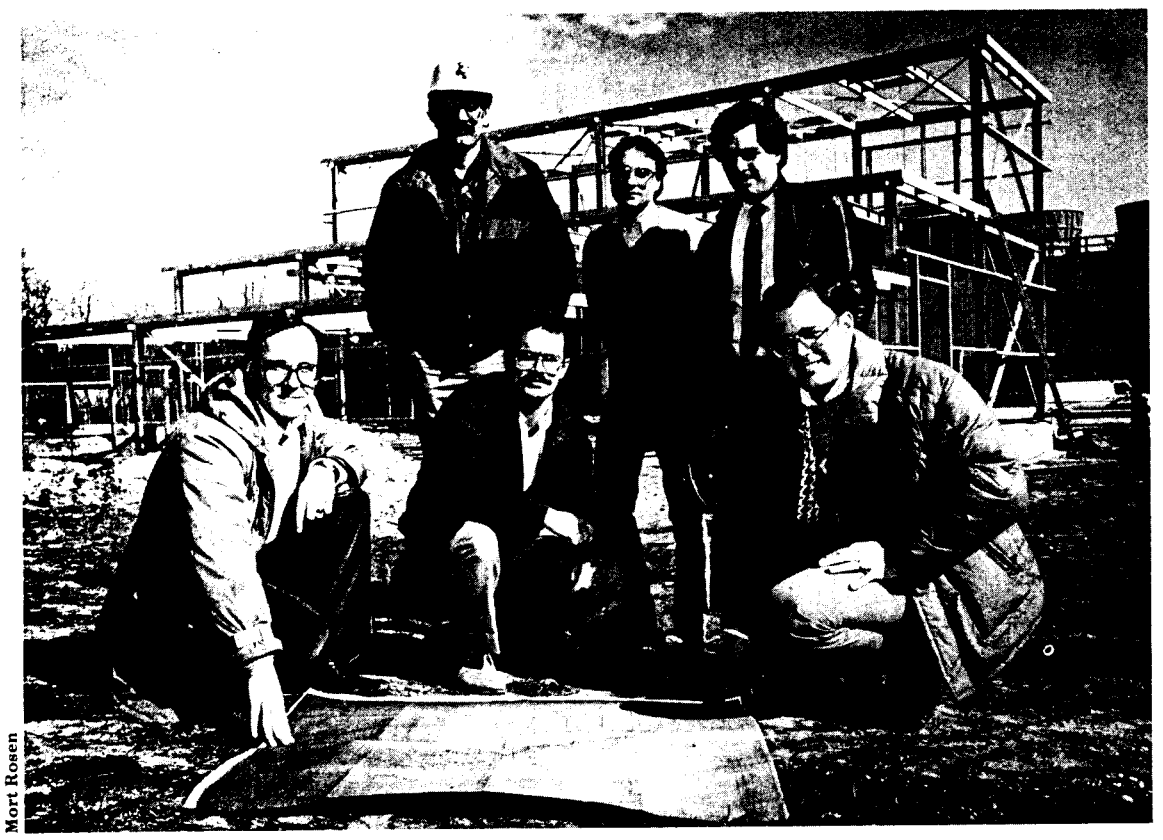

Mort Rosen

At the site of the Central Chilled Water Facility on Rochester Street are: (front, from left) Mark Culp, Plant Engineering (PE); Michael Nugent, PE, Edward Murphy, PE; (back, from left) William Britz, United Engineers and Constructors; Kenneth Testa, PE; and Michael Furey, Contracts and Procurement.

At this time of year, many people think longingly about the coming spring and make plans for digging their garden. A team of engineers in the Plant Engineering (PE) Division is way ahead of them though. The PE team's thinking is centered on the spring *after* next, and their present plans for digging holes for pipes are going to outdo all the gardeners from the Lab combined.

So what's going to happen in spring 1989? That's the expected completion date of the Central Chilled Water Facility Project, which, after a cold start, has been approved, funded and is now well under way.

"The new plant will produce 5,000 tons of chilled water and 1,500 standard cubic feet per minute (scfm) of compressed air," said Engineer Edward Murphy, Project Manager. "It will supply six buildings on site: Applied Math [Bldg. 515], Biology [463], the Hot Lab [801], Medical [490], the old Graphite Reactor [701, 703] and Physics [510]."

Murphy explained that the new system will be more efficient and less expensive than these buildings' current air-conditioning and compressed air systems. It will also allow obsolete equipment in some of the buildings to be replaced. "Another advantage," he said, "will be in water conservation. At present, the Medical Research Center uses well water. Altogether, the new plant will save about 2,400 gallons a minute."

Even though the central chilled water project will seem new to most people on site, to the PE team, it's a more of an old dream come true.

"We first proposed the project in May 1971," said Robert Terwilliger, Senior Project Engineer. Terwilliger worked on the design with Joseph Rose, who was Project Manager before he retired in January 1988 as Manager, Engineering.

Rose and Terwilliger were also teamed on a retrofit improvement of ALF (alternate liquid fuel), a system Rose developed in 1977, in which a blend of inexpensive fuels could be used in the Lab's steam plant. The idea saved BNL over seven million dollars. In 1983, Rose won a Department of Energy (DOE) award for In-House Energy Management because of his "individual initiative and effort" on the ALF project.

Improving efficiency and costs of the steam plant was successful, and PE was keen to do the same for air-conditioning.

"So, every year except one, Joe and I re-proposed the plan," said Terwilliger. "But funding was short, and other projects took precedence. We kept trying. At last, in fiscal year 1985, we were funded and able to start."

The foundation and structure of the new plant have been constructed on Rochester Street, just south of the service station. A large cooling tower has already been installed as have new electric feeders to power the plant, designed by Project Electrical Engineer Thomas Nehring. Other work being done now includes modification of existing systems in the buildings where the air-conditioning will go. In charge of this and of procuring chillers and compressors for the plant is Project Engineer Kenneth Testa.

"So, when we get the holes dug and the pipes in, we'll be ready to hook everything up," said Project Engineer Mark Culp, another member of the team. "The biggest pipe we've got is 42 inches in diameter — that will take the water from the cooling tower to the plant. The smallest are two-and-one-half-inch pipes to take compressed air to the buildings. Altogether we'll install 14,000 feet of water piping, 7,000 feet each way, and 7,000 feet of pipe for compressed air, one way. There'll be a lot of digging this summer."

The plant will contain three 1,200-ton capacity centrifugal chillers and one 1,200-ton steam absorption chiller. The chillers will refrigerate 11,500

(Continued on page 2)

Town Meeting In Berkner

Congressman George Hochbrueckner will hold a Town Meeting in Berkner Hall, on Monday, March 7, from noon to 1 p.m. All employees are invited to attend this meeting, which will focus on the special concerns of the BNL community.

Alfred Wolf, Joanna Fowler Share Chemistry Award

Alfred Wolf and Joanna Fowler of the Chemistry Department are winners of the 1988 Gustavus John Esselen Award for Chemistry in the Public Interest. They will share the award, which consists of $5,000 and the Esselen Medal. The award is given annually by the Northeastern Section of the American Chemical Society.

Wolf and Fowler are well-known for their pioneering work on positron emission tomography (PET), a technique that uses radiotracers to study organs and metabolic processes in the human body. At present, their research is focused on brain tumors and mental disorders such as schizophrenia, Parkinson's disease and Alzheimer's disease.

The PET work is an outgrowth of research that has been ongoing at Brookhaven for about 30 years. It is an example of basic research that has led to direct applications in the diagnosis and management of human disease.

The Esselen Award recognizes and rewards chemists whose scientific and technical work has contributed to the public well-being. The award is a memorial to Gustavus John Esselen, who made distinguished contributions to chemistry and chemical engineering. Among these was the development of anhydride curing agents for epoxy resins and of poly (vinylbutyral) as an improved material for safety glass, both of which enjoyed considerable commercial success.

Alfred Wolf, who holds a Ph.D. from Columbia University, joined the Chemistry Department in 1951 and served as Department Chairman from 1982 through 1987. He is director of Brookhaven's PET program.

In addition to the Esselen Award, Wolf is the recipient of several other notable awards. Most recently, he was honored with the George von Hevesy Foundation of Nuclear Medicine's Hevesy Memorial Award, and he and his group received the Javits Neuroscience Investigator Award from the National Institute of Neurological and Communicative Disorders and Stroke.

Joanna Fowler received her Ph.D. from the University of Colorado in 1967. After a year of research at the University of East Anglia in England, she joined the Chemistry Department in 1969.

Fowler has been a special consultant and member of the Diagnostic Radiology Study Section of the National Institutes of Health and a reviewer for the U.S. Department of Energy. She serves on the Committee on Nuclear and Radiochemistry of the National Research Council.

Mort Rosen

Joanna Fowler and Alfred Wolf

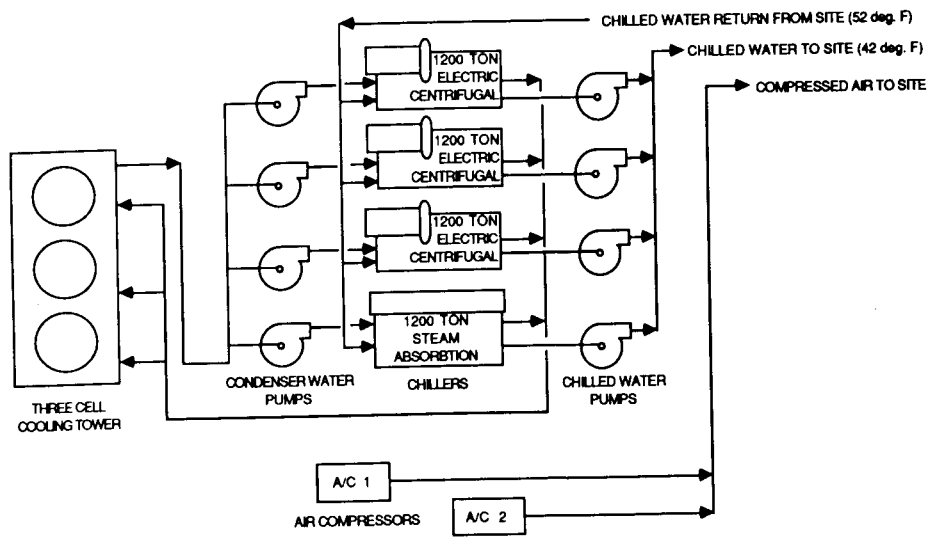

Central Chilled Water Facility Flow Schematic

Chilled Water (cont'd)

gallons per minute of water to 42°F. The water will go through the 7,000 feet of pipes to cool buildings around the site and return at 52°F through another 7,000 feet of pipes to be re-chilled. Heat removed from the chilled water is rejected to the atmosphere through the cooling tower.

At the same time, two 750 scfm rotary screw air compressors will produce oil-free, low dew point (dry) compressed air suitable for most laboratory uses.

"It works like a giant home refrigerator," said Murphy. "The design is by United Engineers and Constructors in Boston, Massachusetts, whose field representative at the construction site is Bill Britz. Since the project is made up of three procurements and five contracts, we are working closely with the Division of Contracts and Procurement [DCP]."

For their help in DCP, Murphy credits Michael Furey, Senior Contracts Specialist; Anthony Salvo, Administrator; John Russell, Senior Contracts Specialist; Richard Hill, Procurement Supervisor, now retired; Dennis Hall, Buyer; and Frederick Altrui, Purchasing Agent.

The last part of the project is an Energy Management Control System, of which Staff Engineer Michael Nugent is in charge. This system will use microcomputers to control the amount of heating and air-conditioning in the six buildings.

"We're funded at $15 million for the project," said Murphy. "Once it's running, besides the advantages we've mentioned, we expect to see substantial savings that will pay back the initial outlay."

Future plans include an addition to the Central Chilled Water Facility. PE is studying the different Lab buildings and cooling loads to be served in the second phase.

— Liz Seubert

Coming Up

Ted Ginsberg, a mechanical engineer in the Department of Nuclear Energy, will deliver the next Brookhaven Lecture, on Wednesday, March 16, at 4:30 p.m., in Berkner Hall. He will speak about "Experimental Modeling of Severe Nuclear Reactor Accident Phenomena."

Patent Awarded

Saed Mirzadeh, a former BNL employee and now a Research Collaborator in the Medical Department, and **Richard Lambrecht**, a former BNL employee and now a Research Collaborator in the Chemistry Department, were awarded U.S. Patent No. 4,681,727 for inventing a commercially practical process that produces the radioisotope astatine-211 (At-211) for radiopharmaceutical use.

At-211 decay results in nearly pure alpha particle emissions. The radiotoxicity of these emissions and those resulting from the decay of one of At-211's daughters, polonium-211, which has a half-life of only about 0.56 seconds, have great potential for certain medical treatments and fundamental studies in cell biology.

The half-life of At-211 itself is 7.21 hours, sufficient time for its production, chemical synthesis, transportation, quality control and application. However, in the past, radiochemical separation of At-211 was generally unreliable, with low, variable recovery yields.

For an At-211 radiopharmaceutical to have clinical applications, the production process must reliably and consistently yield small, controlled volumes, in specified forms.

This has been achieved with the new process, a one-step distillation and collection procedure. The process consistently yields a controllable volume of pure At-211 in a choice of solvents, any of which is compatible with one of several radiopharmaceutical procedures. It is also possible to produce At-211 in the chemical form of Astatide, used for studies of the physical and chemical properties of the element.

Performance Summary Investment Options

In February 1982, mutual funds were added as investment options for voluntary employee tax-deferred contributions under the AUI retirement program. In order to provide Laboratory employees with information concerning the various investment opportunities available under the AUI retirement program, the Personnel Division has again compiled the performance records for the TIAA-CREF Regular and Supplemental Retirement Annuities and the Fidelity and T. Rowe Price funds.

Values as of 12/31/87, for monthly contributions of $100 started 1/1/87, 1/1/86, 1/1/84 and 3/1/82.

Past performance (hypothetical accumulations with dividends and capital gains reinvested and all expenses deducted). Security prices can fluctuate considerably, so these yields should not be considered as representative of future earnings.

Date Contributions Commenced	1/1/87	1/1/86	1/1/84	3/1/82
Total Contributions	$1200	$2400	$4800	$7000
TIAA — CREF				
Regular				
TIAA	$1253	$2630	$5957	$ 9781
CREF	1009	2246	5941	10583
SRA				
TIAA*	1234	2589	5866	9634
CREF**	992	2211	5850	10426
Fidelity Group Funds				
Money Market Funds				
Cash Reserves	1243	2562	5528	8768
U.S. Government Reserves	1241	2554	5501	8694
Income Funds				
Flexible Bond	1216	2488	5840	9641
Ginnie Mae	1221	2517	N/A	N/A
High Income	1182	2488	6053	10575
Intermediate Bond	1226	2522	5929	9856
Mortgage Securities	1230	2535	N/A	N/A
Growth & Income Funds				
Balanced	1152	N/A	N/A	N/A
Equity Income	1067	2300	5781	10450
Fidelity	1065	2321	5932	10340
Growth & Income	1078	N/A	N/A	N/A
Puritan	1096	2363	6003	10818
Growth Funds				
Capital Appreciation	1110	N/A	N/A	N/A
Contrafund	996	2199	5474	9025
Freedom	1073	2374	6203	N/A
Europe	1114	N/A	N/A	N/A
Growth Company	1046	2208	5720	N/A
Magellan	1039	2297	6437	12336
OTC	1043	2215	N/A	N/A
Overseas	1131	2872	N/A	N/A
Pacific Basin	1183	N/A	N/A	N/A
Trend	1015	2163	5426	9308
Value	1007	2102	5083	8629
Select Portfolios				
Air Transportation	904	1906	N/A	N/A
American Gold	1203	3083	N/A	N/A
Automation & Machinery	955	N/A	N/A	N/A
Automotive	1045	N/A	N/A	N/A
Biotechnology	970	1997	N/A	N/A
Broadcast & Media	1168	N/A	N/A	N/A
Brokerage	783	1499	N/A	N/A
Capital Goods	961	N/A	N/A	N/A
Chemical	1111	2568	N/A	N/A
Computer	935	2077	N/A	N/A
Defense	911	1806	N/A	N/A
Electric Utilities	1058	N/A	N/A	N/A
Electronics	916	1788	N/A	N/A
Energy	1027	2323	5058	8324
Energy Services	886	1912	N/A	N/A
Financial Services	982	1948	5236	10008
Food and Agriculture	1073	2400	N/A	N/A
Health	985	2194	6370	11357
Housing	926	N/A	N/A	N/A
Industrial Materials	1089	N/A	N/A	N/A
Leisure	1066	2286	N/A	N/A
Life Insurance	950	1796	N/A	N/A
Medical Delivery	1002	N/A	N/A	N/A
Paper & Forest	1031	N/A	N/A	N/A
Precious Metals	1166	3108	6563	10132
Property & Casualty Insurance	1013	1993	N/A	N/A
Regional Banks	1082	N/A	N/A	N/A
Restaurant	1040	N/A	N/A	N/A
Retailing	969	2060	N/A	N/A
Savings and Loan	1029	2140	N/A	N/A
Software	1058	2402	N/A	N/A
Technology	917	1904	4010	6680
Telecommunications	1146	2607	N/A	N/A
Transportation	934	N/A	N/A	N/A
Utilities	1108	2259	5945	10764
T. Rowe Price Funds				
Money Market Funds				
Prime Reserve	1240	2551	5499	8730
Income Funds				
GMNA	1216	2503	N/A	N/A
International Bond	1410	N/A	N/A	N/A
High-Yield	1211	2547	N/A	N/A
New Income	1235	2534	5844	9662
Short-Term Bond	1241	2547	N/A	N/A
Growth & Income Funds				
Equity Income	1121	2487	N/A	N/A
Growth & Income	1049	2193	5130	N/A
Growth Funds				
Capital Appreciation	1156	N/A	N/A	N/A
Growth Stock	1086	2399	6391	10735
International	765	1582	4424	7895
New American Growth	1012	2089	N/A	N/A
New ERA	1149	2631	6574	11429
New Horizons	996	2041	4674	7537

* Includes 1½% expense charge which was eliminated on 1/1/88.
** Includes 1½% expense charge which was reduced to ½% on 1/1/88.
N/A = Funds not in existence for the full time period were excluded from this comparison.

Unabridged Enthusiasm

The room is full of people, but it's quite quiet.

"Seventy pounds . . . 80 pounds . . . 90 . . . 95 . . . 96 . . . ," says the engineer, reading out the stress level.

All eyes are fixed on the glued-together arrangement of balsa wood that is taking the strain.

Creak . . . crunch . . . CRACK!

Tension is released, everyone claps and cheers — and another bridge in the Model Bridge Contest has been demolished by the BNL stress tester. The next bridge is lowered into place . . . then the next, and the next . . . . Eventually, the winner is determined by an efficiency ratio — it is the bridge that supports the greatest load per gram of its own mass.

This scene could have occurred at any of the Model Bridge Contests for high school students held annually at the Lab since 1981.

The most recent competition, held Saturday, February 27, attracted 412 entrants. This year, for the first time, the contest was divided into two regions: East, for schools in Suffolk County; and West, for Nassau and New York City area schools. Thus, this year, four students instead of only two were qualified for the National Model Bridge Contest, which will be held at BNL on April 30 (see box).

The bridges had to be built to given specifications of length, width and maximum weight. Coordinating the contest were Janet Tempel and Eloise Gmur, Public Affairs. Engineering and technical expertise was provided by Marty Woodle, National Synchrotron Light Source Department; Bill McGahern, Alternating Gradient Synchrotron Department; Don Horne, Department of Applied Science (DAS); and Carl Klamut, DAS.

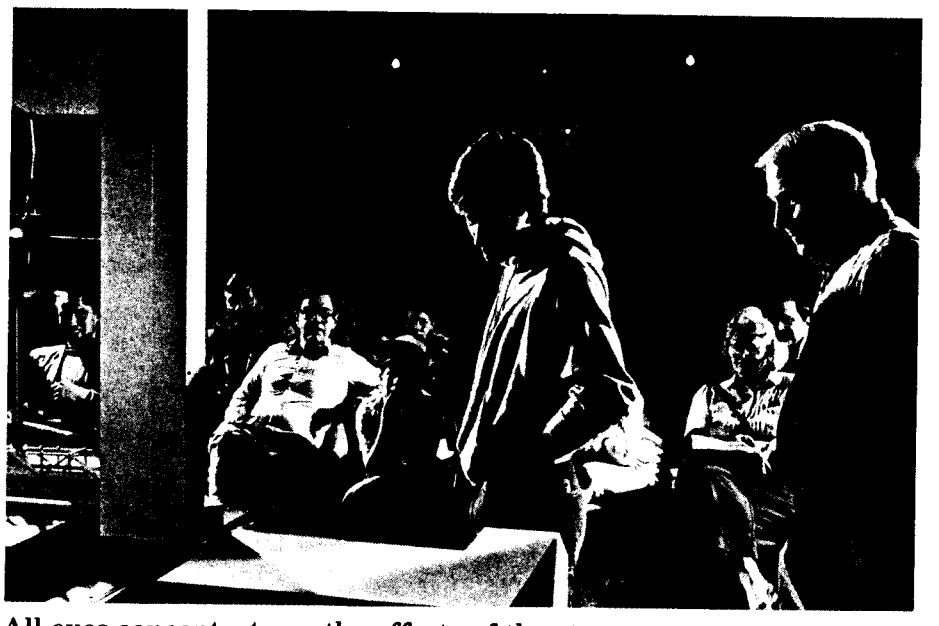

All eyes concentrate on the effects of the stress tester on the current bridge being tested.

Photos by Peter Horton

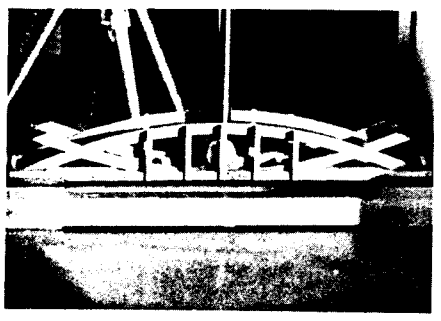

Aesthetic Merit prizewinning bridge by Timothy Smith, Longwood High School.

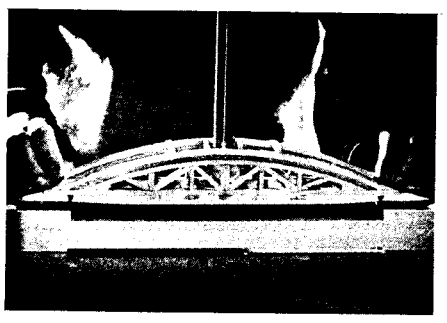

Aesthetic Merit prizewinning bridge by Miroslaw Hrycak, Glen Cove High School.

1988 Model Bridge Contest Winners

Region	Prize	Winner	High School	Bridge Weight	Load Supported
East	1st	*Warren Kohm	Cold Spring Harbor	45 g	212 lb.
	2nd	*Steven Kamer	East Islip	49 g	199 lb.
	3rd	Edward Bak	Cold Spring Harbor	48 g	186 lb.
	Aesthetic Merit	Timothy Smith	Longwood	NA	NA
West	1st	*Hyung Kim	Herricks	36 g	140 lb.
	2nd	*Adam Herman	Herricks	32 g	100 lb.
	3rd	Alex Monte-Sano	Rye Neck	46 g	136 lb.
	Aesthetic Merit	Miroslaw Hrycak	Glen Cove	NA	NA

*Eligible for the National Model Bridge Contest, April 1988.

Inside Info

Carl B. Dover, Senior Physicist in the Physics Department, has been elected a recipient of a Senior U.S. Scientist Award from the Alexander von Humbolt Foundation. The aim of this award is to promote scientific cooperation between scholars in the Federal Republic of Germany and other countries. Under the award, Dover will spend a year doing research on theoretical nuclear physics at the University of Tübingen. He plans to divide the year into smaller periods, beginning with the summer of 1989. Dover, a member of Physics's Nuclear Theory Group, has been at BNL since 1971.

Cooking Exchange

The next meeting of the International Cooking Exchange will feature a ploughman's pub lunch and an English tea. The respective offerings of each include crusty breads, cheeses and chutneys, and Victorian sponge cake, shortbread, scones and Grosmere gingerbread, along with a cup of Earl Grey or Darjeeling.

For a donation of $2 per person towards the ingredients, attendees may sample English cookery from the recipes to be demonstrated. The meeting will be held on Wednesday, March 9, from 12:30-2:30 p.m., in the Recreation Building. All Brookhaven employees, guests and spouses are invited; babysitting will be available at 50¢ per child.

BROOKHAVEN BULLETIN

Published weekly
by the Public Affairs Office
for the employees of
BROOKHAVEN NATIONAL LABORATORY

ANITA COHEN, Editor
MARSHA BELFORD, Assistant Editor
LIZ SEUBERT, Reporter

35 Brookhaven Ave., Upton, N.Y. 11973
(516)282-2345

Service Awards

The following employees received service awards during the month of January:

Thirty-Five Years

Donald W. Huszagh ..... App. Science
John R. Weeks ..... Nuc. Energy

Thirty Years

Adolph E. Densieski ..... AGS
Eugene S. Kaplan ..... AGS
Joseph M. Savino ..... Nuc. Energy
Stanley Seltzer ..... Chemistry

Twenty-Five Years

Stanton Ehrenson ..... Chemistry
Chia-Jung Hsu ..... Nuc. Energy
Edward C. Iberger ..... Plant Eng.
William E. Lebitski ..... Sup. & Mat'l
Marie A. Susa ..... Medical

Twenty Years

Charles T. Bellizzi ..... Light Source
D. Gerd Dimmler ..... Instrum.
Naomi R. Pappas ..... Medical

Ten Years

Roy R. D'Alsace ..... Light Source
Samuel H. Aronson ..... Physics
Warren W. Baumbach ..... Plant Eng.
James R. Cullen Jr. ..... Accel. Dev.
Jeanne Danko ..... Nuc. Energy
Ludwig Frey ..... Cent. Shops
Walter W. Frey ..... AGS
John J. Gallagher ..... Light Source
James W. Gordon ..... Cent. Shops
Mohsen Khatib-Rahbar .. Nuc. Energy
Jerome Lamontagne .... App. Science
John R. Lemmon ..... MIS
Raymond LoPresti ..... Cent. Shops
Alfred J. Minn ..... Physics
Leon K. Peker ..... Nuc. Energy
Hue-Anh T. Pham ..... AGS
Albert M. Pinto ..... Cent. Shops
Ernst M. Sohn ..... Cent. Shops
Helen K. Todosow ..... Nuc. Energy
Arthur J. Waligura ..... Nuc. Energy

The following employees received service awards during the month of February:

Forty Years

Bronislas M. Orlowski .... Tech. Info.

Thirty-Five Years

James T. Gilmartin ..... S&EP
Vincent J. Kovarik ..... AGS

Thirty Years

George E. Oldham ..... Plant Eng.
Vincent P. Racaniello .. Light Source
Richard C. Richardson ..... Instrum.
Adolf W. Rosenka ..... Cent. Shops
Donald H. Stonebridge ..... Reactor

Twenty-Five Years

Dominic DeAngelis ..... S&EP
Robert S. Frankel ..... AGS
Everett S. Harris ..... AGS
Keith W. Jones ..... App. Science
Gerald J. Mayman ..... Physics
Robert L. Mosley ..... S&EP
Dale A. Norden ..... Accel. Dev.
John W. Olness ..... Physics

Twenty Years

Veronica A. Evans ..... App. Math.
Frank E. Kito ..... Biology
Edward J. Woessner ..... Plant Eng.

Ten Years

Lief A. Ahrens ..... AGS
Maria A. Apelskog ..... Tech. Info.
Robert M. Brady ..... Plant Eng.
John Brodowski ..... AGS
Michael J. Carroll ..... Physics
William L. Chaloupka ..... Plant Eng.
Robert P. DiNardo ..... Instrum.
Walter R. Ducoing ..... Cent. Shops
George L. Ganetis ..... Accel. Dev.
Edward J. Hoey Jr. ..... AGS
Alexander N. Mallen ..... Nuc. Energy

Volleyball

Standings - Week of February 22

League I		League II	
Upfagrabs	37-5	Nuts & Bolts	27-9
Dinkers	31-11	Set-Ups	25-11
Xrayted	24-18	Chunga's Revenge	20-16
Phoubars	15-27	Fossils	20-16
Cannonballs	13-29	Slammers	18-18
Bumpers	6-36	Upton Ups	10-26
		Photons	6-30

League III		Open League	
Sourcerers	31-11	Dakota	30-6
Printouts	29-13	Phoenix	29-7
Spikes	27-15	Serendipity	27-9
Renegades	22-20	Not Too Bad	15-21
Screwballs	20-22	Rowdy Radicals	11-25
MISfits	20-22	Duituits	7-29
Airheads	12-30	Leftovers	7-29
Good Times	7-35		

Bowling

Red/Green League

High games were bowled by P. Pietraski 245/608 scratch, A. Warkentien 237, J. Muller 222, K. Riker 222, H. Marshall 217, R. Sick 215, J. Connelly 212, J. Roesler 212, E. Meier 208/204, R. Mulderig 204, N. Combatti 203.

White League

Clem Auguste rolled a 200, Mary Scheidet 194/181, Pat Manzella 184.

Purple League

Ed MacDougall had a 219, Nancy Mayeski 212, Ed Beadle 204, Ed Meier 204, Renee Flack 202, Joyce Pinelli 190, Sharon Smith 187, Jeanne Penoyar 182, Joe Sheehan converted the 4/10 split.

Scotch Doubles

The Scotch Doubles Bowling Tournament, open to all, will be held Sunday, March 15, starting at 1:30 p.m., at Port Jeff Bowl. This is strictly a fun affair, and, participants need not be bowlers. The cost has been revised to $24 per couple, which includes bowling, prizes and buffet. Applications can be obtained at the BERA Sales Office or by calling Maria Apelskog, Ext. 3138.

Camera Club

The Camera Club is offering a series of classes on a variety of photographic topics. Starting with basic photography, the course will include classes on: composition, lighting, black & white developing and enlarging, color printing, portraiture, nature and travel photography, and more. For information, contact Lew Jacobson, Ext. 5193.

Arrivals & Departures

Arrivals

Sergiu Sanielevici ..... Physics
Carolyn L. Schwarz ..... Chemistry
Judith L. Spara ..... Staff Serv.

Departures

This list includes all employees who have terminated from the Laboratory, including retirees:

Benjamin J. Buchalter ..... Physics
Joan M. Frye ..... Chemistry
Debra S. Gilbert ..... Plant Eng.
Robert C. Haffer ..... Plant Eng.
Joseph T. Russo ..... Physics
Ram B. Sharma ..... Chemistry

All film badges will be changed tomorrow. Please place your badge in its assigned rack space before leaving work today.

In Stormy Weather:
Dial 282-INFO

Cafeteria Menu

Week of March 7

Monday, March 7

Chicken noodle soup	(cup)	.75
	(bowl)	.95
Braised brisket of beef w/gravy & 1 veg.		2.95
Broccoli & cheddar quiche w/1 veg. (lite weight)		2.85
Hot deli: Baked ham	(bread)	2.75
	(roll)	2.85
	(hero)	2.95

Tuesday, March 8

Cream of tomato soup	(cup)	.75
	(bowl)	.95
Savory baked chicken w/1 veg.		2.85
Skinless baked chicken w/1 veg. (lite weight)		2.85
Beef stew w/buttermilk biscuit		2.95
Hot deli: Sloppy Joes on a bun		2.85

Wednesday, March 9

French onion soup	(cup)	.75
	(bowl)	.95
Baked stuffed pork chop w/1 veg.		2.95
Eggplant parmigiana w/garlic toast & 1 veg. (lite weight)		2.85
Hot deli: Roast breast of turkey	(bread)	2.75
	(roll)	2.85
	(hero)	2.95

Thursday, March 10

Minestrone	(cup)	.75
	(bowl)	.95
Baked meatloaf w/gravy & 1 veg.		2.95
Fillet of fish Parisienne w/1 veg. (lite weight)		2.85
Fettuccine carbonara w/1 veg.		2.75
Hot deli: Chicken filet supreme sandwich		2.85

Friday, March 11

New England clam chowder	(cup)	.75
	(bowl)	.95
Pasta primavera w/1 veg. & garlic toast		2.85
Beef & vegetable stir-fry over rice		2.95
Baked fish w/lemon butter & 1 veg. (lite weight)		2.95
Hot deli: Pastrami	(bread)	2.75
	(roll)	2.85
	(hero)	2.95

Classified Advertisements

Placement Notices

The Laboratory's placement policy is to select the best-qualified candidate for an available position, with consideration given to candidates in the following order of priority: (1) present employees within the department and/or appropriate bargaining unit, with preference to those within the immediate work group; (2) present employees within the Laboratory as a whole; and (3) outside applicants. In keeping with the Affirmative Action plan, selection decisions are made without regard to age, race, color, religion, national origin, sex, handicap or veteran status.

Each week, the Personnel Office lists new personnel placement requisitions. The purpose of these listings is, first, to provide open placement information on all non-scientific staff positions; second, to give employees an opportunity to request consideration for themselves through Personnel; and, finally, for general recruiting purposes. Because of the priority preference policy stated above, each listing does not necessarily represent an opportunity for all candidates. As a guide to readers, the listings are grouped according to the anticipated area of recruitment.

Except when operational needs require otherwise, positions will remain open for one week following publication date.

For further information regarding a placement listing, contact the Employment Manager, Ext. 2882.

LABORATORY RECRUITMENT - Opportunities for Laboratory employees only.

2804. SECRETARIAL POSITION - Requires AAS in secretarial science or equivalent experience and a good knowledge of Laboratory policies and procedures. Will perform diverse secretarial duties for Neutral Beam Division. MICOM word processing experience required. IBM/PC experience desired. Department of Nuclear Energy.

OPEN RECRUITMENT - Opportunities for Laboratory employees and outside applicants.

2805. SCIENTIFIC ASSOCIATE POSITION - Requires a BS degree in psychology or equivalent social science. Work will involve human reliability analysis and require both qualitative and quantitative skills. Using standard scientific techniques, will perform specific and limited portions of a research or development project of an experimental, analytical or theoretical nature. Familiarity with personal computers is desirable. Department of Nuclear Energy.

Motor Vehicles & Supplies

VW PARTS - rebuilt cyl. heads, new Weber carb., assorted studs, $100 takes all. Fred, Ext. 4407 or 4435.

73 PORSCHE - 914 motor, 68k mi. Ext. 4496 or 878-1584 eves.

84 BUICK SKYHAWK - 4 cyl., a/t, a/c, p/s, p/b, am/fm cass., sunroof, new brakes, good tires, excel. in/out. Joan, 331-9264.

82 DATSUN 200SX - 5 speed, a/c, loaded, 99k mi., excel. cond., asking $2,600. John, Ext. 7770 or 4480.

86 CHEVY CELEBRITY EUROSPORT - wagon, V6, a/t, p/s, p/b. 399-0828.

ROOF-TOP CARRIERS - 2, new, $10/each. Ext. 2679.

77 CADILLAC SEDAN DEVILLE - white w/red leather int., excel. cond., new tires, $2,300. Jim, Ext. 4040 or 289-0876.

80 PLYMOUTH HORIZON - s/t, good cond., 70k mi., $1,000. 286-3209 after 6 p.m.

80 TOYOTA COROLLA - very good mech. cond., good transportation, $800. 821-2877 after 6 p.m.

81 OLDS OMEGA - -p/s, p/b, a/c, new brakes, $1,100. Ext. 7795 or 589-8331.

84 PONTIAC FIERO - white, mint cond., every option, 4 speed, sporty, 25k mi., $5,800 neg. 751-4997.

81 RELIANT STATION WAGON - clean, needs brakes, 58k mi., asking $750. 475-2334 after 6 p.m.

79 COUGAR XR7 - fully option equipped. Ext. 2760 or 281-5752.

85 HONDA ACCORD LX - 5 speed, a/c, p/s, p/b, am/fm cass., cruise, $6,800. 472-4684 eves.

83 FORD FAIRMONT - 4 dr., 6 cyl., good cond., 70k mi. Ext. 7121 or 277-9417 after 7 p.m.

81 DODGE OMNI - $1,500; 78 Chevy Monza, needs minor work, $350. 874-3796.

80 AMC SPIRIT - p/s, p/b, a/c, am/fm, new brakes, good cond., $800. Jackie, Ext. 2884 or 744-1786 after 6 p.m.

86 HONDA GYRO SCOOTER - 35 mph, electric start, red/black, 441 mi., windshield, basket, helmet, cover, $650. 589-4407 eves.

72 CADILLAC - clean in & out. John, Ext. 4987.

84 CHEVETTE - 4 speed, new clutch & tires, 49k mi., $2,400. 467-0334.

81 JEEP WAGONEER LTD - tan/wood, V8, 4wd, 4 dr., full power, a/c, sunroof, $6,500. 475-3407.

23 MODEL-T ROADSTER - restored to original, excel. cond., $6,500. Dick, Ext. 3499 or 589-9103.

80 HONDA ACCORD - 2 dr., 5 speed, 71k mi., excel. cond., $1,300. 744-6668 after 6 p.m.

77 DATSUN B-210 PARTS - $50. Larry, Ext. 7128 or 281-3640.

68 CAMARO PARTS - doors, truck int., more. Steve, Ext. 2310 or 929-6877.

TIRES - 4, P195-70-R14, Bridgestone radials on Toyota Celica-styled steel wheels w/trim rings & lugs. $115. Ext. 5211.

80 DATSUN 510 SEDAN - 5 speed, a/c, tape, hatchback, 70k mi. 924-6724.

TRUCK TIRES - 2, Uniroyal land-trac, 10-15LT, on Ford 5-lug rims, good cond., $50 neg. Ext. 3499.

74 BUICK SKYLARK - needs work, $300 neg. 399-0537 eves.

77 MERCURY MARQUIS - 122k mi., $300; 2 Michelin radials, 215-75R/15, 2 steel snows, 225-75R/15, $50/pair. Sam, Ext. 4023 or 929-3721.

77 PLYMOUTH VALIANT - runs well, many new parts, $500. Susanna, Ext. 3959.

83 BUICK REGAL - a/c, p/s, am/fm, beige landau top, excel. cond., $5,800 neg. Ext. 2964.

76 CHEVROLET PICKUP - 1 ton, completely restored, new fenders & doors, no rust, new paint, $3,900. 981-2480.

80 FORD F150 PICKUP - 6 cyl., p/s, p/b, am/fm stereo, clean, $1,900. 737-2558 eves.

85 Z-28 - T-tops, cruise, a/c, am/fm cass., clean, 27k mi., good cond. 286-0230, 10 a.m.-6 p.m.

86 AUDI 5000 - loaded, 7k mi., mint cond., $17,000. 744-1194.

84 VW RABBIT - 4 dr., sunroof, asking $2,500; 73 Plymouth, 4 dr., vinyl roof, cream puff, 77k orig. mi. 286-2093.

BRIDGESTONE TIRES - 4, 205/75-R14, used 200 miles, $100. 732-8837.

82 CHEVETTE - body damage, many excel. parts, 45k mi., best offer over $300. Dave, Ext. 3093 or 281-0062.

86 HONDA ACCORD LXI - 4 dr., 28k mi. Frank, Ext. 2314 or 567-5131.

87 TOYOTA SUPRA - black, sunroof, fully loaded, a/t, mint cond. 287-3121.

84 FORD MUSTANG - am/fm tape, p/s, p/l, a/c, sunroof, alum. wheels, 61k mi., excel. cond., $6,200. Ext. 4846 or 363-6940.

77 PLYMOUTH ARROW - 2000cc engine, a/t, moonroof, make offer. Ext. 2011.

CAR-TOP CARRIERS - 2, new, $10/each. Ext. 2672 or 472-6922.

Boats & Marine Supplies

22' SEAFARER SAILBOAT - 1974, 3 sails, Volvo outboard, full keel, asking $4,000. Fred, Ext. 4407/4435 or 499-1214.

22' MARATHON WEEKENDER - 1986, 170 h.p. Mercruiser, Shoreline trailer, stand-up head, full galley, extras, $16,500. Ext. 3341 or 981-9474.

Miscellaneous

DINING ROOM TABLE - w/2 leaves, 5 pieces, Colonial, excel. cond., $250. Gary, 929-6031 after 5 p.m.

SHOP LIGHTS - 2, new, w/fluorescent bulbs, $18 for both. Ext. 5053.

BEDROOM SET - 1950's, blond veneers, full headboard, night table, dresser, highboy, vanity, $350. Ext. 4262.

MANTIS TILLER CULTIVATOR - like new, used 4 times, w/border edger, $199. 286-3235.

TICKETS - Frank Zappa & Hot Tuna, March 25, Nassau Coliseum, 14th row, $50. Toni, Ext. 5257.

VITAMASTER TREADMILL EXERCISER - heavy-duty, adjustable, you pick-up, orig. $350, sell for $100 firm. Ext. 2198 or 744-4662.

SEARS COUNTER-CRAFT BLENDER - 14 spd., new, $20; Counter-craft food prep. center, 7 spd., juicer, ice crusher, more, new, $150. 589-4407.

LIVING ROOM SET - sofa & loveseat, very good cond., $350. 751-5868 eves.

STEREO TAPE DECK - Wollensak, 7" reel-to-reel, $50. Al, Ext. 5128.

MOVING SALE - tables, chairs, beds, china, closet, lamps, dishes, reasonable. 286-9685.

KITCHEN TABLE - w/2 leaves, 4 chairs. 325-0447 after 6 p.m.

LOVESEAT COUCH - beige, good cond., $800 neg. Ext. 2964.

FIREPLACE - free standing, black, open front w/screen, $75. Bert, Ext. 2050.

BEDROOM SET - Colonial, pine, headboard, 2 nightstands, triple dresser w/mirror, 5-drawer dresser, $275. Ext. 3341 or 981-9474.

FUR JACKET - mouton lamb, fits size 14, excel. cond., $65. 475-1826 after 6 p.m.

BEDROOM SET - boy's, solid wood, dresser w/mirror, headboard w/frame, night table, $125. Ext. 2888 or 286-0422.

AUTOMOTIVE/MACHINE SHOP TOOLS - jacks, stands, compressor, bench mill, tooling, lathe, reasonable. Bill or Joe, 281-5988.

TRESTLE TABLE - heavy, pine, w/4 chairs. Margaret, 288-9086.

COUCH - & loveseat, Colonial, w/chair, excel. cond., must see, $500. 589-0643.

DINING ROOM TABLE - large, round, not antique, $15; bureau, painted, 48"lx30"hx18"d, $15; sewerage hand-snake, $30; blender, $5. 878-6637.

HANG GLIDER - Quicksilver B, $250; styrofoam insulation, 2'x8'x2", $2.50 ea.; rowing machine/exercise gym, West Bend, $100. 286-1829.

ELECTRIC TRAINS - H-O Road Runners, new, $20; Royal manual typewriter, port., $25; Franklin stove w/brass trim, $75. 924-3082.

FURNITURE - 5-piece den set; Colonial hutch, $500; organ, $500; stereo, student desk. Ext. 2625 or 467-8297 eves.

SCREENS & STORM WINDOWS - wood, 14 each, good cond., $50. Cliff, Ext. 3794.

BEDROOM SET - Colonial, 2 nightstands, triple dresser, 5-drawer chest, mirror, headboard, $275. Ext. 3341 or 981-9474.

AKAI REEL-TO-REEL - very good cond., $150. 981-5993 after 5:30 p.m.

WALL MIRROR - old fashioned etched, gorgeous, excel. cond., $50. Ruth, 744-5077.

HOPPER FOR COAL STOVE - used once, asking $60. 689-9234.

COFFEE TABLE - glass top, asking $60. Ramesh, Ext. 4805 or 924-8113.

SKI BOOTS - man's size 10, Nordica rear-entry, used 3 times, $45. Richie, Ext. 2175 or 734-7342.

RCA COLOR TV - 19', good cond., $90 or best offer. Aoki, Ext. 3748 or 3176.

SANYO BETA VCR - remote control, programmable, mint cond., $125 neg. 281-1378 after 5 p.m.

PROJECTOR LENS - 102 mm, 4", Kodak, $10; Jockey undershirts, man's 42-44 large, V-neck, $3/each; Susan, Ext. 4267.

MEMBERSHIP FOR JACK LaLANNE - lifetime membership, good price. Ext. 7226.

WARING BLENDER - $5; 2-burner electric stove, $5; Puritron air-freshner, $5; Remington typewriter, very old, $20. 878-6637.

BABY ITEMS - high chair, $28; car seat, $32, both new. Javier, Ext. 2645 or 3136.

MOVING SALE - blender, $18; portable icebox, $12; camping stove, $18; typewriter, $15. Emilio, Ext. 3110 eves.

HAMS - packet radio, AEA PK-232, $150; PH-80, $75; TS-520, $200. Ext. 5144 or 744-9677.

HYDRO-PNEUMATIC PUMP - glass lined, 80 gallon tank, domestic water, good cond., $50. Bob, 732-9517.

BLINDS - roll-up, white plastic, bamboo-like, (1) 120" wide, (1) 72" wide, make offer. Janet, Ext. 2345 or 929-3910.

IBM PC - color, Hayes modem w/Smartcom II, 256k, two 360k floppies, microspooler, mouse, $800. Elaine, Ext. 5329.

LINCOLN WELDER - portable, gas, 2 cyl., 225 amps, like new, $1,500; assorted hand tools. John, 884-3228.

SEARS GENERATOR - portable, 1,350 watts, excel. cond., $300. Joe, Ext. 2898.

Car Pool

BOHEMIA/OAKDALE - needs 2 drivers for car pool. Frank, Ext. 2314.

Real Estate

Real Estate advertised for sale or rent is available without regard for the race, color, creed, sex or national origin of the applicant.

For Rent

HILTON HEAD, SC - 2 bdrm. condo, sleeps 6, beach, pool, golf, tennis, Feb. & March, $320/wk. Ext. 3147 or 585-9149.

EAST SETAUKET - 3 bdrm. hi-ranch, l/r, d/r, 1½ baths, economical coal stove, patio, in-ground pool, avail. immed., $925/mo. + util. Ext. 3791 or 928-7154.

NESCONSET - studio apt., l/r-bdrm. combo, ¾ bath, eik, private ent., non-smoker, no pets, $475/mo. + sec. Ext. 5264 or 361-6326 after 6 p.m.

RIDGE - 3 bdrm. house, bsmt., garage, attractive, 5 min to Lab, $800 + util. George, Ext. 2615.

STONY BROOK - north of 25A, 1 bdrm. apt., mature, single, non-smoker, no pets, immed. occup., $500/all. 751-0178.

SMITHTOWN PINES - studio apt., lovely, private, full bath, eik, a/c, cable, $525/all. Ext. 2830 or 543-0487.

For Sale

WINDHAM, NY - ski chalet, 3 large bdrms., sleeps 10, 2 baths, fp, all appliances. 744-9746 eves.

PALM COAST, FL - ¼ acre, Greenbelt, approx. 3-5 miles to ocean, 24 miles to Daytona, water & sewer util., $3,995 & take over payments, $142/mo. over 8 yrs. Tom Nolan, Ext. 5265 or 7160.

SETAUKET - north of 25A, hilltop setting, private, 3 bdrm. ranch, 2 baths, open l/r, den w/fp, 2 car garage, patio, beautiful landscaping, $229,000. Ext. 7560 or 689-7494.

YAPHANK - 2 bdrm. townhouse, 1½ baths, bsmt., garage, w/w, cedar f/p, patio, 5 appliances, large closets, 3 years old, 3 pools, clubhouse, tennis, $132,000. Ext. 7760.

PORT JEFFERSON - Harbor Hills, 3 bdrm. ranch, 3 baths, wooded golf course setting, balcony, deck, patio, 2-car garage, 3-zone gas heat, $259,900. Ext. 3791 or 928-7154 eves.

STONY BROOK - north of 25A, in village, private, 4 bdrm. Colonial, large eik, new appliances, den w/fp, full bsmt., 2-car garage, deck, $275,000. 751-3442 after 6 p.m. & wknds.

MOUNT SINAI - north of 25A, 3-4 bdrms., 2 baths, l/r, d/r, eik, prof. landscaped, sprinklers, covered patio, garage, den w/fp, a/c units, ⅓+ acre, excel. schools, near beaches, $169,000. Ext. 2494.

MANORVILLE - 3 bdrm. ranch, 1½ baths, 1-car garage, 1+ acre, cul-de-sac, excel. neighborhood, immed. occup., $145,000. Ext. 5400 or 878-6098.

MILLER PLACE - north of 25A, 3 bdrm. custom ranch, entertainment area, l/r, family rm., custom f/p, 24'x26' 2-car garage, finished bsmt., more, $225,000. Ext. 3353 or 473-5786.

MASTIC BEACH - expandable 1 bdrm. ranch, city water, bsmt., large property, excel. cond., $78,500. 281-8040.

PORT JEFFERSON - Harbor Hills, 4 bdrm. split ranch, d/r, eik, family room w/fp, brick patio, winter waterview, excel. cond., $199,000. Ext. 4474 or 473-3689.

RIVERHEAD - mobile home in adult park on Peconic River, 2 bdrms., 1½ baths, new carpeting & floors, new bath, $39,000. 369-2838.

HILTON HEAD, SC - 3 bdrm. condo, sleeps 8, 2 baths, washer/dryer, wet bar, 6 tennis courts, 3 pools, whirlpool, golf, ocean view, asking $89,000 or will rent. 929-8912.

Wanted

ALUMINUM "JOHN" BOAT - approx. 4'x12', light, complete, good cond. Cliff, Ext. 3794.

HOUSE TO RENT - 3 bdrm., in SWR school district, for BNL physicist w/family. Ext. 2707 or 3009.

BASEBALL CARDS - any condition. Ext. 3541 or 924-4070.

APARTMENT - responsible woman seeks clean, separate apt. in private home, North Shore preferred. Ronni, Ext. 3389.

INFANT CARE - mature person to care for young infant, starting Sept.-Oct. Ruth, Ext. 4013 or 281-5076 eves.

WEIGHTS - for working out. 472-3985 after 9 p.m. & wknds.

TRAINS - Lionel, American Flyer, accessories, any cond., bring good price. Carole, Ext. 7100 or 924-4097 eves.

BOY'S BEDROOM SET - excel. quality and condition only. 744-9677.

BABYSITTER - mature, experienced woman to sit 7 mo. old infant, Monday-Friday, 8 .am.-1 p.m. 588-1233 after 2 p.m.

ROOMMATE - to share 2 bdrm. house in Sound Beach, $350/mo. + ½ util. 473-6294.

MINERALS - mineral collections, mineral books. Plotkin, Ext. 7974 or 798-2887 on Wednesdays.

WEIGHT BENCH - good quality, reasonable price. Elaine, Ext. 5329.

PARTICIPANTS - to start a wildlife club. Lou Graziano, Ext. 4639 or Joe Buscemi, Ext. 4638.

CASSETTE TAPES - 30-minute, good quality. Ext. 4308.

HORSEBACK RIDER - to share board Thoroughbred horse, indoor arena. Pat, 744-8512 eves.

Services

Services are listed as a courtesy to BNL employees. They are neither screened nor recommended by the ***Bulletin.***

TAXES PREPARED - by tax consultant, your home or mine, reasonable. Bea, Ext. 3642 or John, 732-2472.

SHEETROCKING & SPACKLING - free estimate. Kevin, 874-2386.

3T'S PLUMBING & HEATING - complete boiler/water heater installations, free estimates, licensed & insured. 821-3495.

BRICKWORK - patios, walks, swimming pools, Belgian block, landscape ties, 20-years' experience, Lab discount. Tony, 698-9274.

RUG SHAMPOOING - clean for spring, very reasonable, Lab discount. 924-6019, leave message.

CALLIGRAPHY - for all occasions, envelopes, invitations, place cards, etc. Andrea, 821-0260.

JEWELRY REPAIR - gold and silver, rings, chains, etc. Dan, Ext. 2319.

SPACKLING - free estimate, excel. work. John, 281-3342 after 6 p.m.

ENGLISH TUTOR - as a second language, flexible hours. Joe, Ext. 7160 or 924-2205.

CHILDCARE - my home in Farmingville, county-certified. 732-9324 after 6 p.m.

TYPING - on IBM PC using WordPerfect software. 286-3604 or 654-0830.

WORD PROCESSING - papers, letters, etc., quality work, reasonable rates, 12 years' experience. 924-2012 after 6 p.m.

HEATING & PLUMBING - no job too large or small. Julie, 698-6652.

TAX PREPARATION - computerized, professional accountant, Lab discount. Pete Medolia, Ext. 2498.

TAX CONSULTANT - your home or mine. Maurice, Ext. 2487 or 928-6930.

ELECTROLYSIS - permanent hair removal, physician-trained, licensed, free consultation, eyebrow shaping by appointment. 331-4768.

GENERAL CONTRACTOR - home improve., dormers, extensions, kitchen & bath alterations, design service, licensed & insured. 475-6981.

ROOFER - repairs and new roofs, insured, free estimates, guarantee. 732-4679.

TROYBILT ROTOTILLING - custom work, garden & lawn. Bob, 732-9517.

LANDSCAPING - ponds, Oriental gardens. 369-2531.

Ads left out of this issue due to lack of space need not be re-submitted to appear in the next issue.