BROOKHAVEN BULLETIN
Vol. 48 - No. 11 March 18, 1994
BROOKHAVEN NATIONAL LABORATORY

The PHENIX Has Risen: Second Major RHIC Experiment Approved

Following a successful two-day review of the cost and schedule proposed for the Pioneering High Energy Nuclear Interaction Experiment, the detector known for short as PHENIX was approved on March 10 as the second major experiment for BNL's Relativistic Heavy Ion Collider (RHIC).

In the search for quark-gluon plasma at RHIC, PHENIX will be competing with STAR, which is short for the Solenoidal Tracker at RHIC and which was approved in January 1993. Despite nearly a year's lead time for STAR, both detectors are expected to be ready to "do RHIC physics on the day the machine turns on in 1999," says Thomas Ludlam, RHIC Associate Head for Detectors & Experiments.

"By the nature of the physics we will be investigating, our detector is very complex, but we now understand how to build it within budget and on time," comments Shoji Nagamiya, PHENIX Spokesman and a professor of physics at Columbia University.

In giving its approval to PHENIX, "The Technical Advisory Committee [TAC] was quite satisfied that all the budget, scheduling and management questions that were raised last November have been answered," continues Ludlam, who convenes this committee. "This review has allowed us to get the most physics for our dollar, and, in the process, the physics has been strengthened."

After PHENIX's conceptual design report was approved last February by the RHIC Program Advisory Committee, which answers to BNL's Associate Director for High Energy & Nuclear Physics, Mel Schwartz, the collaboration presented its first cost and schedule estimate to Ludlam's TAC last November. At that time, however, the committee gave the experimenters five more months to reduce the cost of their detector by $4.5 million.

"Instead of turning off any of the major subsystems, we tightened everything, especially the electronics and data-acquisition system," comments Sam Aronson, PHENIX Project Director, Physics Department. "While we won't be able to install as much of the detector as we had initially hoped, we will still be able to handle all the physics that RHIC can deliver from day one until the machine reaches its design intensity. To go beyond that, as is expected, we will have to find some additional funds to install the deferred components."

While some $36.7 million is now available from RHIC construction funds to build PHENIX, the actual cost of the detector is approximately $70 million. To cover the other half of the bill, PHENIX management enlisted collaborators from Japan, Russia, Germany and elsewhere in the U.S., who are contributing money, building components at discounted prices, and/or bringing already constructed parts from other experiments. Invitations to join PHENIX are being discussed with other Europeans and Japanese

(continued on page 2)

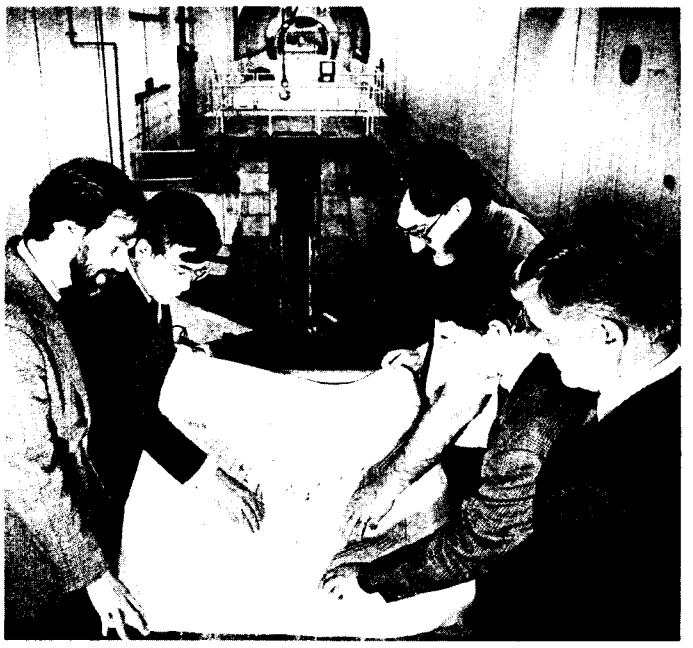

Within the 8 o'clock experimental hall in which the second major RHIC detecter will be housed, the PHENIX management surveys the plans for the Pioneering High Energy Nuclear Interaction Experiment: from left Walter Kehoe, Assistant to the Project Manager, RHIC; Shoji Nagamiya, PHENIX Spokesman, Columbia University; Glenn Young, Deputy Project Director, Oak Ridge National Laboratory; Sam Aronson, Project Director, Physics Department; and Leo Paffrath, Project Engineer, RHIC. They report to the PHENIX Detector Council, which is made up of 12 heads of the detector's major subsystems, which is chaired by Aronson and meets every month or two. In addition, the entire collaboration gathers twice a year to review its progress, with the next meeting scheduled for this August at BNL.

Photos in this issue by Roger Stoutenburgh

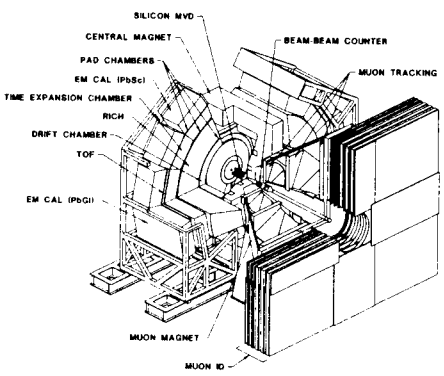

Schematic of PHENIX, showing the major detector subsystems. The central arms are dominated by a 9.5-meter high, 450-metric ton (500-ton) magnet and include many detectors for particle identification and tracking. Located closest to the interaction point are the inner detectors: two arrays of beam-beam counters, which will place and time events; and a silicon multiplicity vertex detector (MVD), which will locate and count charged particles. They are followed by: a drift chamber, which determines transverse momentum; a ring-imaging Cerenkov detector (RICH), which identifies electrons; pad chambers, which tracks particle paths; a time-expansion chamber, which tracks and identifies electrons; time-of-flight (TOF) detectors, which identify hadrons; and an electromagnetic (EM) calorimeter, which is used to identify photons and electrons. PHENIX also has a muon arm containing a 10.5-meter, 360-metric ton (400-ton) magnet and, after additional funds are obtained, a muon tracker and identifier.

Coming Up

Chemist F. Sherwood Rowland, of the University of California, Irvine, will give an AUI Distinguished Lecture on Tuesday, March 29. His talk on "The Depletion of Stratospheric Ozone by Chlorofluorocarbons" will be held at 4:30 p.m. in Berkner Hall.

Tenure for Three Brookhaven Researchers

At its January 19-20 meeting, the Board of Trustees of Associated Universities, Inc., (AUI) awarded tenure to three BNL scientists. So on April 1, the trio will be added to the Lab's existing roster of 163 tenured scientists.

"It is always a pleasure to welcome outstanding individuals to the tenure ranks," said BNL Director Nicholas Samios. "This change in status is in recognition of both their past accomplishments and their future promise."

BNL's Scientific Staff Manual explains that tenure appointments recognize "independent accomplishments of a high order in the performance of original research or of other intellectually creative activity appropriate to the purpose of the Laboratory." The AUI Board acts in accordance with this policy by granting tenure to researchers who have come through a cycle of term appointments.

This year's newly tenured scientists are the following:

• **Lonny Berman**, Physicist, National Synchrotron Light Source (NSLS) Department, has spent much of his BNL career designing, developing and improving beam line X25, which has the highest intensity in the world for a synchrotron beam in the 5-to-20-kiloelectron-volt (keV) range.

Berman's high resolution, x-ray scattering wiggler beam line relies on high heat-load optic-cooling approaches and monochromators that he has developed, and both advances have brought him recognition as a contributor to the field of synchrotron science. Berman's work is expected to be a direct benefit to third generation synchrotron radiation facilities.

In addition, he has used the instrumentation advances at X25 to perform standing-wave x-ray examination of surfaces, investigating perovskites, and he has studied the photoelectron yield response to x-ray standing waves. The beam line itself has been used for research into coherent diffraction, surface phase transitions, magnetism, spectroscopy and thin films.

• Chemist **Louis DiMauro**, Chemistry Department, specializes in the response of atoms and molecules to strong radiation fields produced by lasers. His work combines theory and state-of-the-art experimentation.

He was among the first to investigate above-threshold ionization in multielectron elements other than the rare gases, including calcium and magnesium, and he has continued that work by probing particular aspects of high-field interactions in certain elements, such as very high order above-threshold ionization in xenon. He has also examined the effects of strong field dissociation on molecules such as H_2 and Cl_2.

DiMauro also develops the lasers he uses in his experimental work, including a very high repetition rate laser that enables researchers to observe photoelectrons with unprecedented sensitivity. Recently, he has been closely involved with the free electron laser facility planned for BNL's National Synchrotron Light Source.

• **Graham Smith**, a physicist in the Instrumentation Division, is responsible for the division's research and development (R&D) and construction of position-sensitive detectors for x-rays, mostly used at synchrotron radiation facilities. He is also a key contributor to the detector R&D program for high energy, relativistic heavy-ion and neutron physics.

Smith has significantly advanced state-of-the-art detector technology. Several of his proportional chamber detectors have achieved the world's highest position resolution to date.

His insight into basic phenomena led to instrumentation that has brought new capabilities to the experimental programs at BNL's National Synchrotron Light Source. One example is a two-dimensional high count-rate detector made for the time-resolved x-ray diffraction program at beam line X12B, which is furthering progress in time-dependent studies of biological processes and polymer reaction kinetics. Another is a one-dimensional detector that has helped X7A become a premier beam line in the world for powder diffraction studies.

BNL's new tenure appointments for 1994: (from left) Louis DiMauro, Lonny Berman and Graham Smith.

A Visit With Science's Future

As 20 local high school junior and senior girls and their teachers listen, M. Sue Davis, BNL's Associate Director for Reactor, Safety and Security, discusses the public's perceptions of scientists versus the reality of being a scientist, during BNL's Women in Science and Engineering Day.

The students, selected by each of 10 local schools for their excellence in math and science, were at BNL on March 11, for tours and discussions about the lives and careers of the BNL women scientists who volunteered to be their mentors for the day. Meanwhile, their teachers heard from Karl Swyler, BNL Office of Educational Programs, and Wendy Katkin, State University of New York at Stony Brook, about resources for encouraging girls to pursue scientific careers. The university also has offered a $1,000 scholarship for its Women in Science and Education Program to each of the girls who decide to attend Stony Brook.

Art Meets Physics in Berkner Lobby

Six acrylic paintings that have been lent to the Lab by artist Matts Roos of Finland are now on display in Berkner Hall lobby.

Roos's work will be especially interesting to many BNLers, not only because he is an artist who has had one-man shows in Vienna, Helsinki and Geneva, and even on Finnish television; but also because he is a professor of particle physics at the University of Helsinki.

While describing his paintings as abstract expressionism, Roos wrote in 1992, "I often use elements from physics: curves, mathematical formulae, signs, diagrams — typical blackboard scribbling." However, he explained, "These elements are neither meant to be symbolic nor an exact representation of mathematics of physics. . . . There is meaning to it, . . . but still it is enigmatic."

Roos has also shown pictures in various group shows, including one at CERN, the European particle physics laboratory. Last December was his first showing in the United States, at the Frank Bustamante Gallery in Soho, New York City. These six paintings come from that show.

To mark the paintings' arrival, Associated Universities, Inc., will hold a reception on Tuesday, April 5, at 5 p.m. in Berkner lobby. All are invited.

Hanging the six paintings loaned to BNL by Finnish artist and particle physicist Matts Roos are Robert Chrien (front), Chairman of the BERA Art Society, and committee member Mark Walker. Most other art on view in Berkner lobby is by Art Society founder Gertrude Quastler, whose works are included in the Museum of Modern Art and the Library of Congress, among 12 other permanent collections.

Healthline Lecture

Fats, Cholesterol & Weight Control

It has been found that the intake of fat is related to both blood cholesterol levels and to weight. So, by decreasing fat intake and eliminating saturated fats from one's diet, a person may be able to have the best of both worlds — lowered total blood cholesterol and reduced body weight.

To present the latest results from research in this field, physician Ashok Vaswani will talk about "Fats, Cholesterol and Weight Control — A Medical Update." Sponsored by the Health Promotion Program (HPP) of the Occupational Medicine Clinic, the talk will take place on Monday, March 21, from noon to 1 p.m. in Berkner Hall.

A BNL research collaborator in the Medical Department, Ashok Vaswani, M.D., is Director of Medical Research and Associate Director of the Division of Endocrinology & Metabolism at Winthrop-University Hospital in Mineola. Board-certified in internal medicine, nutrition, endocrinology and metabolism, A consulting editor for the *Journal of the American College of Nutrition*, Vaswani has published widely in the field of nutrition, obesity, body composition and osteoporosis.

To register, return the bottom portion of the Heathline flyer recently sent to all employees to Health Promotion Specialist Mary Wood, Bldg. 490, by the end of the day today. For more information, call Ext. 5923.

PHENIX (cont'd)

researchers, as well as scientists in China and India.

According to legend, the phenix was a mythical bird, which flew about the desert for 500 years before burning itself to death on a funeral pyre, only to rise again from among the ashes to live another 500 years. Reminiscent of its namesake, the PHENIX experiment arose from three experiments that were conceived before it: OASIS, TALES/SPARC and a dimuon spectrometer.

In August 1991, when STAR was given a conditional approval, the RHIC Program Advisory Committee asked the collaborations proposing the three to consolidate into one detector, due to RHIC budget constraints. That detector became PHENIX.

With combined forces, PHENIX became the largest RHIC collaboration, so far involving 376 people, 45 institutions and 10 countries. As eclectic as they are, "We tried to accommodate the physics objectives of each of the previous experiments," explains Nagamiya.

Despite past allegiances, "I am pleased that we forged new alliances within our group and learned to work well together as a team toward a common goal," comments Aronson.

Same Goal, Different Approach

The goal of both PHENIX and STAR is to detect and measure the properties of a new phase of matter called the quark-gluon plasma, a high-density and high-temperature state of nuclear matter that is expected to arise in the high-energy collisions of heavy ions within RHIC. It is believed that this state will be very similar to the conditions that have not occurred since shortly after the Big Bang, the birth of the universe.

Said Nagamiya, "Our interest is threefold: Nuclear physicists want to know if nucleons melt into a soup of quarks and gluons, elementary particle theorists want to know if quark confinement can disappear, and astrophysicists want to know what actually happened in the early universe."

In specific combinations of three, quarks make up the nucleons called protons and neutrons, which, in varying numbers, are the constituents of every atomic nucleus. Because of the nature of the force holding quarks together, they are confined within nucleons, and, thus, cannot individually be found free. As their name implies, gluons are the particles that bind quarks together.

Physics theory, however, indicates that there may be another kind of matter, in which quarks combine in larger numbers than found within protons and neutrons of ordinary nuclei. Freed from the confines of the individual nucleons, quarks would then circulate within a volume extended beyond the size of a nucleon to roughly the size of a nucleus, thus forming quark-gluon plasma.

It is thought that this plasma will then expand and cool, resulting in the formation of quark-containing particles called hadrons.

"At RHIC, most of the many thousands of particles that will be detected are the hadrons produced at the surface of the interaction," explains Ludlam. "Information from the interior of expanding volume will be carried to the outside world by photons and leptons, specifically electrons and muons, which will be much less abundant than the hadrons."

Signed, Sealed & Delivered

Given the nature of physics at RHIC, each collaboration is taking opposite approaches to detecting quark-gluon plasma: While STAR will focus on the hadrons through a general event-by-event analysis, PHENIX will look, along with hadrons, for photons and leptons, to reveal the specific "signatures" expected of quark-gluon plasma.

After each collision, "We will be looking at 300 to 500 particles, while STAR will be looking at 2,000," says Nagamiya. "Our approach is to attain very good particle identification for a limited number of particles, to probe the signatures." PHENIX will be able to conclude that quark-gluon plasma was formed when, if more than one signature is found, they are seen simultaneously.

Signature information will be gathered throughout the detector by 11 specialized particle-measuring and identifying devices arranged around two large magnets (see schematic on page 1).

"Obviously, from my participation in this experiment, I think that PHENIX is the right way to go, but I also think that PHENIX and STAR are taking very complementary approaches," says Aronson, "and, to see quark-gluon plasma or other new physics, it will take data from both experiments to make believers out of most physicists."

"The hope is that, when we turn on RHIC, we'll see great things from both PHENIX and STAR," concludes Ludlam. — Marsha Belford

Art Auction Tomorrow Night

The works of dozens of artists will be sold at an auction in Berkner Hall tomorrow, Saturday, March 19, to be run by Marlin Art Inc., of Deer Park, to benefit Brookhaven Women in Science's Renate W. Chasman Scholarship Fund.

The artworks will be available for inspection beginning at 7:30 p.m., and the auction will start at 8:30 p.m. The $5 admission fee includes wine and cheese. Purchase tickets at the door, or in advance from: Eva Emmerich, Bldg. 911, Ext 4758; Rae Greenberg, Bldg. 510, Ext. 5564; Terri Lacker, Bldg. 750, Ext. 2112; Stephanie LaMontagne, Bldg. 1005, Ext. 7141; Ruth Ann Lutz, Bldg. 460, Ext. 7774; Harriet Martin, Bldg. 77, Ext. 3484; and Mary Wood, Bldg. 490, Ext. 5923.

Recycle the Red Book

Now that the new blue 1994 phone directories are out, you may recycle the '93 book in your mixed-paper recycling bin. If you haven't got a bin, contact your division's recycling coordinator.

A Few to Talk About FEW

Last summer, 22 BNL women attended the 25th annual National Training Program sponsored by Federally Employed Women (FEW). Shown above are a few of the FEW attendees — a few of whom will share their program experiences and insights next week, as panelists at a joint meeting of Brookhaven Women in Science and the Upton Chapter of Professional Secretaries International.

On Thursday, March 24, at noon, in the dining room of the Brookhaven Center, the panelists will recall their participation in a conference that involved over 5,000 women and offered over 150 workshops. All are invited to attend. Coffee and tea will be provided, but please bring your lunch.

Photographed after returning from the workshop last August were: (left, front to back) Lynn Kalbach, Safety & Environmental Protection (SEP) Division; Grace Nubla, Department of Advanced Technology (DAT); Judy Fanizza, DAT; Lisa Toler, DAT; Alexsandra Lopez, DAT; Maria Wagner, SEP; (right, front to back) Patti Bender, Plant Engineering (PE) Division; Barbara Royce, SEP; Ronnie Evans, Computing & Communications Division; April Donegain, Fiscal Division; Marilyn Pandorf, Personnel Division; (center, front to back), Nicole Bernholc, SEP; and Sandi Sullivan, DAT.

Other program participants were: Vanessa Crump, DAT; Nanci Hoey, Office of Equal Opportunity (OEO); Frances Ligon, OEO; Sue Monteleone, DAT; Flo O'Brien, DAT; Susan Perino, PE; Barbara Pringle, Division of Contracts & Procurement; Michelle Rabatin, DAT; and Nancy Schneider, DAT.

Note to Employees:

Attendance at lectures, meetings and other special programs held during normal working hours is subject to supervisory concurrence.

BROOKHAVEN BULLETIN

Published weekly
by the Public Affairs Office
for the employees of
BROOKHAVEN NATIONAL LABORATORY

ANITA COHEN, Editor
MARSHA BELFORD, Assistant Editor

Bldg. 134, P.O. Box 5000
Upton NY 11973-5000
Tel. (516) 282-2345; Fax (516) 282-3368

Four Running for Four Years on BERA Board

Study the biographies below carefully. Two of these four BNLers will soon represent you and all other BNL, AUI, DOE and other permanent on-site employees on the board of the Brookhaven Employees Recreation Association (BERA).

Their terms will begin May 1 and last four years, during which time they'll have the opportunity to affect recreation policies and decisions for all.

To choose which two they will be, eligible voters may cast their ballots from March 28 to April 1 at the times and locations listed below, or bring absentee votes to the Recreation Office, Bldg. 185, before March 28.

Date	Time	Place
Mon., Mar. 28	11:30 a.m.-1:30 p.m.	Berkner Hall
Tue., Mar. 29	11:30 a.m.-1:30 p.m.	Berkner Hall
Wed., Mar. 30	11:30 a.m.-1:30 p.m.	Berkner Hall
Thu., Mar. 31	10:00 a.m.-2:00 p.m.	Credit Union
Fri., Apr. 1	10:00 a.m.-2:00 p.m.	Credit Union

Kathi Barkigia

Kathi Barkigia, a chemist in the Department of Applied Science, joined the Lab in 1978. Within a few years, she became involved with BERA sports, joining the Softball, Bowling and Volleyball Leagues, and also serving on the BERA Nominating Committee. During her 12 years as a volleyball enthusiast, she played at different levels, refereed, organized tournaments and an awards dinner, and served for two years as treasurer, a year as vice president and about six years as president.

Barkigia says, "I'm interested in being on the BERA Board because I think I have some fresh ideas, and I've had experience in organization. I've noticed that some club memberships are declining, and I believe we could promote more participation in different ways, for example by running a lunchtime fair to show the variety of clubs one can join.

"Also," Barkigia added, "I have some funding ideas, perhaps involving adult-education programs in various activities. I would like to see BERA work for all employees."

Luis Nieves

Luis Nieves, a service foreman for Fujitsu Business Communication Systems, which provides the telephone service on site, has been working at the Lab for 13 years — since 1981. As soon as he came, he joined the Softball, Volleyball and Football Leagues, and he has been a keen participant in all of these sports ever since. He captained the Renegades volleyball team for five years, and now plays with the Silver Bullets in League 3.

"I've appreciated the great choice of activities and facilities BERA offers, and I'd like to help others get to know what's available to suit them," said Nieves. "I like to keep in shape and meet other employees at the same time, and the clubs I joined make this possible.

"In my job," Nieves continued, "I get to see many people, but you get to know them in a more friendly way in a club. But it takes time and organization to promote club membership, which is hard for some of the smaller clubs. I think BERA Board members could be useful in these situations and help with funding ideas."

Susan Norton

Susan Norton, a design supervisor with the Collider Ring Division of the Relativistic Heavy Ion Collider Project, has participated in and served as an officer of many BERA organizations over her 18 years at BNL. Now, she wants to get involved on a larger scale.

A softball diehard for almost all of her time at the Lab, Norton is currently serving as the Softball League's treasurer. Additionally, she has been president of the Aviation Club, and is currently the treasurer of the Racquetball Club and vice president of the White Water Rafting Club.

Norton's initial interest in the BERA Board came from handling the budget for three of the clubs. "I became interested in where BERA's money comes from and how it is distributed," she explained.

Norton would like to see more of that money used for safety equipment for such activities as softball, in which, she said, the league has dipped into its treasury to buy breakaway bases. "The more competitive you are," she explained, "the more safety is an issue."

Edward Sperry IV

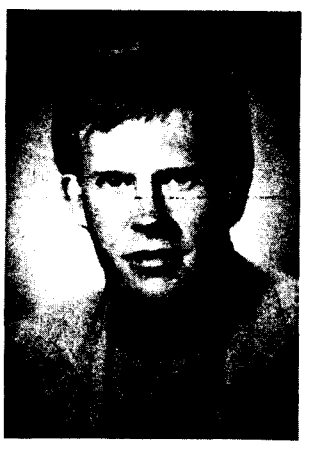

Edward Sperry IV, a technical specialist with the Relativistic Heavy Ion Collider Project, has participated in BERA activities since he first came to BNL 15 years ago and joined the Bowling League, for which he has since completed eight years as president. He's also become the captain of The Source softball team, participated in the Golf League and taken BERA trips to Atlantic City and the U.S. Open tennis tournament.

"Since I'm so involved in BERA activities, it would be interesting to learn more about its policies. I'd like to make my impact, on BERA operations," Sperry said, mentioning the gymnasium weight room as a possible target of improvement. "Fitness is pretty important to BNLers, and it would be nice to see a bigger area so more people can use it," he continued.

Sperry said he would also like to see more cultural and social events geared toward a broad portion of the BNL community, including country, jazz and rock concerts, and dances and Labwide casual parties.

Let's Dance!

Tonight's the Night

Come to the North Ballroom of the Brookhaven Center after work today to celebrate the end of the work week tonight — at the monthly informal TGIF Social sponsored by the BNL Ballroom, Latin & Swing Dance Club.

From 5:30 to 11 p.m., all are invited to swing, cha-cha, etc. to selections from Ralph Izzo's 300-CD collection of dance music. Food and beverages are available at the Center Club.

The suggested donation is $1 per person. For more information, contact Brenda Riddle, social chairperson, Ext. 4524; or co-chair John Millener, Ext. 3853.

Roll Out the Barrel

Up to 15 more beginners are invited to sign up for the BNL Dance Club's lindy and polka class, which starts on Wednesday, March 23, 6:30-7:30 p.m., in the North Ballroom of the Brookhaven Center.

BNL employees, retirees and those employed by on-site contractors, plus their spouses, dance partners, family and friends are welcome — especially men. Since even numbers of men and women will be enrolled, you don't need a partner to sign up.

The cost per person is $20 for the series. To register, call Marsha Belford, club president, Ext. 5053, or show up at the first lesson.

ANS Meeting

John Williams, Executive Director of the New York State Low-Level Radioactive Waste Siting Commission, will speak on "Low-Level Radioactive Waste Disposal: The Status in New York and the Nation," at a dinner meeting of the Long Island Section of the American Nuclear Society (ANS), on Wednesday, March 23, at the Radisson Hotel, Islandia. Following cocktails at 6 p.m. and dinner at 7 p.m., the speaker will be introduced at 8 p.m. by Robert McNair of BNL's Reactor Division. For reservations, call Julie Teuber, Ext. 2513, by March 21.

Payroll Deposit Options Increased

Until now, BNL employees have had the option of having their weekly or monthly net pay deposited in the bank account of their choice. Effective immediately, however, that option is expanded: Employees can now choose to have their net pay deposited to two different accounts, in either the same or different financial institutions.

To take advantage of this new option, obtain the appropriate form from the Payroll Office, Bldg. 134, Ext. 2470.

Skin Cancer Screening

Up to 40 employees may be screened for skin cancer at the Occupational Medicine Clinic on Thursday, March 31, by appointment, between 9 a.m. and noon. To register, send your name, building number and extension to Health Promotion Specialist Mary Wood, Bldg. 490, Ext. 5923. You will receive a confirmation by mail.

P-CAD Users

The P-CAD Users Group will next meet on Thursday, March 24, from 10 a.m. to noon, in the Computing & Communications Division seminar room, Bldg. 515.

Topics of discussion will include P-CAD release 7.0. For more information, call Pam Mansfield, Ext. 7286 or E-mail pam1@bnl.gov.

Arrivals & Departures

Arrivals

Wolfgang A. Caliebe ..... NSLS
Michael J. Syphers ..... AGS

Departures

This list includes all employees who have terminated from the Lab, including retirees:

Yuyi Guo ..... Physics

Bowling

Red/Green League

R. Mackinnon bowled a 264/257/697 scratch series, R. Prwivo 235, H. Arnesen 233/602 scratch, R. Mulderig 232, R. Wiseman 224, E. Beadle 215/200/601 scratch, R. Larsen 207/207/200/614 scratch, E. Larsen 203, A. Pinelli 203, C. Bohnenblusch 202, A. Warkentien 202.

Purple League

Ben Belligan bowled a 220, Bob MacKinnon 215, Fred Schaefer 211, Peter Stelmaschuk 209, Pat Bounauito 192, Linda Farmer 182, Debbie Keating 181, Mary Addessi 176, Maria Yanez 175.

White League

Tom Romano bowled a 236, Pete Wynkoop 217, Kevin Carney 212, Joe Mayeski 200, Diane Fisher 187, Mary Picinich 186/176, Pat Manzella 172 and converted the 6/7/10 split.

Grumman Tournament

3rd round: K. Asselta 257/224, R. Mulderig 224/209/2045/243, R. Larsen 201, H. Arnesen 203/202.

4th and final round: K. Asselta 236, R. Mulderig 216/202, R. Larsen 235.

BNL finished in 6th place.

Basketball

Games of March 10

Runaways 96		Deep Six 37	
Wayne Cummings	23	Neil Tyler	9
Ed Meier	19	Tracy Fountaine	7
Charlie Edwards	18	Dwayne Eleazer	5
Pete Ratzke	13	Brian Hobson	5
Jerry Gaeta	12	Tony McGill	5
Gerry Shepherd	7	Darren Harris	2
Chris Saxen	4	Charles Kirkland	2
		Ulysses Tapley	2

Three-point shots: Cummings (2), Eleazer, Fountaine, Hobson, McGill

Magic 84		Scram 76	
Troy Mayo	32	John Duggan	19
Terrence Buck	16	Tim Powers	18
Raymond Jackson	12	Steve Nappi	16
Patrick Browne	11	Al Boerner	8
Mitch Williams	11	Ken Johnson	6
James Rank	2	Victor Cassella	5
		Alan Jones	4

Three-point shots: Powers (3), Mayo (2), Nappi, Williams

Standings as of March 10

Magic	5-0	Deep Six	1-4
Runaways	4-1	Knicks	0-4
Scram	2-3		

Cafeteria Menu

Monday, March 21

Soup: Vegetable & rice chowder	.80/1.10
A la Carte: Monterey pork chops	3.75
Fitness: Vegetable lasagna	3.35
Deli: Roast lamb w/rosemary sauce	2.95
Grill: Reuben	2.95
Salad: Marinated green beans	

Tuesday, March 22

Soup: Minestrone w/sausages & pasta	.80/1.10
A la Carte: California chicken	3.65
Fitness: Tomato & scallion quiche	3.35
Deli: Roast beef au jus	2.95
Grill: Spanish omelet	2.35
Salad: Seafood chef's	

Wednesday, March 23

Soup: Beef & vegetable w/rice	.80/1.10
A la Carte: Sausage & pepper calzone	3.45
Fitness: Beef w/peppers, onions & rice	3.85
Deli: Virginia ham	2.95
Grill: Italian cheesesteak	2.95
Salad: Fresh fruit	

Thursday, March 24

Soup: Italian escarole w/chicken	.80/1.10
A la Carte: Oven-crisp chicken	3.45
Fitness: Pasta primavera	3.35
Deli: Corned beef sandwich	2.95
Grill: Monte Cristo platter	2.95
Salad: Cantaloupe	

Friday, March 25

Soup: New England clam chowder	.80/1.10
A la Carte: Display cooking, chicken scampi	4.55
Fitness: Baked sole w/remoulade sauce	3.45
Deli: Roast turkey sandwich	2.95
Grill: Fried clam boat	3.25
Salad: Grilled chicken platter	

Deli, Burger and other specials daily.

Leisure Travel Celebrates One Year

On Tuesday, March 22, between 10 a.m. and 2 p.m., stop by Berkner Hall to join the celebration of the Omega Leisure Travel Office's first year at the Lab. In addition to sampling lots of good travel information and advice about the hottest leisure destinations, sample some goodies!

For more information, contact Omega Leisure Travel representative Kerri Fitzpatrick, Ext. 5918 or 5958.

Volleyball

Standings as of March 9

Open League		League I	
GTEAM	43-20	Rude Dogs	53-10
Me and the Boys	38-22	Upfagrabs	43-23
The Roofing Co.	38-25	Network News	35-28
Far Side	28-32	Underdogs	21-45
Penetrating Vollies	6-54	Fornossing	10-56
League 2		**League 3***	
Safe Sets	43-8	Jolly Vollies	36-15
Net Wits	33-18	Silver Bullets	35-16
Monday Night Live	33-18	Take Five	33-18
Nuts & Bolts	32-19	Slow Hands	25-26
Fossils	28-23	High Volley'em	15-36
Spiked Punch	18-33	Upton Ups	9-42
Night Court	13-38		
NTTP	4-47		

*As of March 2

Classified Advertisements

Placement Notices

The Laboratory's placement policy is to select the best-qualified candidate for an available position. Consideration is given to candidates in the following order: (1) present employees within the department/division and/or appropriate bargaining unit, with preference for those within the immediate work group; (2) present employees within the Laboratory; and (3) outside applicants. In keeping with the Affirmative Action plan, selections are made without regard to age, race, color, religion, national origin, sex, handicap or veteran status.

Each week, the Personnel Division lists new placement notices. The purpose of these listings is, first, to give employees an opportunity to request consideration for themselves through Personnel, and second, for general recruiting under open recruitment. Because of the priority policy stated above, each listing does not necessarily represent an opportunity for all people.

Except when operational needs require otherwise, positions will be open for one week after publication.

For more information, contact the Employment Manager, Ext. 2882, or call the JOBLINE, Ext. 7744 (282-7744), for a complete listing of all openings.

LABORATORY RECRUITMENT - Opportunities for Laboratory employees.

DD 0797. SECRETARIAL POSITION - Requires an AAS in secretarial science or equivalent experience, and a thorough knowledge of Laboratory policies and procedures, as well as excellent oral and written communication skills. IPAP travel and WordPerfect 5.1 experience essential. Will provide varied secretarial support to the Department Chairman's office, such as arranging travel, coordinating meetings and maintaining confidential files. Medical Department.

OPEN RECRUITMENT - Opportunities for Laboratory employees and outside candidates.

LS 5541. COMPUTING ANALYST POSITION - Requires a BSCS or equivalent with experience in UNIX, shell and C, and the ability to comprehend mathematical and scientific issues arising in the research process. Experience in motif tool-kit programming, C++ and client-server systems is desirable. Responsibilities include providing system-administration support for Silicon Graphics or other UNIX systems in a distributed-computing environment. Computing & Communications Division.

DD 0916. MIS PROGRAMMING/ANALYST POSITION - Requires BS in a relevant field. MS preferred, excellent programming skills, excellent communication skills, and heavy accounting experience. Experience in the implementation of enterprise-wide accounting systems desired. Responsibilities will include the development and programming of new accounting and budget-reporting system. Management Information Systems Division.

DD 2481. PROGRAMMING POSITIONS - (term appointment) Requires bachelor's degree in computer science, or other appropriate field, and programming experience in Speedware, Powerhouse or COBOL. A background in finance or procurement is very desirable. Management Information Systems Division.

NS 2855. ADMINISTRATIVE POSITION - (term appointment) Requires BS in engineering or equivalent, with a comprehensive business background and a good command of the Russian language. Experience in engineering, logistics and contracts is necessary. As the U.S. coordinator/liaison working in the Moscow Office with Russian engineers, responsibilities will include maintaining contact and communications with the Project Office and nuclear power plants; receiving, sending and coordinating project information; and coordinating in-country activities on behalf of the Office. Department of Advanced Technology.

NS 2753. CONSTRUCTION SUPPORT SUPERVISOR - Requires prior experience and knowledge within construction trades, with an emphasis on architectural and asbestos abatement preferred. In addition, a working knowledge of general construction practices and formal OSHA training are required. Will be responsible for supervision and administration of contract labor, task order and lump sum contracts in a variety of construction trades which support construction, improvements and modifications to buildings and grounds. Will determine work schedules/distribution, staffing requirements, and maintain time records for contract labor and task order personnel. Plant Engineering Division.

The Brookhaven Bulletin is printed on paper containing at least 50 percent recycled materials, with 10 percent post-consumer waste.

Motor Vehicles & Supplies

92 TOYOTA PASEO - red, ac, p/s, p/b, sunroof, am/fm cass., 5-spd., 28k mi., orig. owner, ask. $9,500. 254-6180 or 584-5765.

91 HONDA CIVIC - 3-dr. h/b, gray, 5-spd., ac, am/fm cass., p/b, 24k mi., ext. warr., gar., like new, $6,500. Vinny, Ext. 4706.

90 NISSAN PICKUP - & '89 Rockwood pop-up camper, ask. $11,500; '86 Nissan pickup, low mi., needs muffler pipe, ask. $4,000. Scotty, Ext. 3457 or 698-5701.

90 NISSAN SENTRA XE - 62k mi., ac, am/fm cass., good cond., $5,000. Akiba, Ext. 3891/1061.

88 ISUZU TROOPER II - 4wd, 68k mi., am/fm stereo cass., cruise, ac, 5-spd., excel. cond., $7,300. Donna, 924-5062.

87 PONTIAC FIREBIRD - red, 2.8L V-6, 72k mi., $3,500. 924-6790.

86 OLDSMOBILE - 2-dr., 2-tone blue, spike wheels, 4-cyl., runs well, ask. $1,295. Ext. 7187 or 722-3938.

86 CHEVY MONTE CARLO - Super Sport, red, T-top, new brakes, tires, $5,500; '85 Ford Ranger 4x4 pickup, new tires. Pete, Ext. 5105 or 737-9614 after 6 p.m.

85 HONDA NIGHTHAWK 450 - new rear tire, mint cond., must see, $1,300. Neal, 286-2435.

85 OLDSMOBILE CALAIS - blue, $1,000. Ext. 1229.

84 FORD VAN E150 - 4.9L eng., 3-spd., o.d. tranny, needs eng. work, $700 neg.; Toyota 1AC eng., rebit. comp., fits Tercel, no hrs., $250 neg. Bill, 281-6498.

84 HONDA PRELUDE - needs front body work, otherwise in good cond., $450. 864-1798.

84 AUDI 4000S - 4-dr., fully powered, sunroof, am/fm cass., 140k mi., runs well, looks good, $1,800. Al, 878-2577.

83 SUBARU GL WAGON - 5-spd., 120k mi., runs but needs work. Steve, Ext. 5323 or 744-3902.

83 TOYOTA TERCEL - 70k mi., 2-dr. h/b, red, 5-spd., ac, good cond., reliable, $1,200. Detlef, Ext. 7024.

81 GMC CIERA TRUCK - 2500 series, 4wd, $10,000 invested, moving, $5,500 neg. Kris, 581-8438.

81 BUICK REGAL - 350 engine, brand-new muffler & cat. converter, runs, station car, $650 neg. Becky, 325-2751.

79 PONTIAC BONNEVILLE - V-8, gray, 2-dr., a/t, ac, p/b, p/w, p/s, 150k mi., $500. Detlef, Ext. 7024.

78 MERCURY COUGAR - $500. Rich, Ext. 3499 or 435-4316 after 7 p.m.

77 SHASTA CAMPER - self-contained, sleeps 6, 19' long, roll out awning, Reese hitch, $2,000. Dan, Ext. 4220/5377.

76 VW VAN - well-maintained, $900. Dirk, 924-9292.

TOYOTA SR5 4X4 PICKUP - extra cab, new engine, rebuilt trans. in 8/92, new tires, runs well, reliable, $4,200. Larry, Ext. 3499.

HITCH - factory GM Class III hitch, fits '88-'94 full-size GMC/Chevy pickup, new, $75. Jim, Ext. 4026.

CAP - for full-size pickup, 8' bed, $129. Frank D. Ext. 2022 or 399-4480.

TRAILER HITCH - new, fits Fords, $100. Rich, Ext. 3499.

PARTS - from '78 Ford LTD, 390 Ford heads new, Mustang & Ford truck parts, cheap. Wayne, Ext. 7238.

Boats & Marine Supplies

23' 4 WINNS - 1986, 230-h.p. Merc i/o, many extras, excel. cond., trailer optional, $8,900. Charlie, Ext. 2407.

21' 4 WINNS - 1986, cuddy, i/o, many new parts, w/'90 trailer, full canvas, $8,800. Ken V., Ext. 2012.

OUTBOARD - Yamaha, 1984, 50-h.p., p/tilt on engine VRO tank, spare propeller, controls incl., good cond., $750. Bill, Ext. 7136.

Furnishings & Appliances

BED - metal frame, casters, foam mattress, 4"x34"x74", new cond., $50. Rau, Ext. 3864.

BEDROOM SET - girl's, white, wood, desk w/hutch & chair, dresser w/mirror, headboard, $150; china closet, walnut, w/4 chairs, $75. Doug, Ext. 4661.

COUCH - green, 42"W, mint cond., $350, 2 yrs. old; small stereo, $50; end table, $25; slipcovered chair, $50. 584-7672.

DINING ROOM TABLE - pine, 2 leaves, no chairs, buffet, breakfront, $150; 42" round glass table, $50; sofa, $50. Betty, 725-3709.

DINING ROOM TABLE - light oak, 2 leaves, 6 chairs, breakfront w/mirrored back & glass shelves, table pad, like new, $950. 368-6115.

GAS RANGE - 30", green, bottled gas, oven, good cond., asking $50. 924-6751.

REFRIGERATOR - apt. size, asking $100; dining room table, white Formica w/leaf, 6 green swivel chairs, $250. Don, Ext. 7237 or 744-2921 after 5:30 p.m.

REFRIGERATOR - Whirlpool, frost-free, 16.3 cu. ft., efficient, works well, asking $200. Paul, Ext. 7507.

ROCKING CHAIR - natural wood finish, excel.. cond., $200. Donna, Ext. 2716.

TABLE - early American, pine, 40"x48", 2 leaves, 5 chairs, 50"W breakfront, $400/all. Norman, Ext. 4446.

TABLE - pine, 72", 2 leaves, pine hutch, needs repair, $100/both; Tappan oven, self-cleaning, 30" range, black w/cast-iron burners, $300. Peter, 821-5142.

WASHER - Maytag, full-size, w/converter to make portable, 1 yr. old, $200. Mike, Ext. 5972 or 4421.

WATERBED - queen, pedestal w/4 drawers, mirrored headboard w/bookshelf, $150. Bob, 878-0042.

Tools, House & Garden

LAWN MOWER - Black & Decker, 18", push, $50. Don, Ext. 7237 or 744-2921 after 5:30 p.m.

POOL PUMP - ¾-h.p., s/s 25-gallon tank, excel. cond., $30. Bill, 281-6498.

TOOLS - hot-air heater, $50; exec. metal desk chair, $100; 3-drawer file cabinet, $30; power table saw, King, $75; more. 589-3487 after 6 p.m.

TREES - spruce & Douglas fir, b&b, sheared, 4-6', $25-$45/ea., depending on quantity, excel. for privacy. Tom, Ext. 4507 or 878-1060.

Sports, Hobbies & Pets

AQUARIUM - 35-gal., cast-iron stand, fluorescent lights, all access., $75. Stephen, Ext. 4477 or 924-5510 eves.

BACKPACK - Northface, large, internal frame, used twice, excel. cond., $75. Rau, ext. 3864.

BIKES - two, 20", red, $20/ea.; 12" w/training wheels, pink, girl's, $20; girl's trike, $10; boy's, 16", gray, $10. Don, 821-3320.

CAMERA - Kodak, pocket, $5. Pete, Ext. 2800.

CROSS COUNTRY SKIS - $20; horseshoe set, $20; record player, $20; rocking chair, $20; antique rocking chair, $200. Kathy, 744-2203.

DIRT BIKE - '87 Suzuki, 50cc, excel. cond., $650. Tom, 369-2414.

DIVING VEST - Dacor, $100. Ext. 2769.

GLOCKENSPIELS - 2, parading, good cond. 472-1302.

ORGAN - Kawai, electronic, barely used, asking $1,000. Doreen, 758-6892.

PIANO - Kawai concert grand, 9'4", black lacquer, excel. cond., $15,000 neg. John, Ext. 7340.

PIANO - Roland EP-5, digital, like new, authentic grand piano sound, built-in sequencer, more, $350 or best offer. Alex, Ext. 7396 or 331-8436.

Audio, Video & Computer

CAMCORDER - Hitachi S-VHS, many features, like new, orig. $1,200, sell for $695. L. Arnold, Ext. 5462.

COMPUTER - Atari 1040 ST, w/color monitor, lots of software, excel. cond., $500 neg. 924-6790.

COMPUTER - Abest 286, 40 meg HD, 1 meg RAM, 3½" drive, two 5¼" drives, 14" monochrome mon., mouse, $500 or best offer. Cheryl, 732-7634.

KEYBOARD - Ensomar digital sampling, 16-bit sounds, 24-bit effects, 16-track sequencer. Jim, 878-6098.

RECORD PLAYERS - 2, one w/cabinet, $25 or best offer. Ext. 2683 or 751-2469.

SPEAKERS - AR-10 TT, rebuilt, sound great, good cond., asking $75/pair. Don, Ext. 7237 or 744-2921 after 5:30 p.m.

TYPEWRITER - Royal 370 Heritage, elec., port., orig. owner, good cond., $60; child's tricycle, 1-2-3, $15. O. Booker, Ext. 3082.

Miscellaneous

CAR SEAT - Century, good cond., $20. Akiba, Ext. 3891 or 1061.

NECKLACE - women's, 14k foxtail chain w/9 diamonds in chevron design, 1 ct. total diamond weight, asking $800. Ann, Ext. 5345.

TICKETS - 2, *Dialogues of the Carmelites*, 3/19, Met Opera, $22/ea.; Stas, Ext. 7849 or 821-0459 eves.

WATCH - women's, quartz, interchangeable leather straps & rings in 5 colors, almost new, $20. Ext. 2733 or 878-8491.

Free

BOAT - 23' Thunderbird, excel., cuddy cabin, f.g., no motor, no trailer, you haul away. 281-1832 eves.

Lost & Found

FOUND - communion remembrance pin, outside Director's Office. Joe, Ext. 5139.

FOUND - Medic Alert pendant on 11/9, outside Brookhaven Center. Dennis, Ext. 4218.

Car Pools

BOHEMIA/E. ISLIP/OAKDALE - looking for 1 or 2 drivers for existing car pool. Frank, Ext. 2314.

Wanted

AIRLINE TICKET - one-way LA to NY for use in April. 473-2473.

BABY-SITTER - German-speaking. Stas, Ext. 7849 or 821-0459 eves.

BABY-SITTER - part-time in my Calverton home, 3 days/wk., nonsmoker, mature, responsible, energetic person w/refs. 369-7809.

BASEBALL CARD - 1984 Dwight Gooden, Topps Rookie. Don, 821-3320.

BICYCLE - girl's 26", working order, good cond., reasonable. Joan, 924-5333, Ext. 296.

CAMPERS - interested in a discounted group rate for summer day camp, BNL employees only. Laura, 698-4143.

CAR BOYS - 5-gal., glass, used for beverages only, reasonable. John, Ext. 4491.

CEMENT MIXER - gas or electric, good cond., reasonable price. Jim, Ext. 4026 or 298-9748.

CONDO - to purchase, 3 bdrm. with w/d, and either bsmt., garage &/or storage area. Morris, Ext. 4192.

HOT TUB - used; used satellite dish. Jerry, 874-2588.

PEOPLE TO JOIN - French group, meeting last Monday in month. Joe, Ext. 2212.

POTTER'S WHEEL - electric or kick. Toni, 325-1907.

RADIO-CONTROLLED CAR - Matt, 878-6098.

SWIMMING POOL - used, reasonable or cheap, will dismantle and remove. Mike, Ext. 4028.

TANDEM BICYCLE - adult size in good cond., reasonable. Don, 821-3320.

TICKETS - four, Islanders vs. Rangers, 4/10/94. John, Ext. 4414.

TIME SHARE - in Aruba. John, Ext. 7340.

TOY TRUCKS - oil company promotion, Hess, Mobile, Texaco, etc., paying top $ for mint, in-box truck. Jim, 298-9748.

TRAINS - Lionel & American Flyer, priv. collection, pays top $. Ext. 7100 or 924-4097.

TUTOR - calculus for college student. John Ext. 2460 or 281-2471.

VIEWERS - to see 2-part video *St. John in Exile*, starring Dean Jones, in Snyder Conf. Rm., 911A, 3/22 & 29, noon. Frank, Ext. 2368, or Pete, Ext. 3297.

In Appreciation

Thank you to all my colleagues and friends for the sympathy and thoughtfulness upon the loss of my mother. — Stephen Springston & family

Ads left out of this issue due to lack of space need not be resubmitted to appear in the next issue.