# Magnet Designs & Status

Masahiro Okamura

September 19-20, 2007

# Overview of EBIS magnets

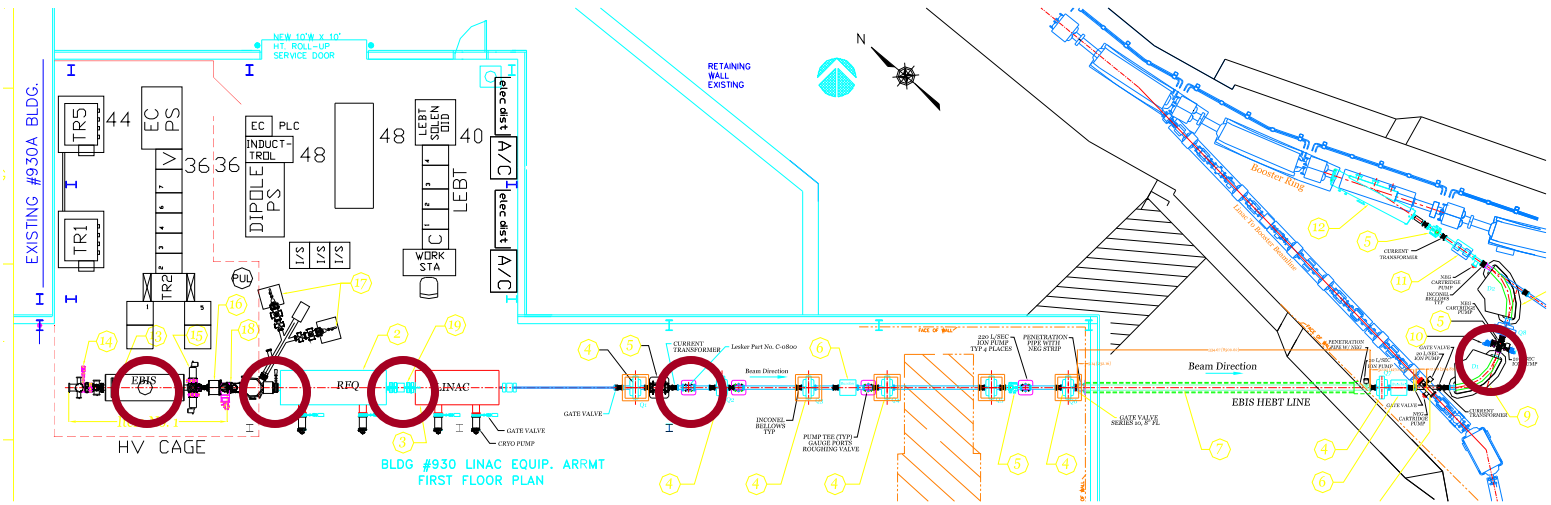


- 5 Hz operation for normal conducting lenses.
- 1 Hz operation for two dipole magnets.
- Wide range of field amplitude. From $H^+$ to $Au^{32+}$.
- Limited spaces.

# HEBT dipole magnets

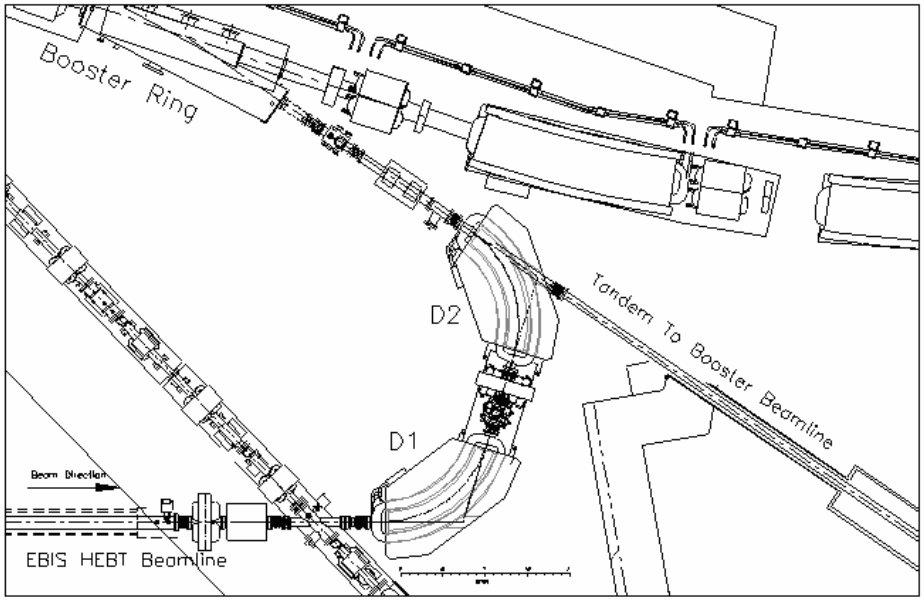


- Field changes within 1 second.
- Two identical dipole magnets.
- Enough good field region.
- Try to reduce the volume.

- Slit between two dipoles
  →need same beam optics from $H^+$ to $Au^{32+}$
- Hole on the side wall for beam from Tandem Van de Graaff.
- Large magnet with laminated iron.
- Large bending angle with small bending radius.

# HEBT Dipole Magnets

HEBT Dipole Development:

Physics design by BNL

May 2006

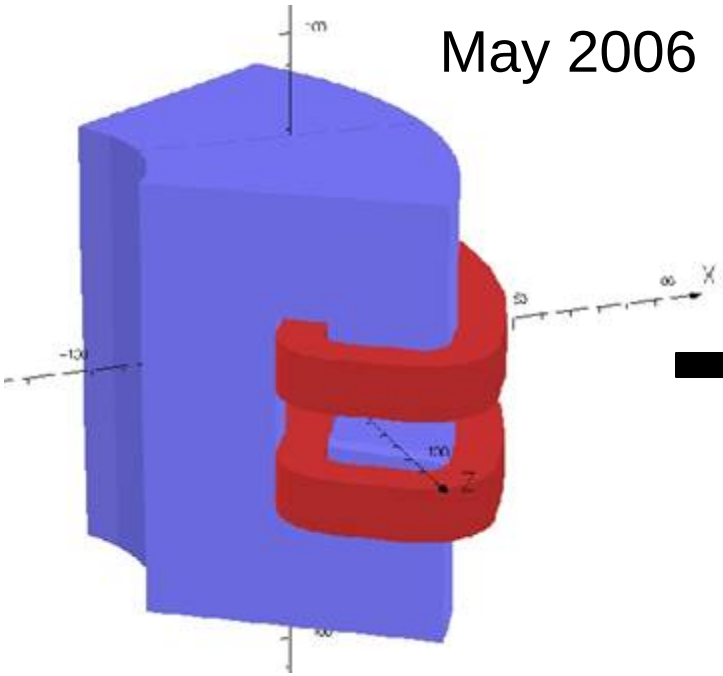

Current Design

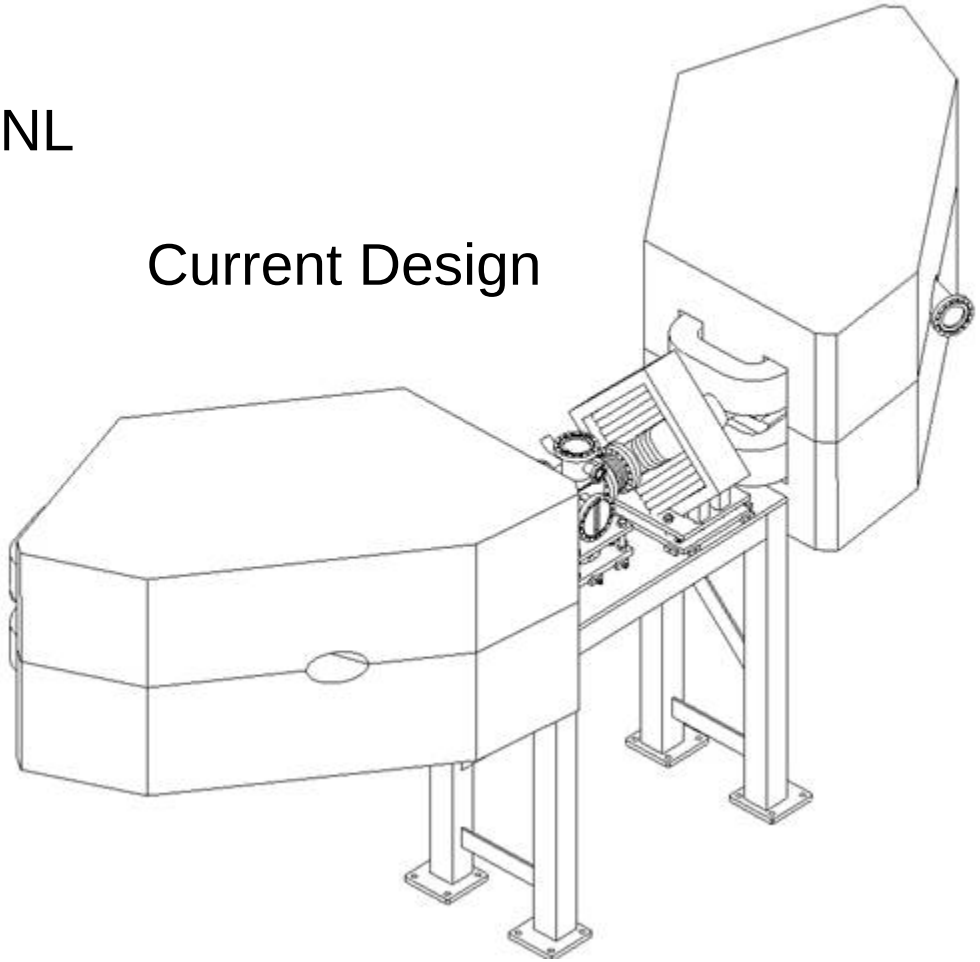

# HEBT dipole magnets

- Optimize dipole magnet to make the beam optics the same as possible for all ions from H+ to $Au^{32+}$

- Same effective length
- Same integral of multipole components along the reference orbit

| | |
|---|---|
| Gap height | 13.54 cm |
| Operating range | 0.157-0.964 T |
| Bend radius | 1.3 m |
| Bend angle | 72.5 degree |
| Useful aperture | 5.0 cm |
| Radius of hole on side wall | 6.35 cm |

# HEBT dipole magnets

Effect of the hole for the existing tandem beam line.

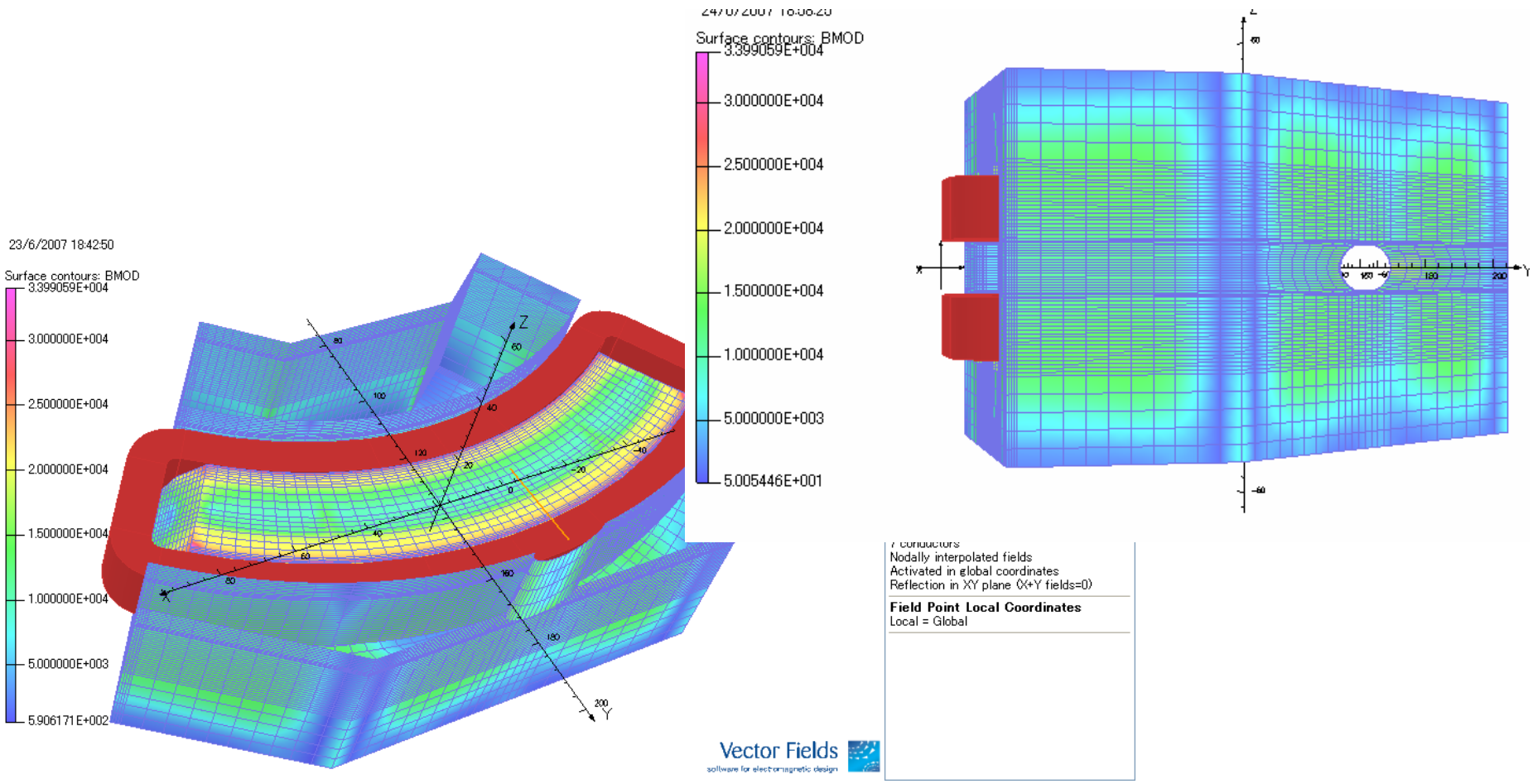

# HEBT dipole magnets

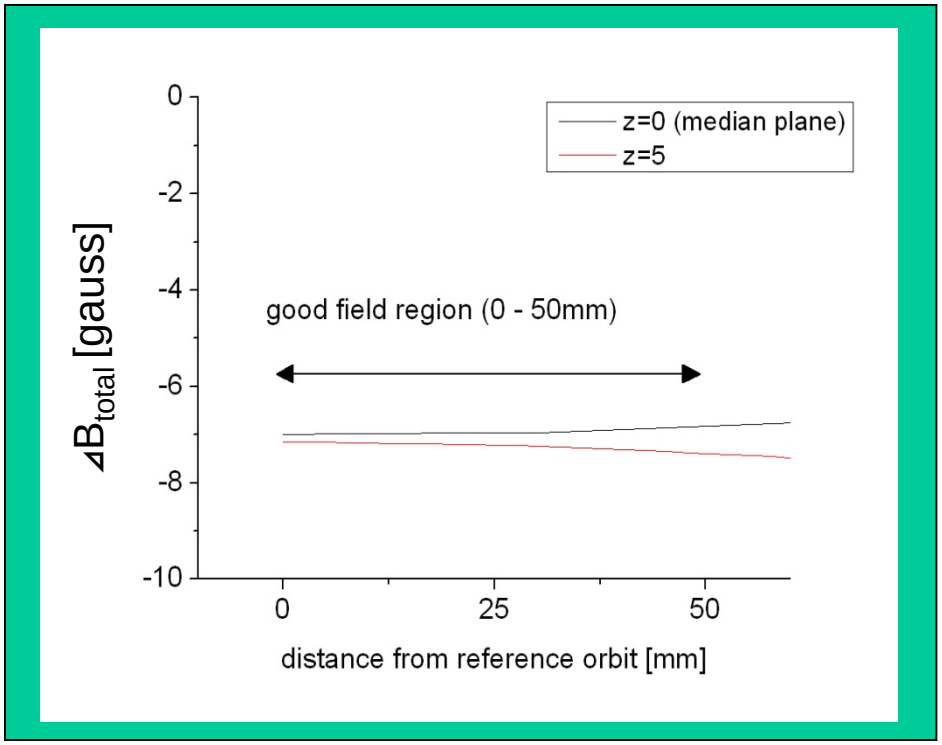


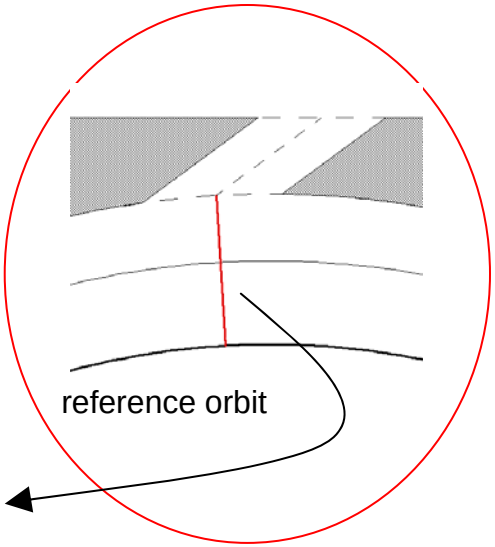


Top view of magnet median plane

- max. $\Delta B_{total}$ < 8 gauss (within good field region)
- $B_{total}$ at reference orbit in hole model: 9662 gauss

| | dipole [T*m] | quadrupole [unit] | sextupole [unit] |
|---|---|---|---|
| hole | 1.61 | 10.46 | -24.00 |
| No hole | 1.61 | 10.47 | -24.02 |
| $\Delta$ [unit] | | -0.01 | 0.02 |

# HEBT dipole magnets

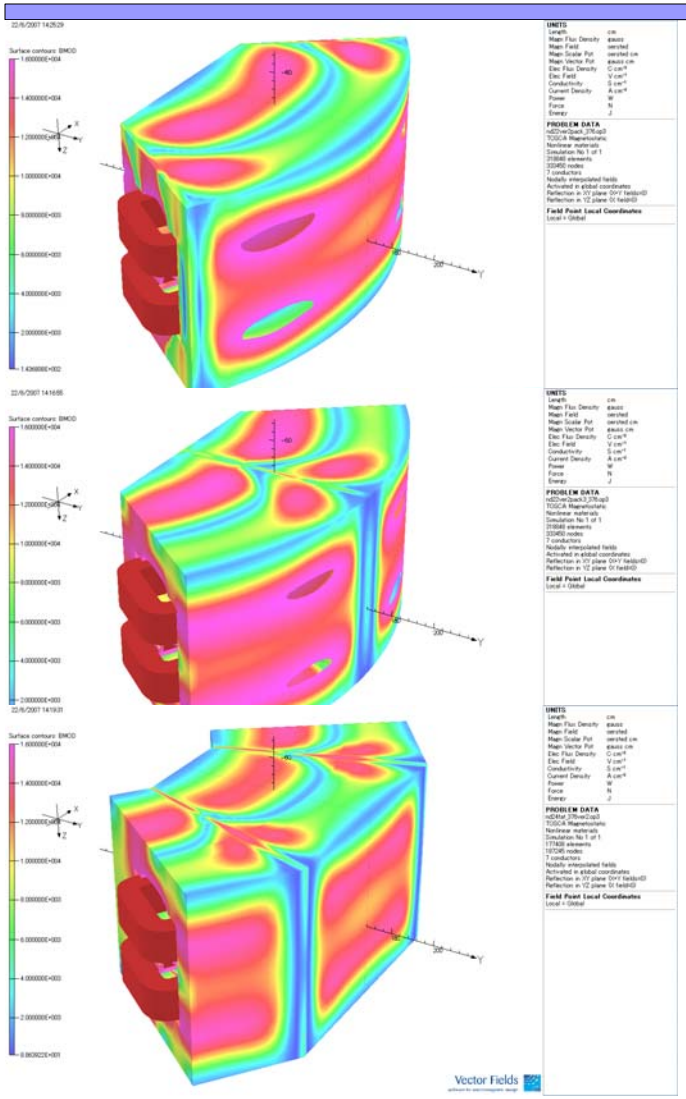


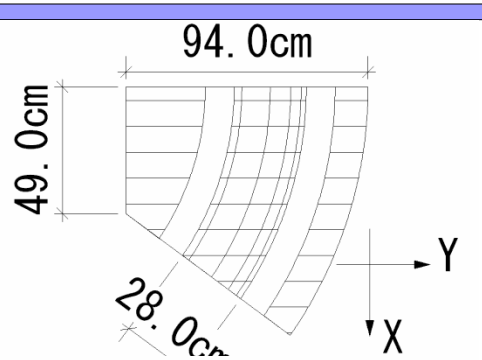


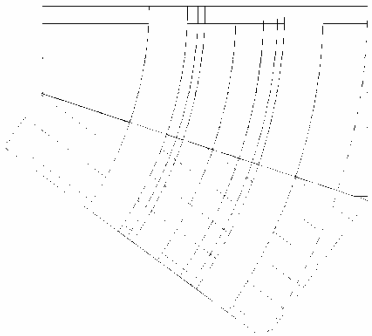

Lamination directions affect field and saturation.

# HEBT dipole magnets

Effective length vs. chamfer cutting

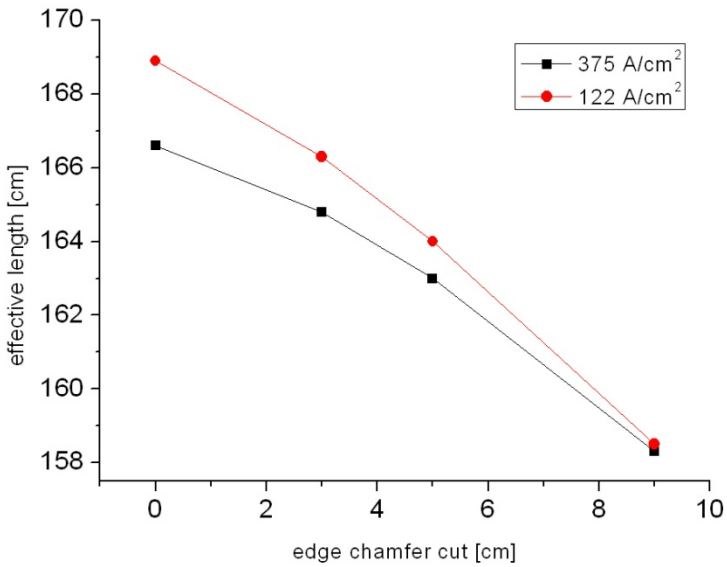


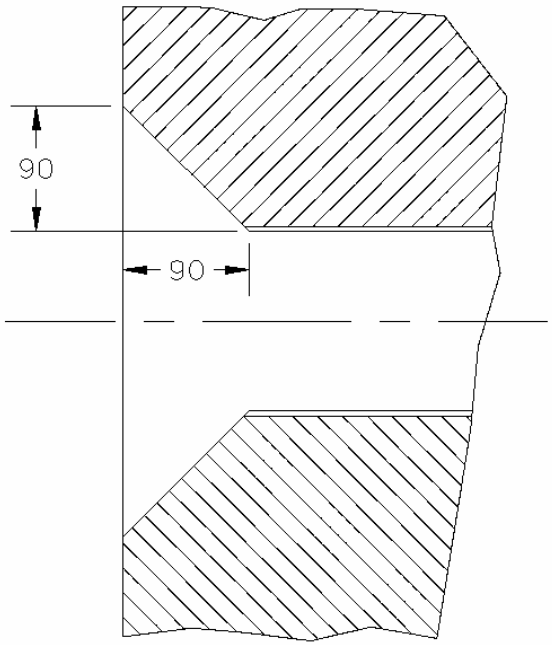


Optimized edge shape

- Effective length < 0.2 cm at 90mmx90mm

# HEBT dipole magnets

Small variations in the effective length and the multipole contents.

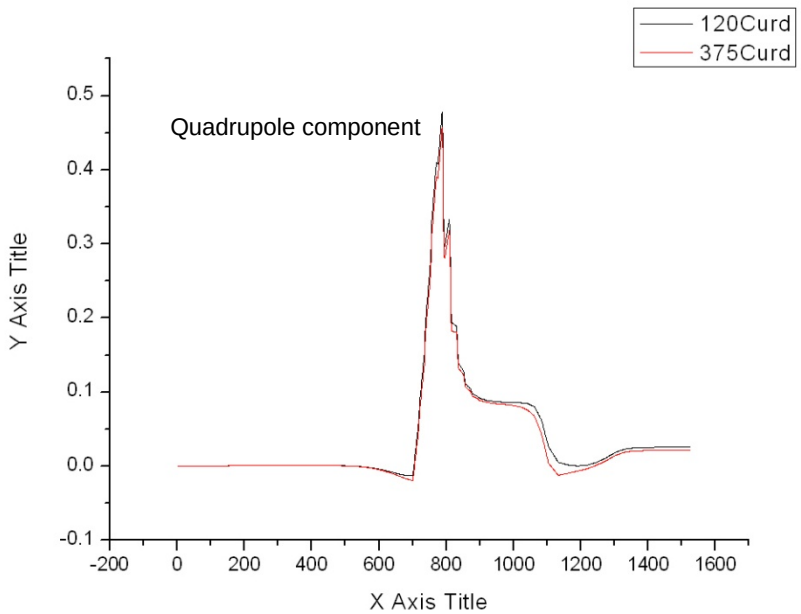


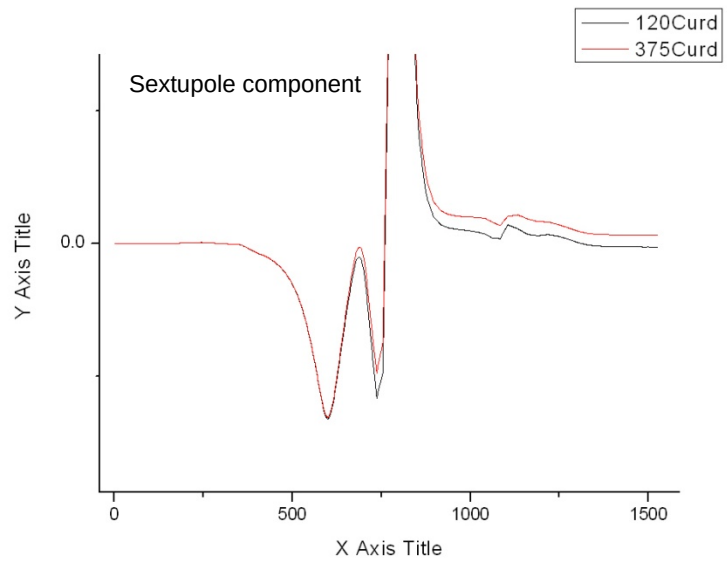


| Current density [A/cm$^2$] | Dipole [T*m] | Quadrupole [unit] | Sextupole [unit] | effective length [cm] |
|---|---|---|---|---|
| 120 | 0.53 | 12.58 | 17.44 | 166.77 |
| 375 | 1.63 | 9.34 | 29.74 | 166.52 |

# HEBT Dipole Magnets

Procurement Plan (manufacturing specification*):

| | |
|---|---|
| Specification/SOW | Completed |
| RFP | June 2007 |
| PO Date | September 2007 |
| Delivery | May 2008 (8 mo.) |
| Installation | Summer 2008 |

*Detailed configuration and manufacturing specification by BNL will shorten delivery

Present status: Vendor has been selected. Contract to be awarded soon. Cost exceeds baseline by $100 k (direct).

# LEBT solenoid

Completed in August 2007

Required field : 0.22 Tm

**3D analysis agreed with low field DC measurement.**

**1500A/cable gives 1.05 T at the center (0.226 Tm)**

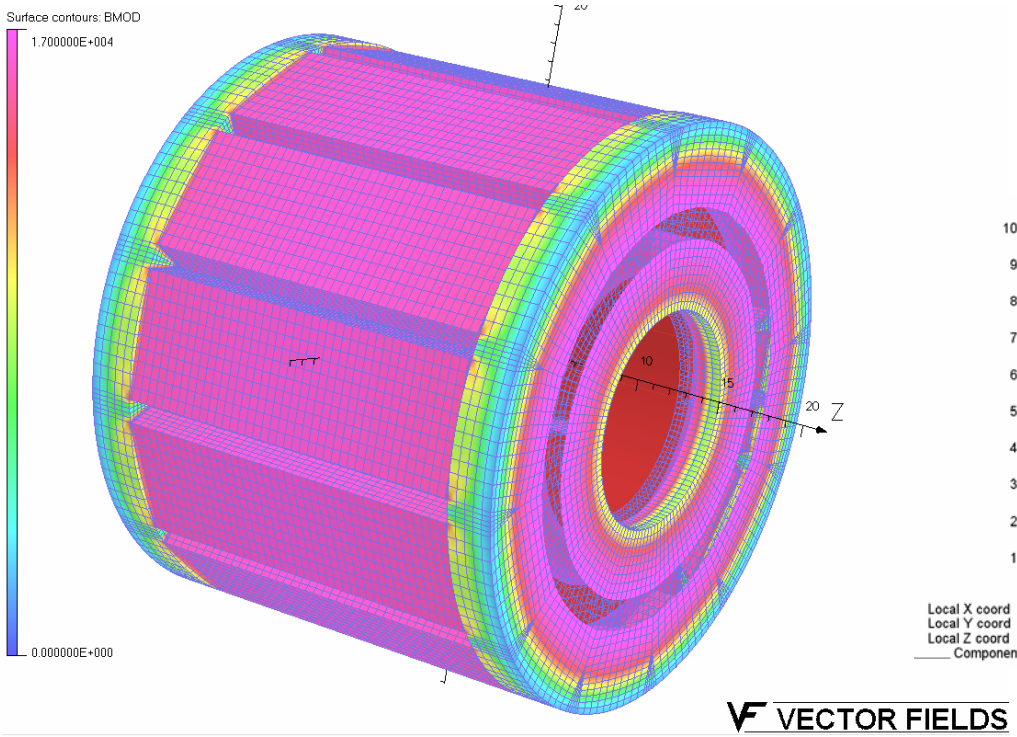


**Measured resistance : 22.6 mΩ**

**Measured inductance : 1.45 mH**

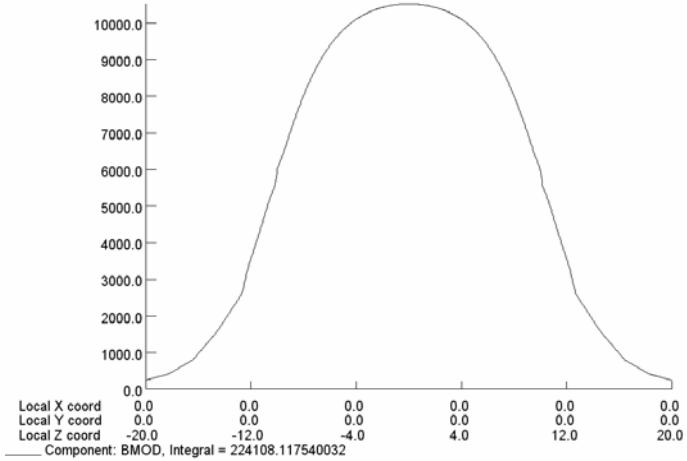

# LEBT Solenoid Magnet

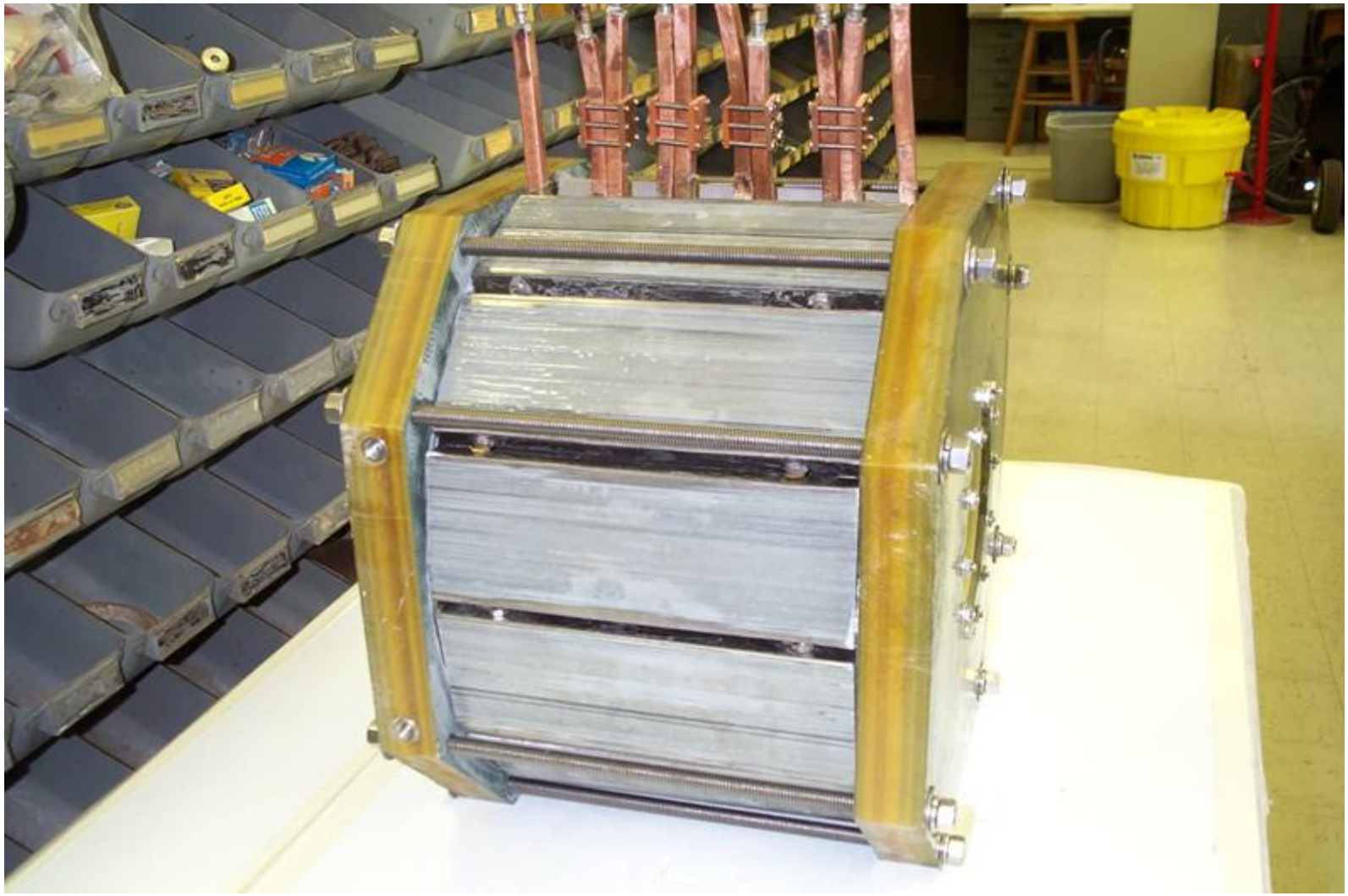

# MEBT quadrupoles

Strong field gradient with short length.

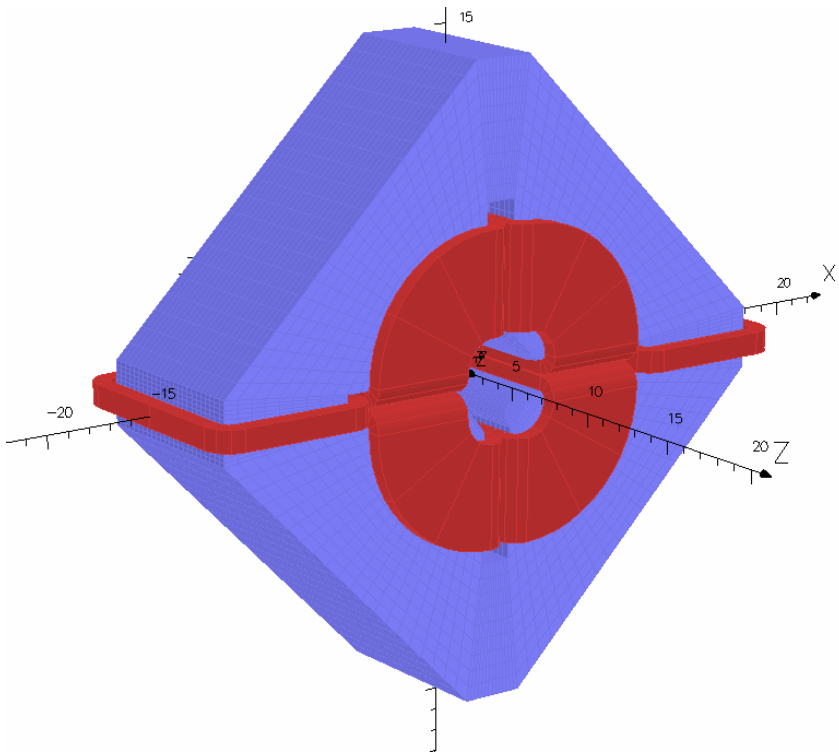


Bore radius : 16.6 mm
Field gradient : 70 Tm

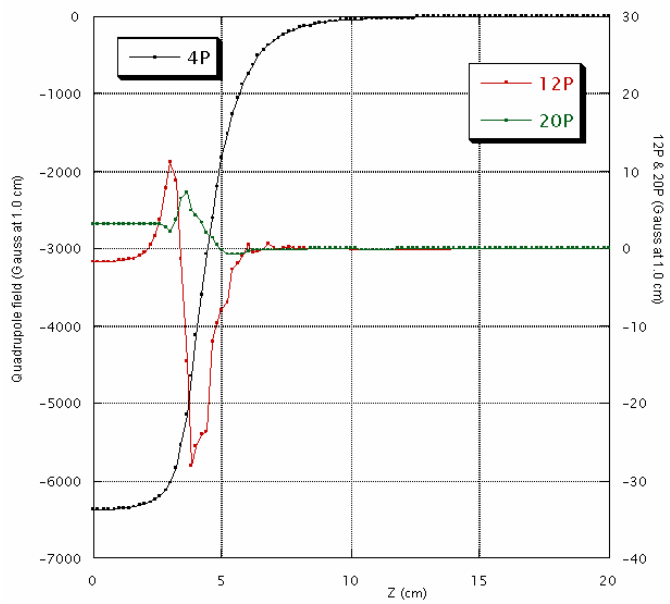


A test model (w/o trim) of the magnet works fine.

# MEBT Quadrupole Magnet Prototype

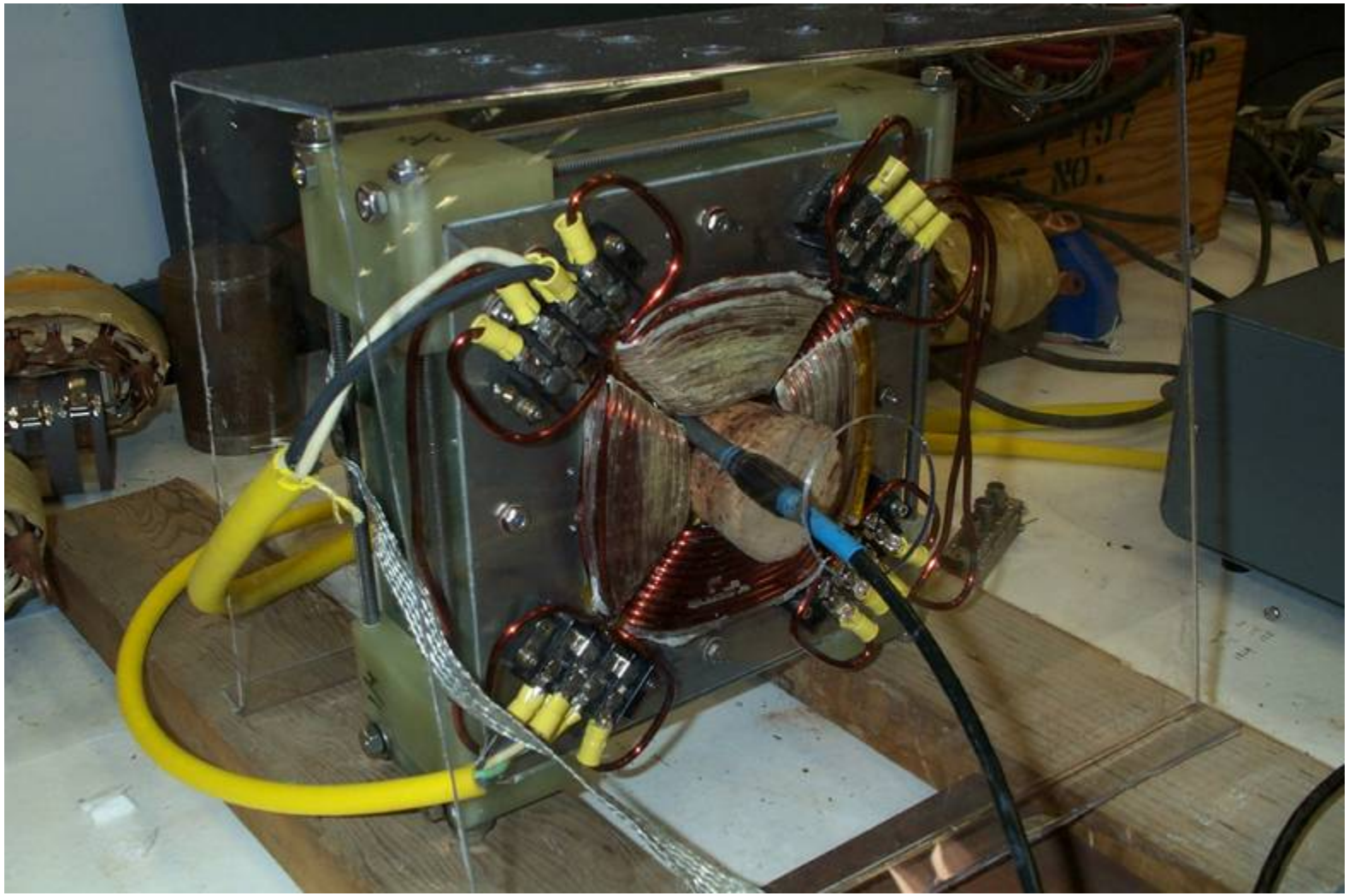

# MEBT quadrupoles

Trim coils will be used for steering the beams.

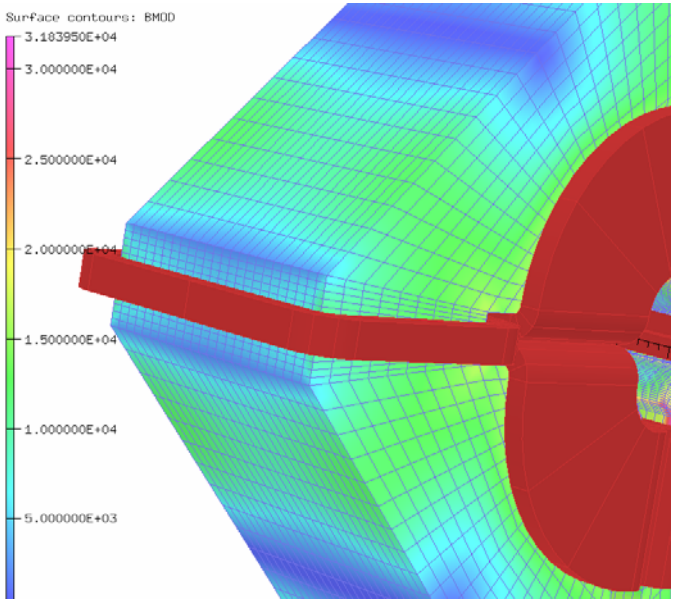


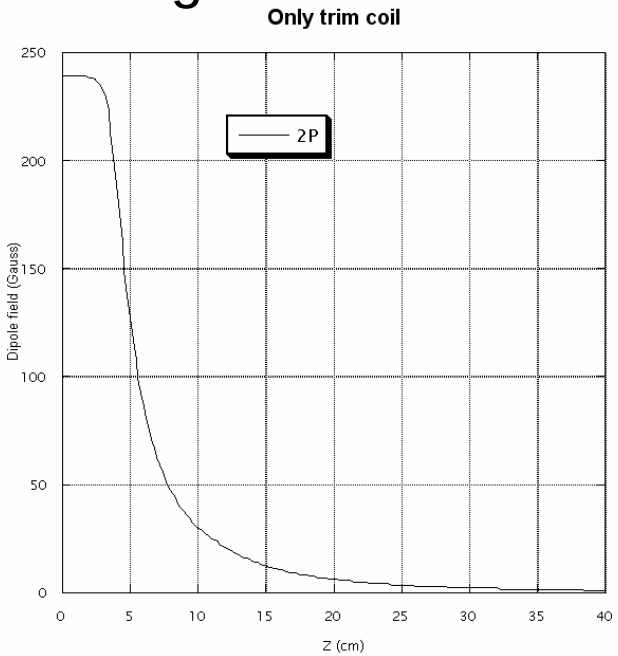


**The trim coil cross section is 7 x 10 mm which has 200A/cm$^2$ current flow. 240 Gauss with 13.5cm effective length. 6.4 mrad kick for Au$^{32+}$ beam.**

# MEBT quadrupoles

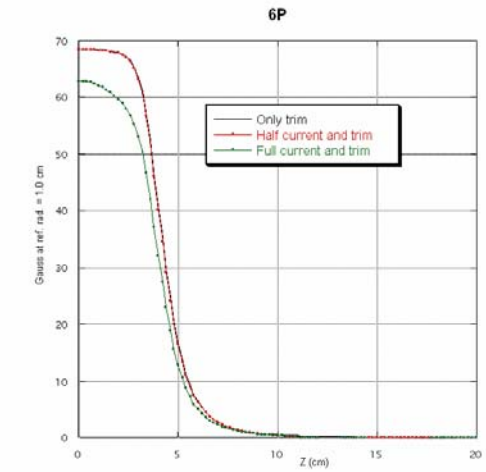


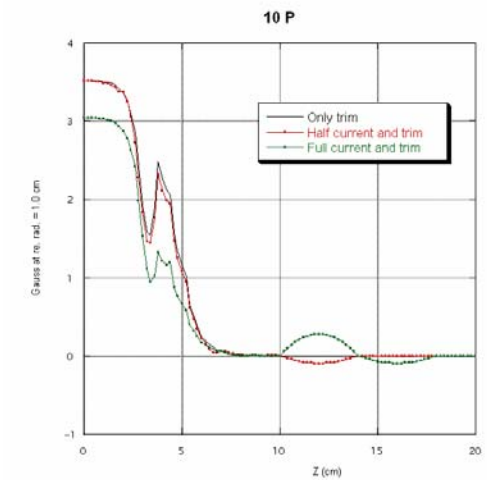


| | 2P | 4P | 6P | 10P | 12P | 14P | 18P | 20P |
|---|---|---|---|---|---|---|---|---|
| Trim | 3126 | | 623 | 29.5 | | -5.27 | -1.45 | |
| Half current | | -30581 | | | -39.8 | | | 15.9 |
| Half and trim | 3105 | -30581 | 617 | 28.0 | -39.6 | -4.77 | -1.10 | 15.9 |
| Full current | | -59639 | | | -56.7 | | | 31.3 |
| Full and trim | 2784 | -59612 | 534 | 23.8 | -56.5 | -6.38 | -0.93 | 31.9 |

Unit : Gauss cm

# HEBT quadrupoles

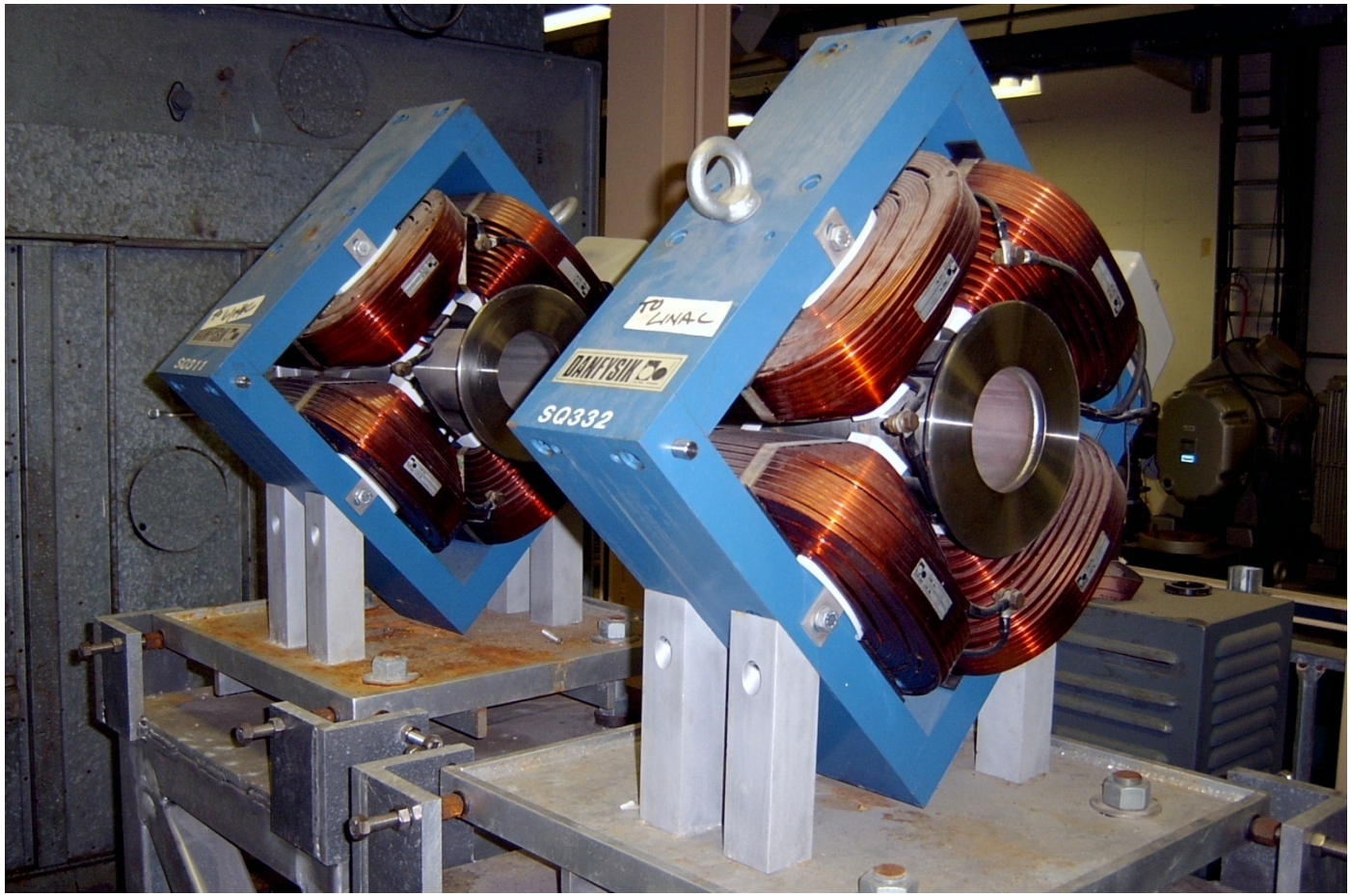


Existing quadrupoles for the HEBT.

# Summary

•Detailed magnetic design of the HEBT dipole was completed, and vendor proposals for fabrication have been evaluated.

•The LEBT solenoid is completed and performance is as expected.

•The MEBT quadrupole prototype was completed, and based on this experience, some minor design changes are being made to reduce saturation and make it easier to fabricate.