EBIS

EBIS Specification CAD-1194
Revision A
March 23, 2007

Specification
For
EBIS HEBT Dipole Magnets

Prepared by: _____
J. Ritter, Cognizant Engineer

Approved by: _____
D. Raparia, EBIS Physicist

Approved by: _____
J. Alessi, Project Manager

Approved by: _____
M. Okamura, Project Integrator

Approved by: _____
J. Tuozzolo, Chief ME

Approved by: _____
J. Sandberg, Chief EE

Approved by: _____
D. Passarello, Quality Assurance

Design Specification
for
EBIS HEBT Dipole Magnets

1.0 Scope

This Specification, in conjunction with associated drawings, magnetic field requirements, and other applicable documents, defines the design requirements, configuration, materials, quality assurance, inspection, testing, workmanship, cleaning, and packaging of a dipole magnet pair for the Electron Beam Ion Source (EBIS) injector to be installed at Brookhaven National Laboratory (BNL). The magnets supplied under this Specification will be used to guide ion beams into Booster.

The magnet system comprises

1. Two H-frame laminated dipole bending magnets (D1 & D2).
2. Stands, water manifolds, cable termination assemblies, and other mechanical components associated with each magnet to provide a complete "turn key" installation.

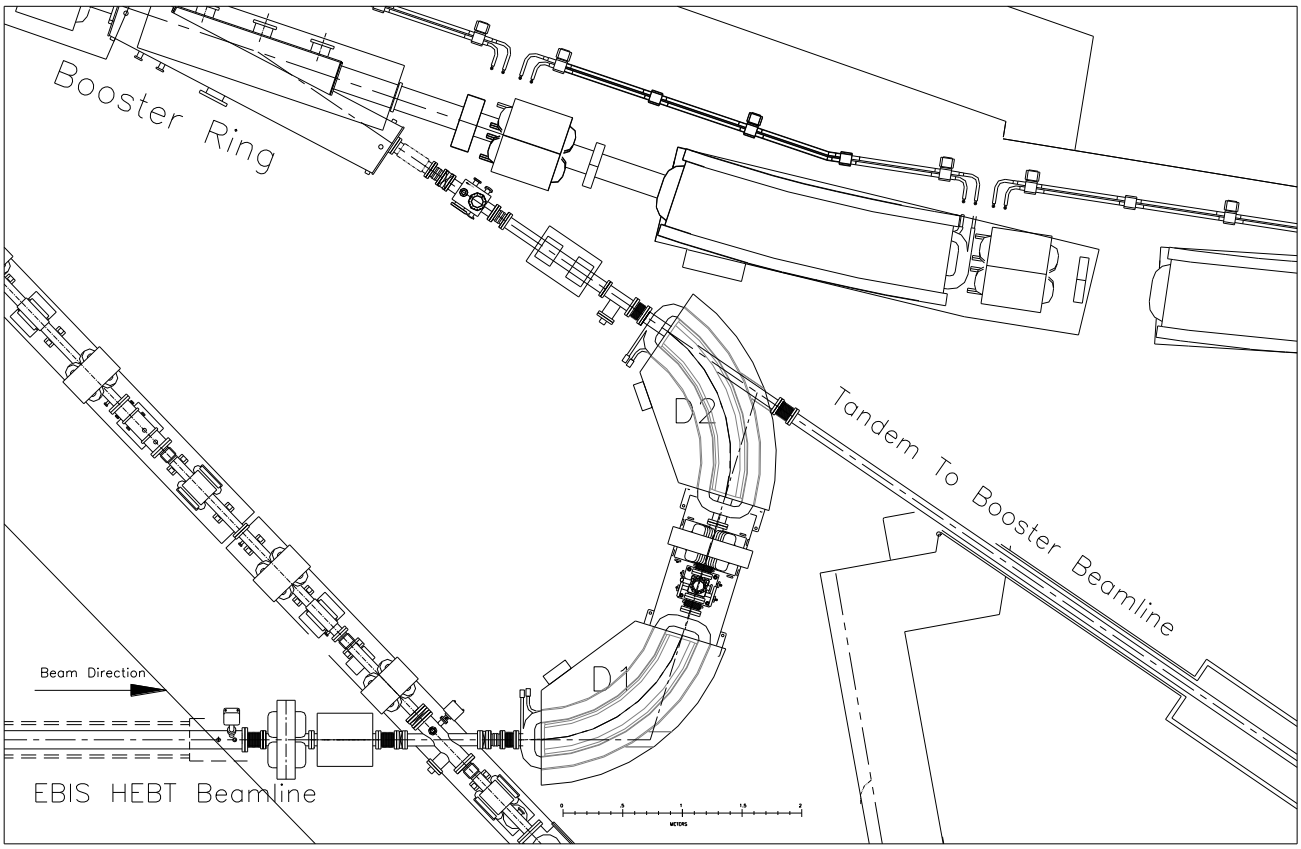

Figure 1: EBIS HEBT Layout

2.0 Applicable Documents

The following documents form a part of this Specification to the extent specified herein. Unless otherwise specified, the document issue date or revision level shall be that which is in effect on the requested bid submission date. Exceptions must be approved in writing by BNL.

Number	Title
BNL-QA-101	BNL Seller Quality Assurance Requirements
Title 29	Federal Regulations, Section 1910.1200 Appendix A & B
ASTM B170-99	Standard Specification for Oxygen-Free Electrolytic Copper

3.0 Design Requirements

3.1 Magnet Design

BNL has performed 3D computer numerical analysis to design the magnet core shape. The magnet core shape and coil parameters are provided in this specification. The Seller is responsible for developing the detailed design by following the BNL supplied information. The Seller is responsible for holding design reviews and transferring design information in a timely manner and for verifying that BNL has reviewed critical design decisions that affect other systems such as magnet power supplies.

3.1.1 Fabrication Drawings

The Seller must develop, and present for review, fabrication drawings for the magnets. The drawings shall reflect the BNL provided magnet core shape. The drawing dimensions must have tolerances specified that will allow the fabricated magnet components to meet the required dimensions of the BNL core shape. The Seller must provide to the Buyer a complete set of fabrication drawings that represent the "as built" magnets and electronic magnet drawing files in a mutually agreed to format (e.g., .dwg.).

3.2 Magnet Parameters

Table 1 lists the major performance requirements for the EBIS HEBT dipole magnets:

Bend Radius (cm)	Bend Angle (deg)	Gap (cm)	Operating Range (Tesla)	Edge Angle (deg)	Quality Field Region Horizontal (cm)	Quality Field Region Vertical (cm)	Field Quality	Variation of Effective Length in Operational Range
90	72.866	13.54	0.5 – 1.5	15	±5.1	±5.0	2.0×10^{-3}	±0.1%

Table 1: Dipole Magnet Performance Requirements.

3.2.1 Dipole Magnetic Field Quality

The Seller will follow the BNL supplied profile and edge chamfer to design and fabricate magnets that meet the vertical field strength over the magnet length specified in table 1. The multipole content for each multipole component type shall be less than 2×10^{-3} of the vertical magnetic field (integrated) as measured in the quality field region. The quality field region shall be centered vertically between the pole tips and shall fill the entire vertical gap in the horizontal region specified.

3.2.3 Magnetic Field Strength Switching

The dipoles shall be capable of switching between DC levels of 0 – 1.5 T, or any values in between, in 1 second. Within the one second switching time the field shall be stable to 1×10^{-4}. The magnet shall be capable of DC operation at the maximum field for both sets of coils (main and trim).

3.2.4 Dipole Magnet Additional Requirements

The dipole magnets will be powered in series from a single power supply for the primary water cooled coils and a second power supply for the trim coils.

3.3 Magnet Design

3.3.1 Yokes and Pole Pieces

The magnet shall consist of a rigid assembly of separable upper and lower halves that are dowelled and/or pinned together in such a way that their alignment is reproduced to provide the required field quality. The upper portion of the yoke, together with the upper pole piece and winding, shall be separable from the remainder of the magnet so that these may be lifted vertically to expose the vacuum chamber and lower pole surface. The split between the yoke halves is to occur at the midplane of the magnet. To support of the vacuum chamber, tapped holes on the entrance and exit face of each magnet shall be provided, size and position to be determined in consultation and approval by BNL.

3.3.2 Laminations

The lamination thickness shall be based on the switching performance parameter specified in 3.2.3, and shall be 1mm maximum. The use of thicker laminations may be permissible provided Seller submits analysis to BNL for review and approval. The material is to be M36 low carbon high permeability steel with specifications of chemical composition, mechanical properties, and

magnetic permeability appropriate for constructing a magnet that will meet the field homogeneity specifications of 3.2.1. Use of other steel is possible with written approval from BNL.

3.3.3 Finish

All exterior surfaces of pole pieces and yokes shall be free of rust, primed, and painted. All non-painted surfaces such as pole tips shall be suitably protected against rusting in a permanent way that does not impair the magnetic properties of the poles.

3.3.4 Lifting, Transport, and Splitting Magnet

Lifting eyes shall be provided on each top yoke to facilitate hoisting and moving of the entire assembly using 8 foot slings. The lifting eyes are required to be compliant with ASME B30. If a lifting fixture is required it shall be provided with the magnet shipment. The fixture shall arrive with supporting documentation, including calculations and lift-testing results and fixture certification. The magnet shall be designed to allow for lifting from the magnet stand using a forklift.

3.3.5 Mounting Stand

Space constraints in the Booster installation area drive the overall size of the magnet stands. The magnet stands must fit completely in the shaded are shown in figure 2. The magnet shall be supported by the stand, such that a horizontal plane passing through the center of the magnet gap can be placed a nominal distance of 60 inches above the floor. The magnet shall be independently adjustable in vertical and both transverse horizontal directions. The transverse directions are shown in figure 2. The translation shall be a minimum of ±20mm in vertical and each horizontal direction. The stand to floor interface shall be adjustable by ±12.5 mm on each stand leg.

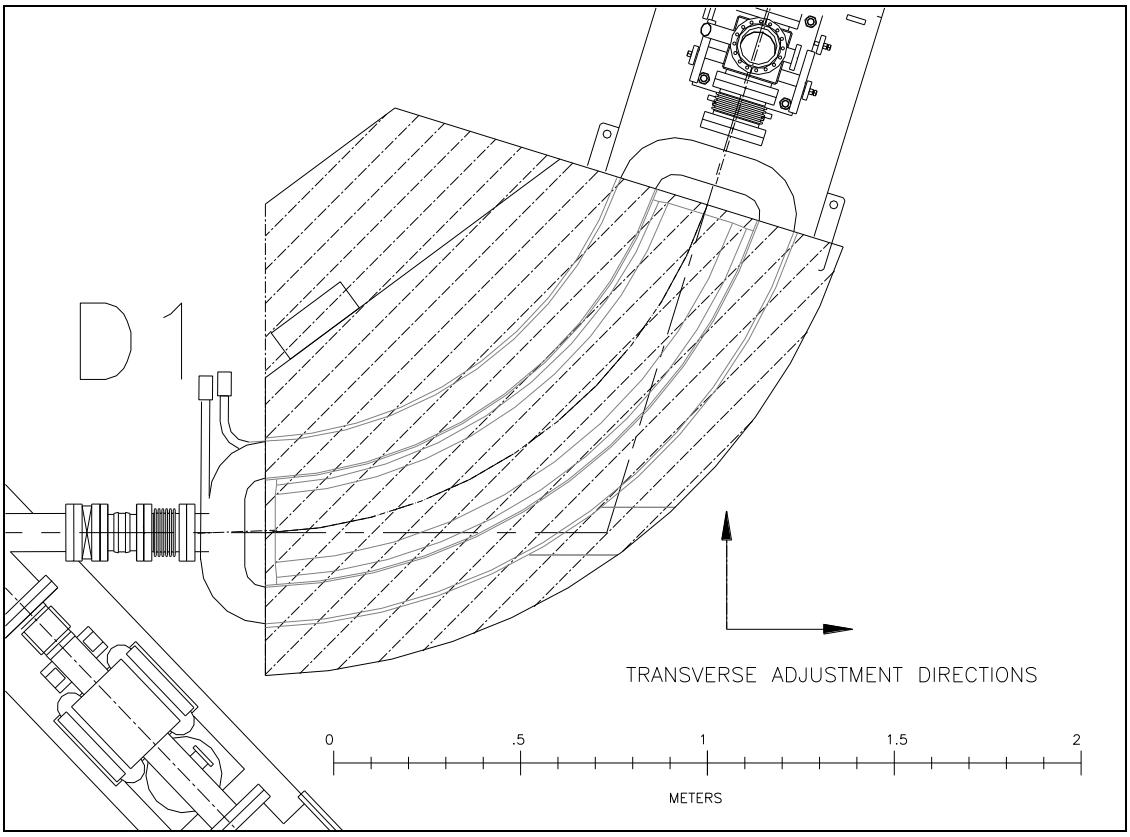

Figure 2: Stand

3.3.6 Alignment

For survey purposes (6) .250” +.0003 / -.000 diameter holes .75” deep will be bored in the top surface of the magnet for mounting 1” high survey devices. The alignment holes shall be arranged as shown in figure 3. BNL will approve positioning of survey holes prior to fabrication.

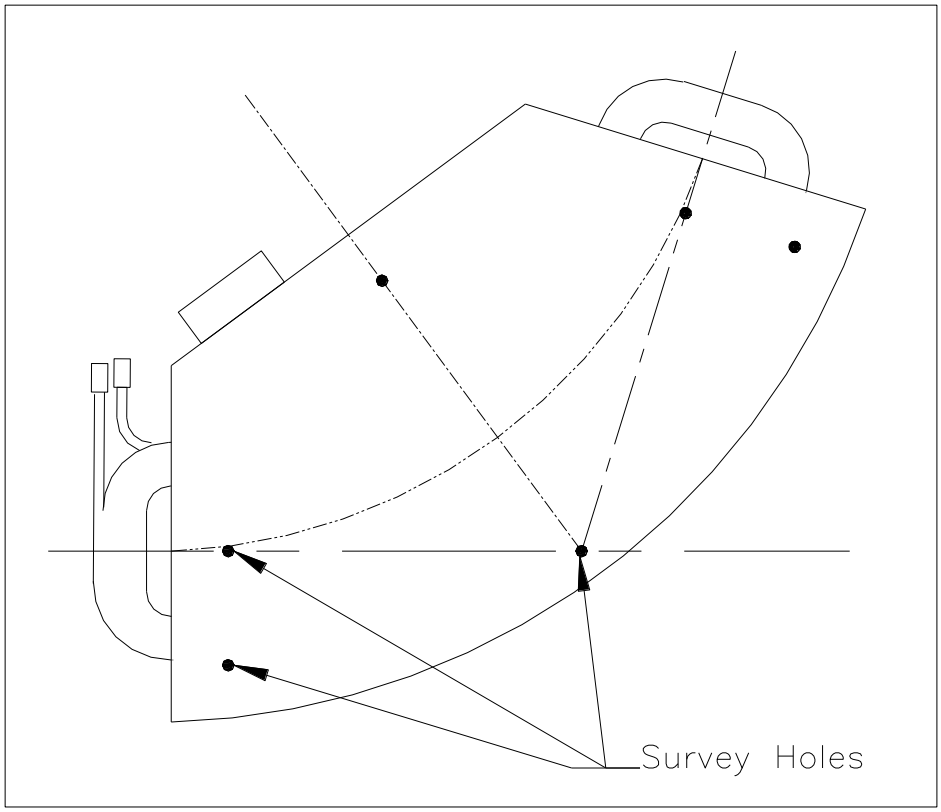

Figure 3: Survey Hole Positions

3.3.7 Pole Shape

The pole shape of the magnet is shown in figure 4. The pole design is based on magnetic analysis performed at BNL. Revisions of the end chamfer maybe necessary due to the steel lamination magnetic properties and packing factor. Any changes in the design will be by BNL following magnetic analysis. An additional straight-through path for a beam tube is to be provided as shown in figure 5. The straight through hole shall be either a 5” diameter hole or a square slot with 5” sides. The two assembled magnets are mirror images of each other, such that the straight-through holes are on opposite ends of the magnets as shown in figure 5. BNL will approve the final design prior to fabrication.

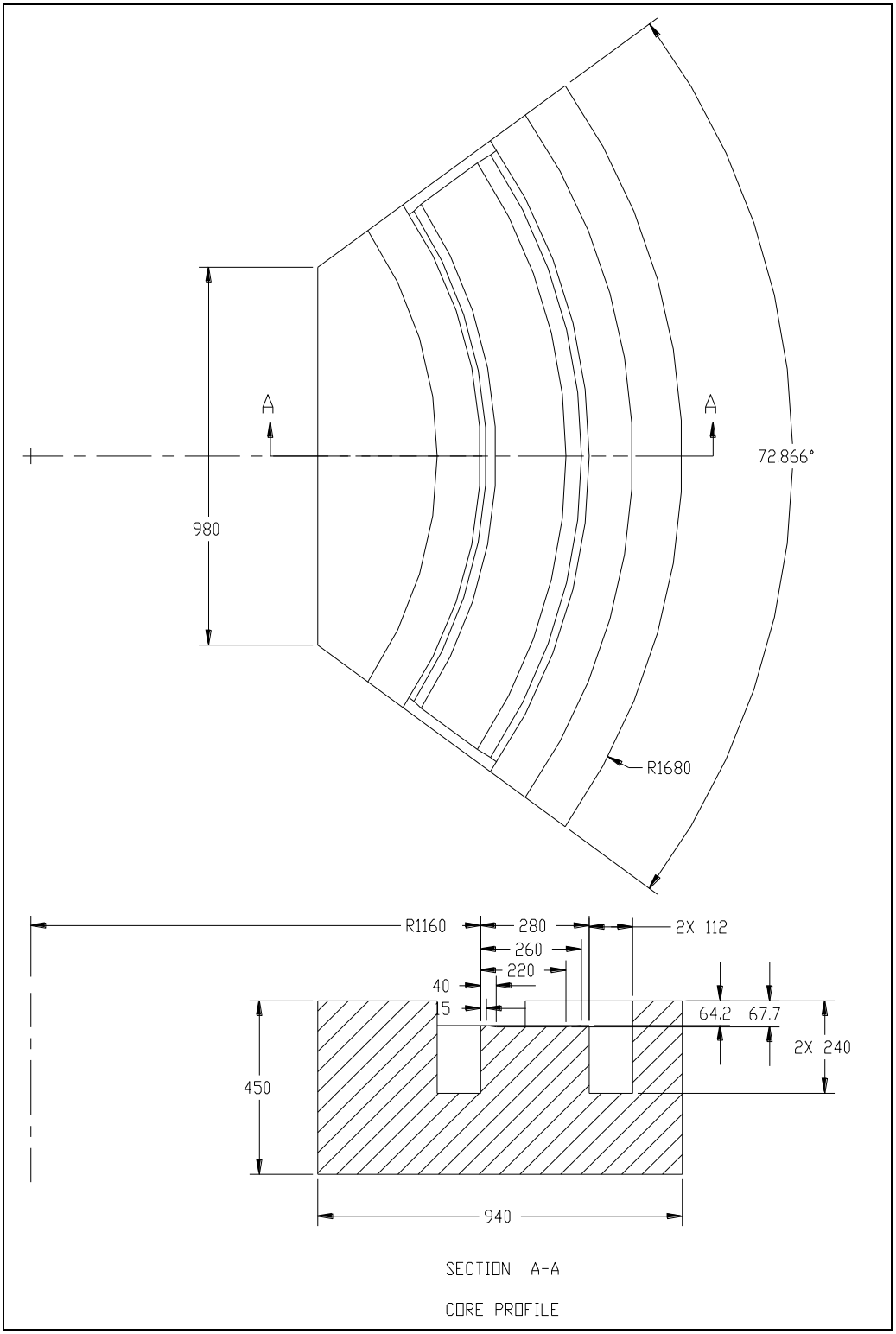

Figure 4: Magnet Core Design (For Clarity Straight Thru Hole Not Shown)
NEED TO ADD VIEW OF EDGE CHAMFER

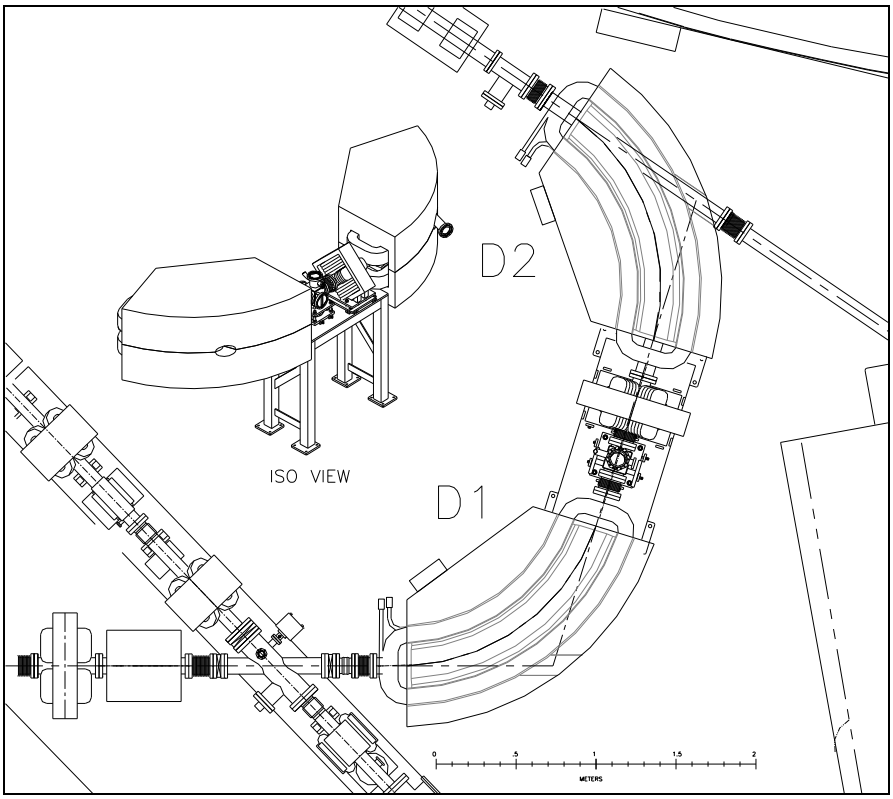

Figure 5: Straight Through Beam Path

3.4 Main Magnet Coils

3.4.1 Coil Description

The upper and lower pole of the dipole will each have a 24 turn water-cooled main coil. The 24 turn coil is made from three series electrically connected 8 turn pancake-type coils. Each of the 8 turn coils will be indentical to allow for a common coil spare. The pancake coils will be cooled by parallel water flow. The current density for the coils shall not exceed 650 Amp/cm^2 of the conductor's copper cross-section. The coil conductors shall be hollow oxygen-free electrolytic copper (OFHC), Grade 1, in accordance with the latest revision of ASTM Standard referred to in Section 2.0 of this Specification. The coils along with coil description is shown in figure 6. Do to space constraints the maximum dimensions the coils can extend from the magnet ends are defined in figure 7.

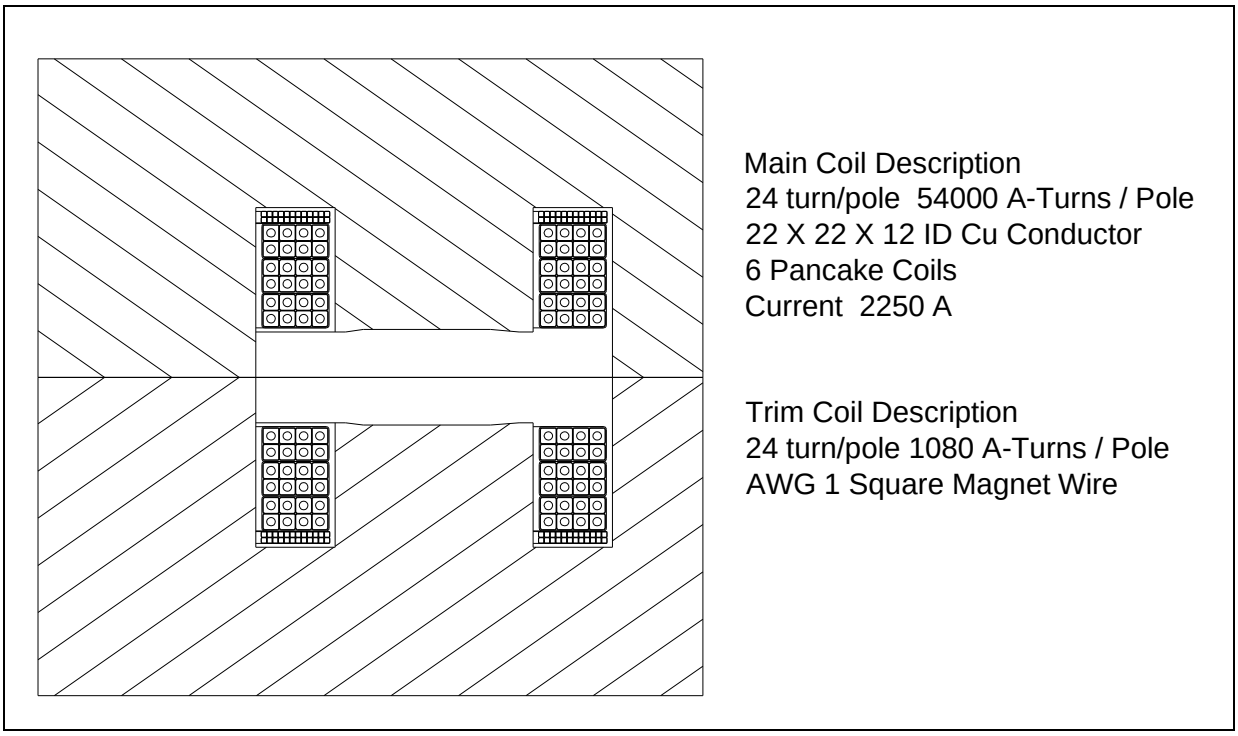

Figure 6: Coil Size and Description

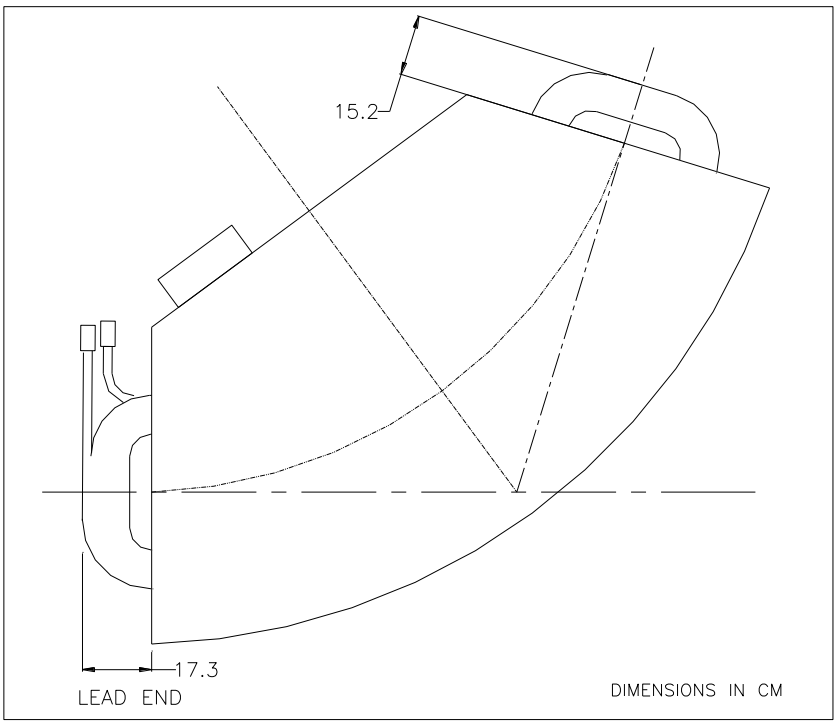

Figure 7: Coil End Dimensions

3.4.2 Conductor Joints

Coil pancakes shall be fabricated using a single length of copper conductor with no internal joints allowed. End joint design and brazing methods must be submitted to the buyer for approval prior to coil fabrication.

3.4.3 Insulation

The turn-to-turn insulation shall consist of glass fiber tape, amino-silane treated pure E-glass tape or approved equivalent, half-tap wound and shall be a minimum of 0.5 mm (0.020") thick. The outer wrapping of coil to ground insulation shall be a minimum of 1.5 mm (0.060") thick. Alternative types of glass insulation are permissible with BNL written approval. Filler blocks, if required, shall be of G-10 material. . Any voids at the transitions between the coil layers or near the terminations shall be filled with glass roving or G10 prior to the ground wrap. This is to avoid un-reinforced resin areas in the coil structure after impregnation.

3.4.4 Coil Impregnation

The insulation between the bare copper turns and all of the insulation layers shall be impregnated with bonding resins and shall be cured to bond the coil and insulation into a monolithic structure with full mechanical strength. No voids shall exist between the conductor and insulation and between the insulation layers. All insulating materials used shall be compatible with each other and the copper.

The preferred coil impregnating resin system is as follows:

#DER 332 (Dow Chemical) DGEBA Resin	50 pbw
#DER 736 (Dow Chemical) Polyglyc ol Flexible Resin	50 pbw

and cured with:

NMA (Allied Chemical Company) Nadic Methyl Anhydride	90 pbw

Acceleration of cure will be through the use of:

DMP-30 (Rohm & Haas) Tridimethyl Amino Methyl Phenol.	1.5 pbw

In lieu of the above, the Seller may submit to the Buyer, for approval, the exact impregnation epoxy mix formulation and curing cycle description of an alternate mix. The alternate mix, however, must have equal or better physical properties and resistance to nuclear radiation at a minimum exposure of 1×10^{8} Gy than the specified system.

3.4.5 Impregnation Form

In order to maintain dimensional tolerances, rigid tooling must be used for the curing cycle of the epoxy. Sizing and curing operations must be performed simultaneously. The form shall be designed to withstand the cure vacuum/pressure cycle used by the Seller and to provide completed coils that meet the specified dimensions.

3.4.6 Impregnation Procedure:

1. The impregnation form and the coil in it shall be preheated to 120 ± 5 ^{o}F (for half an hour before impregnation).
2. The impregnation form shall be vacuum pumped to 200 microns or less.
3. The epoxy mix shall be de-aerated and preheated to 120 ± 5 ^{o}F in an appropriate tank. DMP-30 shall be added to the mix 3-5 minutes prior to potting.
4. The impregnation form shall be filled with the epoxy mix while under vacuum, then pressurized to 10 psig for 1 hour with an inert gas (i.e. nitrogen, argon, helium, etc.).
5. The epoxy curing cycle recommended by the Seller and accepted by the Buyer shall be such as to minimize distortion and cracking of the surface. The typical curing cycle for the "preferred epoxy mix" is:

   180 deg ± 5 deg F for 4 hours
   260 deg ± 5 deg F for 10 hours
   Cooled to 140 deg F in not less than 5 hours to minimize distortion.

3.4.7 Manifolds

All manifolds necessary for cooling water distribution shall be provided. Water lines shall withstand 17.4 bar (250-psig) test pressure. Hoses on upper coils shall be long enough to allow for the upper coil/yoke assembly to be lifted for vacuum chamber removal without disconnecting the hoses. The water system fittings shall be Parker Fluid connectors brass FTX type Triple-Lok, 37° flared tube end/male pipe end conforming to SAE 070102 (Parker Hannifin Corp. Columbus, Ohio). The electrical isolation break shall be provided by SynflexR® hoses type 3740 with orange non-perforated cover, electrically non-conductive conforming to SAE100R7 or a Buyer-approved equivalent. To reduce the possibility of radiation damage the hoses shall NOT be routed between the magnet coils near the aperture of the magnet. Where electrical isolation is not required copper tubing with Buyer approved brass fittings shall be used.

3.5 Trim Coils

3.5.1 Trim Coil Description

The independently wired 24 turn trim coil shall operate up to 2% of the primary coil magnetic maximum strength. The trim coil shall use solid conductor and shall be designed to be air-cooled or conduction cooled through the insulation to the main coil. The conductor shall be oxygen-free copper (OFHC), Grade 1, solid core, copper wire or bus. The minimum electrical conductivity shall be 101% IACS. The copper shall be delivered in an annealed (dead soft temper). The conductor shall be delivered with a Kapton® or polyimide electrically insulated coating that is continuous and free of voids. The coating shall hold 5000 Volts D.C.

3.5.2 Magnet Trim Coil Winding

The coil winding shall be configured in accordance with the applicable drawings. Special attention shall be given to the location of starting point and end point and the tolerances associated with those points. Proper winding location is critical to the field quality of the magnet. Each coil shall be wound of a continuous conductor. No joints shall be made on an individual pole coil winding. The copper surfaces and insulation shall not be contaminated with dirt, grease, etc. during the winding operation. Clean gloves shall always be used to handle the clean conductor material.

3.5.4 Magnet Trim Coil Epoxy

As the coil is wound epoxy shall be applied to the coil to insure that there are no heat insulating voids between the winding layers. The Seller will vacuum impregnate the coil with epoxy after winding with a low viscosity epoxy that will not leave voids between winding. The epoxy formulation and methods described in sections 3.4.4, 3.4.5 and 3.4.6 shall be followed for the trim coil. A separate ground insulation of Kapton® sheet or impregnated glass fiber shall be used between the magnet steel and coil supports and the coil winding. All insulating materials used shall be compatible with each other and the copper. After application of the complete insulating system the coil must pass the tests in section 4.5 of this specification.

3.5.4 Coating

The coil assembly shall be painted with clear Dow Corning R-4-3117 conformal coating to protect the coil from moisture absorption after impregnation.

3.5.4 Coil Repairs

The completed coils shall be free of voids, fissures, cracks, or other defects. Coils with defective or damaged internal insulation shall be rejected and may not be repaired. External defects may be repaired, contingent, in each instance, upon prior Buyer written authorization, including approval of the procedure and materials to be used in the repair. The Buyer will not accept any coil

assembly that has been reworked or repaired in whole or in part unless the rework or repair was authorized in writing by BNL.

3.6 Coil Termination Assemblies

The magnets shall be provided with terminal blocks or attachment flags for the cable termination lugs. The terminal location for each of the magnets is shown in figure 1. The weight of the termination and the cable shall be supported by the core steel of the magnet not the magnet coil leads. Bus of sufficient size and rating shall be used between the coil ends and the termination block. All mating surfaces shall be silver plated to provide a low resistance joint. The terminal support insulation shall be sufficient to allow the magnet assembly to meet the test requirements of section 4.3 herein. Air cooled coil ends and trim windings ends shall be thoroughly cleaned of the Kapton® or polyimide insulation. Special attention must be paid to the loops leading to the terminal blocks in order to protect the integrity of the terminals blocks. The end loops should be carefully formed so that they do not put force on the terminal that could cause poor electrical contact or mechanical stress. Also the loops should be kept close to the magnet so they do not take up beam line space adjacent to the magnet.

3.6 Coil Temperature Monitoring

Thermal protection for the magnet coils shall be provided by thermal switches that open when the surface temperature exceeds a preset value of 150 °F. The thermal switches shall be part number 3156-009-009 silhouette hermetic thermostats from Elmwood Sensors Inc., Pawtucket RI (w/terminals mounted at 90°, manual reset, solder connections, gold plated terminals, 16mAmps D.C.). There shall be one thermal switch located on the water discharge end surface of each water-cooled coil that shall be in good thermal contact with the coil. On the air-cooled coils, there shall be one thermal switch per coil assembly located on the external surface in the middle of each coil. The thermal switches shall be electrically insulated from the copper conductor.

3.7 Magnet Assembly Marking

Prior to shipping, each magnet shall have an identification plate mounted to the core steel. The plate information shall include the magnets assembly drawing number with revision, its serial number, maximum magnetic field, the maximum current, the effective length, the actual weight of the magnet assembly, and the Seller's name. All terminations – power, trim, monitoring (Klixon), etc. shall be labeled.

3.8 Repairs

The Buyer will not accept any magnet assembly that has been reworked or repaired in whole or in part unless the rework or repair was authorized in writing by the Buyer.

3.9 Hazardous Materials

Materials that may be defined as hazardous in accordance with Title 29, Code of Federal Regulations, Section 1910.1200 Appendix A and B shall not be used without written approval from the Buyer.

4.0 QUALITY ASSURANCE PROVISIONS

4.1 General - Articles furnished in compliance with this Specification shall be produced under the controls established herein and as required by the applicable contract. Additional Quality Assurance requirements are in accordance with BNL Quality Assurance (QA)-101, Sections 1,2,3 (including 3.1 and 3.1.2), 4.1, 4.3, 4.5, 4.10, 4.10.1, 4.10.2, 4.16, 4.20, and 4.21.

The Seller shall supply the Buyer with electronic files and "hard copy" drawings of all Seller provided components. The electronic files shall be in a Buyer approved file format (for example: *.dwg)

4.2 Acceptance Tests - Acceptance tests shall be performed to verify that articles supplied under the contract meet the standards established in Section 3. Acceptance or approval of material during the course of manufacture shall not be construed as a guarantee of its acceptance in the finished product. All articles shall have satisfactorily passed the applicable acceptance tests prior to delivery. The acceptance test data for each delivered magnet shall be recorded on a **"MAGNET INSPECTION DATA SHEET"** (attached). The acceptance test data for each delivered coil shall be recorded on a **"Coil Inspection Data Sheet"** (attached). Copies of the Seller certified test results shall be submitted to the Buyer with or before each magnet delivery.

4.3 Magnet Coil Acceptance Testing

4.3.1 Steel Ball Test

Prior to insulating the coil, the Seller shall blow a polished steel ball through the cooling passage(s) of the conductor. The ball diameter shall not be less than 60% of the cooling passage diameter specified on the drawing. This is to check for braze material or any other obstruction in the cooling passage. Coils that can not pass the ball shall be rejected.

4.3.2 Leak Check

Prior to insulating the coil, its water passage shall be thoroughly washed by flowing water at 180 to 200°F for at least 15 minutes, followed by flowing water at room temperature for 15 minutes. The water passage shall then be dried by blowing air through it. When dry, the entire assembly shall be enclosed in a polyethylene bag or other suitable enclosure and a helium leak test shall be made on the entire assembly. As a substitute check, a halogen-sensitive detector may be used by pressurizing the water passage with a halogen gas compound for 10 minutes minimum at 150 psig pressure. The joints and entire coil shall be probed for leaks. The leak rate of halogen gas shall not exceed 0.5 ounce per year.

4.3.3 Hydrostatic Test

Prior to insulating the coil, it shall be filled with water and pressured to 300 psig. The coil shall be isolated from the pressure source for a period of 1 hour and any pressure changes shall be recorded on the Coil Data Sheet at intervals of 15 minutes. Recorded data shall include the following:

Coil water pressure to the nearest 0.5 psig.
Coil water temperature to within 2 deg F.

The coil shall show no evidence of external leakage or internal pressure drop other than that resulting from any changes in water temperature.

4.3.4 Hydraulic Flow Test

Prior to insulating the coil, it shall be checked for water flow in gallons per minute at a pressure differential of 85 psi with a water temperature range of 60°F to 80°F. Any coil whose water flow rate exceeds ± 10% of the average rate for all the coils produced and ± 15% of the calculated flow rate shall be rejected.

4.4 Coil Tests After Insulation Has Been Applied

4.4.1 Ground Insulation

The insulation to ground shall be tested to withstand 5000 volts DC for one minute applied between the conductor and metal foil wrapped tightly over the entire insulation surface. Evidence of insulation breakdown or damage or a leakage current which exceeds 100 microamps at 5000 volts DC shall be cause for rejection.

4.4.2 Turn-to-Turn Insulation

The turn-to-turn insulation shall be tested either by applying 1600 volts peak-to-peak high frequency for one minute across the coil terminals or by applying a 2000 volt peak impulse having a rise time of 1 to 5 microseconds. This is done by switching a capacitor across the terminals of the coil so that a resonant circuit is formed (method similar to that described in AIEE conference paper No. 57-295, "High Voltage Surge Tests for Detecting Faults Between Turns of Rotating Machines"). There shall be no indication of breakdown between turns, as indicated by a scope trace of the oscillations (see last page of this Specification figures 2A and 2B). The actual scope trace for each coil must be attached to the data sheet. For air cooled coils and trim coils, the turn-to-turn insulation shall be tested either by applying 200 volts peak-to-peak @ 400Hz for one minute across the terminals of each coil or by applying a 200-volt peak impulse having a rise time of 1 to 5 microseconds.

4.4.3 Coil Resistance

The Ohmic resistance of the coil shall be measured and recorded to four significant figures, at 70 $\pm 5\ ^{o}$F, by means of a standard commercial Double Kelvin Bridge. Ohmic resistance readings that exceed $\pm$ 5% of the average readings for all the coils produced shall be cause for test failure. Ohmic resistance readings that exceed by 10% the expected calculated resistance for the conductor size and length shall be cause for test failure.

4.4.4 Visual Inspection

The Seller shall inspect each coil assembly for voids, cracks, fissures, or other defects before installation into the magnet or preparation for shipping, if the coil is a spare.

4.5 Magnet Assembly Factory Testing

4.5.1 Hydrostatic Test
After assembling the magnet the water cooling system shall be filled with water and pressurized to 300 psig. The magnet shall be isolated from the pressure source for a period of 1 hour and any pressure changes shall be recorded on the Magnet Traveler Sheet at intervals of 15 minutes. Recorded data shall include the following:

Coil water pressure to the nearest 0.5 psig.
Coil water temperature to within 2 deg F.

The magnet assembly shall show no evidence of external leakage or internal pressure drop other than that resulting from any changes in water temperature.

4.5.2 Hydraulic Flow Test

After assembling the magnets, they shall be checked for water flow in gallons per minute at a pressure differential of 85 psi with a water temperature range of 60°F to 95°F. No magnet shall have a flow rate that is 20% less than the average for the other magnets of the same type and within ± 20% of the calculated flow rate.

4.5.3 Ground Insulation

The insulation to ground of the fully assembled magnet shall be tested to withstand 5,000 volts DC for one minute applied between the coil leads and the magnet core. Evidence of insulation breakdown or damage or a leakage current that exceeds 100 micro amps at 5,000 volts DC shall be cause for rejection.

4.5.4 Magnet Resistance

The Ohmic resistance of the assembled magnet shall be measured and recorded to four significant figures, at 70 ±5 °F, by means of a standard commercial Double Kelvin Bridge. Ohmic resistance readings that exceed ± 10% of the average readings for all the magnets produced or that does not meet the resistance specified by the Buyer shall be rejected. Ohmic resistance readings that excel 15% of the calculated coil resistance shall be rejected.

4.5.5 Dimensional Compliance

The Seller shall inspect and verify dimensional compliance of the core and coils to their respective drawing. THIS SECTION MAY NEED TO BE EXPANDED. Maybe add a DIMENSIONAL INSPECTION DATA SHEET?

4.5.6 Visual Inspection

The Seller shall inspect the magnet assembly for voids, cracks, fissures, missing hardware, or other defects before packing and shipping.

4.6 Magnetic Measurement

The Seller shall conduct D.C. magnetic measurements to verify the quality of the magnet. This data is to be correlated to the survey fiducals and mounts that are located on the magnet core steel. The survey information, field measurements, and other pertinent data shall be sent to the Buyer in a digital format agreed to by the Buyer and the Seller.

4.6.1 Magnetic Measurement

For each magnet, measure the hysteresis curve and four field maps at the values specified in 4.7.1.3. Magnetic field(s) should be measured with absolute accuracy of ± 0.25 G (i.e.± 0.025 mT) or better. Measurements can be done using a single element or a linear array of high precision sensors of magnetic field (presumably Hall probe(s)). It is necessary to measure the vertical component of the magnetic field in the exact mid-plane of the magnet. In the case of

using direction sensitive probes or sensors (such as Hall probes), the axis of the probe's sensitivity should be oriented vertically with accuracy of ± 0.25 degrees. Measurements of the excitation (coil) current should also be produced with the absolute accuracy of ± 50 ppm or better.

Complementary information of the horizontal or/and longitudinal components of the magnetic field for sensors located off-the-median plane will be useful, but is not required.

4.6.1.1 Hysteresis Curve Tests: The center of the sensor (the central element in the case of the array) should be located in the mid-plane of the magnet (i.e., in the middle of the dipole gap) with accuracy of ± 0.1 mm and in the geometrical center of the magnet with accuracy of ± 0.1 mm in radial direction and ± 0.2 mm in lateral direction.
The hysteresis curve should be measured as follows (see Fig. 1):

a) Starting from a zero current, the current should be ramped-up in 100 equal steps to the maximum current; it should be done in step by step fashion with the measurements of the coil current and the magnetic field at the flat parts of the ramps (see Fig.2), i.e. after the transition of the current increase is finished and the current and the field are stabilized. The measurements of the magnetic field and the coil excitation current should be synchronized.
b) The ramp-up should be followed by a fixed duration (10-to-30 seconds) flat-top at the maximum current, during which the measurements should be continued with at least 10 evenly-spaced measurements at the flat top;
c) The flat-top should be followed by the ramp-down, which should have the same measurements procedure as the ramp-up (i.e. step by step ramp down and measurements of both coil current and the field);
d) The ramp-down should be followed by a fixed duration (10-to-30 seconds) at zero current, during which the measurements should be continued with at least 10 evenly-spaced measurements at the zero (flat-down);
e) The cycle should be repeated five times for each magnet tested.

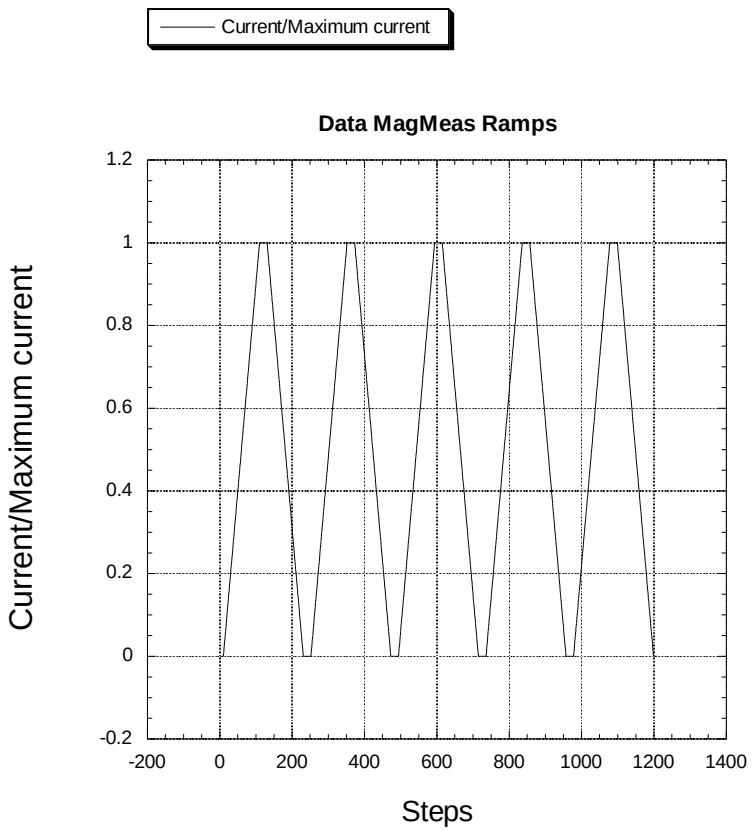

Fig. 1. Measurements of the hysteresis curve.

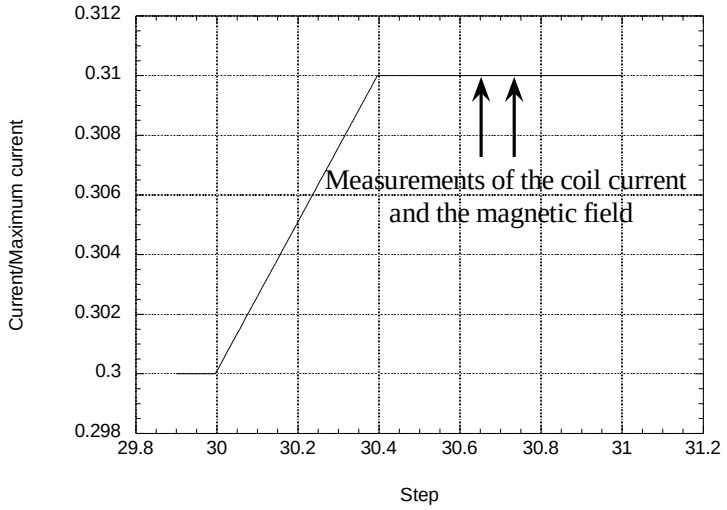

Fig. 2. One step in the current and one measurement.

The Hysteresis curve data should be presented in the following format:

a) Description, diagram and, if possible, photograph of the measurement system;
b) Geometry of the magnetic measuring sensor(s) and the location(s) in the magnet during the measurements;
c) Table with the title and unique number of the dipole magnet filled with the measurement data in the following form;

Time [sec] stamp	Main Coil [A] current	B1 [G or T] sensor 1	(more columns with B) (in the case of sensor array)
.....	.....	.....	.....
.....	.....	.....	.....
.....	.....	.....	.....
.....	.....	.....	.....

Data should be presented in ASCI format with at least 6 significant digits.

4.7.1.2 Trim Coil Tests: The hysteresis measurement should be followed by a ramp-up of the main coil to 50% of the maximum value, and measuring of the field response on the trim coil current in 5 steps:

1) at zero trim coil current,
2) maximum (positive) trim coil current,
3) at zero trim coil current
4) maximum (negative) trim coil current,
5) at zero trim coil current

Trim coil current should be measured with accuracy of ± 0.1% or better.

The Trim Coil Test Table, containing the title and unique number of the dipole magnet, shall be completed with the measurement data in the following form:

Time [sec] stamp	Main Coil current [A]	Trim coil current [A]	B1 [G or T] sensor 1	(more columns with B) (in the case of sensor array)
.....	.....	.....	.....	.....
.....	.....	.....	.....	.....
.....	.....	.....	.....	.....
.....	.....	.....	.....	.....
.....	.....	.....	.....	.....

Data should be presented in ASCI format with at least 6 significant digits.

4.7.1.3 Field Map Measurements:

The field map for each magnet should be preceded by five regular hysteresis cycles, as described above. Field map measurements for the magnets should be done at 5 level of current: zero, 25%, 50%, 75% and 100%.

All coordinates for the map should be related to the geometrical center of the dipole magnet with absolute accuracy of ± 0.1 mm or better. Sensor(s) must be located in the mid-plane of the dipole with accuracy of ± 0.1 mm and their sensitivity axis must be oriented vertically with accuracy of ± 0.25 degrees. The coordinates are 5cm array centered on the magnetic radius as shown in figure 8. 21 points are to be measured on both ends of the magnet.

The field map can be measured either:

a) by a single sensor moved in the mid-plane X-Y on grid by 2D positioning system. Relative errors of the probe positioning should not exceed ± 25 micrometers.

b) by a linear sensor array. The distance between centers of the sensors should be known with accuracy of ± 25 micrometers.

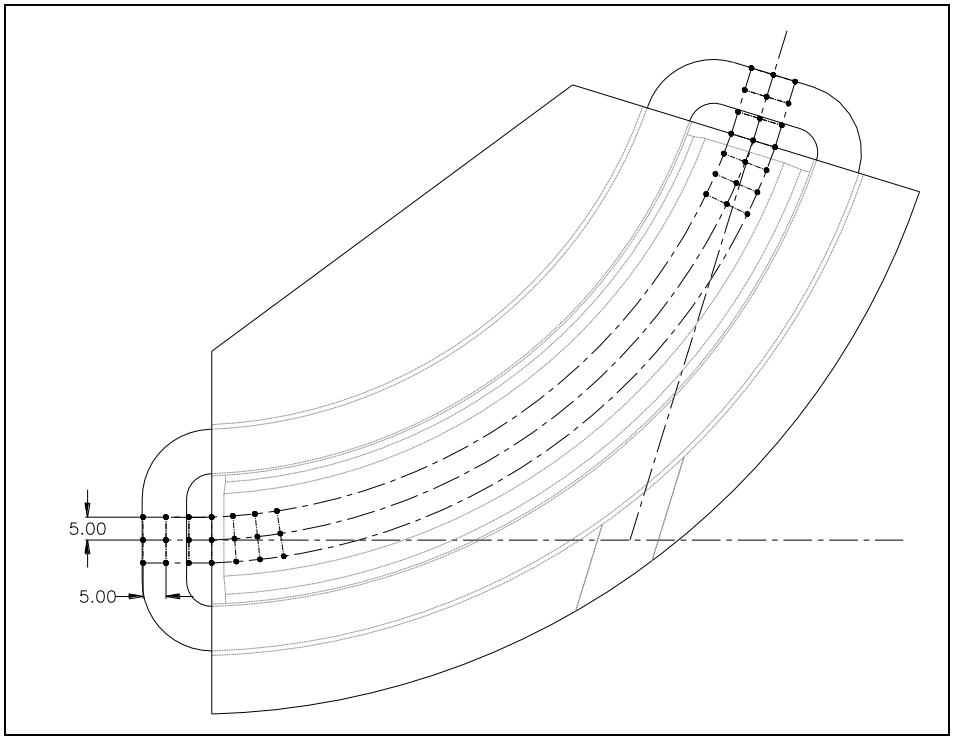

Figure 8: Magnetic Measurment Sensor Array

The map is measured at the constant setting of the excitation (coil) current after all transient processes have diminished. Similarly to the hysteresis measurements, each magnetic measurement (± 0.25 G or better absolute accuracy) will be synchronized with the measurement of the coil excitation current (±50 ppm or better absolute accuracy).

The map data should be presented in the following form:

1. with a description, diagram and, if possible, photograph of the measurement system;
2. with the geometry of the magnetic measuring sensor(s) and the location(s) in the magnet during the measurements:
   a. In the case of the single sensor, the specifications of the 2D coordinate mechanism
   b. In the case of the sensor array – the specification of the sensor, its geometry and list of 3D coordinates for each sensor (with respect to the center sensor)

d) in a Table with the title and unique number of the dipole magnet filled with the measurement data in the following format;

Note: trim coil must be disconnected for all map measurements

For a single sensor mapping:

Time [sec] stamp	Current [A] Main Coil	X[mm]	Y[mm]	B1 [G or T]
.....	.....	.....	.....	.....
.....	.....	.....	.....	.....
.....	.....	.....	.....	.....
.....	.....	.....	.....	.....

For an array mapping:

List of Y coordinates for all sensors with respect to the dipole geometrical center

Sensor 1	Sensor 2	...	...	...	...	Sensor #n	
Y1 [mm]	Y2 [mm]						Y#n [mm]

Time [sec] stamp	Current [A] Main Coil	X[mm]	B1 [G]	B2 [G]	....	....	B#n [G]
.....	.....	.....	.....		....	....	.....
.....	.....	.....	.....		....	....	.....
.....	.....	.....	.....		....	....	.....
.....	.....	.....	.....		....	....	.....
.....	.....	.....	.....		....	....	.....
.....	.....	.....	.....		....	....	.....

Data should be presented in ASCI format with at least 6 significant digits.

MAGNET ASSEMBLY INSPECTION DATA SHEET

Manufacturer: _____ Serial No:_____

Magnet Assembly Drawing No: _____ Date:_____

Purchase Order No.: _____

4.6.1 Hydrostatic Test By: _____Date:_____[]passed [ ]failed

Interval (min)	Pressure (psig)	Temperature (F)
1		
15		
30		
45		
60		

4.6.2 Flow Test By: _____Date:_____ [ ]passed [ ]failed

Flow (US gpm)		Δ Pressure (psig)		Temperature (^oF)	

Coil Serial Number:_____ Coil Traveler Attached [ ]

Coil Serial Number:_____ Coil Traveler Attached [ ]

Coil Serial Number:_____ Coil Traveler Attached [ ]

Coil Serial Number:_____ Coil Traveler Attached [ ]

4.6.3 Magnet Ground Insulation Check By:_____Date:_____[ ]passed [ ]failed

4.6.4 Magnet D.C. Resistance By: _____Date:_____[ ]passed [ ]failed

Leakage Current @ 10 kVDC	micro amps	DC Resistance	Ohms	Temperature (^oF)	

4.6.5 Dimensional Compliance Check By:_____Date: _____[ ]passed [ ]failed

Notes:_____

4.6.6 Visual Inspection By:_____ Date: _____[ ]passed [ ]failed

Notes:_____

WATER COOLED COIL INSPECTION DATA SHEET (sheet 1 of 2)

Manufacturer: _____ Serial No:_____

Coil Drawing No: _____ Date:_____

Purchase Order No.:_____

4.4.1 Ball Test By:_____Date:_____ Ball Dia._____ [ ]passed [ ]failed

4.4.2 Leak Check (Either vacuum leak check or pressurized per specification).

[ ] Vacuum By:_____Date:_____ [ ]passed [ ]failed

[ ] Pressure By:_____Date:_____ [ ]passed [ ]failed

4.4.3 Hydrostatic Test By: _____Date:_____ [ ]passed [ ]failed

Interval (min)	Pressure (psig)	Temperature (F)
1		
15		
30		
45		
60		

4.4.4 Flow Test By: _____Date:_____ [ ]passed [ ]failed

Flow (US gpm)	
Pressure (psig)	
Temperature (F)	

COIL INSPECTION DATA SHEET (sheet 2 of 2)

Manufacturer: _____ Serial No:_____

Coil Drawing No.: _____ Date:_____

Purchase Order No.:_____

4.5.1 Ground Insulation Check By:_____Date:_____[ ]passed [ ]failed

Leakage Current @ 5000 Volts DC		microamps

4.5.2 Turn-to-Turn Insulation Check By:_____ Date: _____

1600 Volts peak-to-peak high frequency or 2000 volt impulse @ 1 to 5 microsecond rise time.

[ ] Scope Trace Attached [ ]passed [ ]failed

4.5.3 D.C. Resistance By: _____Date:_____[ ]passed [ ]failed

Coil Temperature (F):_____Resistance (Ohms):_____

4.5.4 Dimensional Compliance Check By:_____ Date: _____

[ ]passed [ ]failed Notes:_____

4.5.6 Visual Inspection By:_____ Date: _____

[ ]passed [ ]failed Notes:_____

Figure 2A - Ringing pattern for good coil.

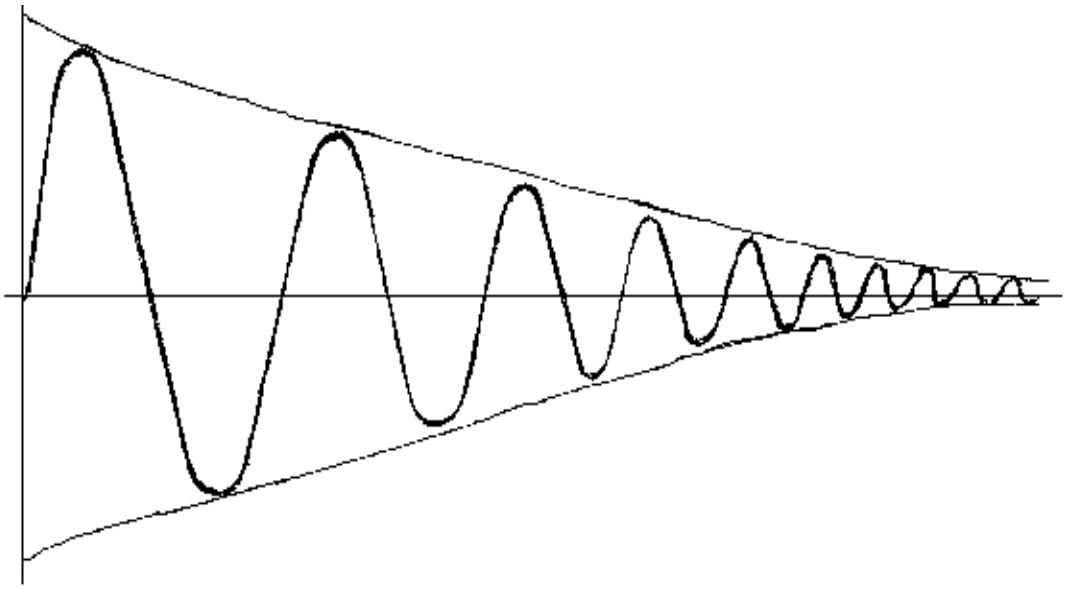
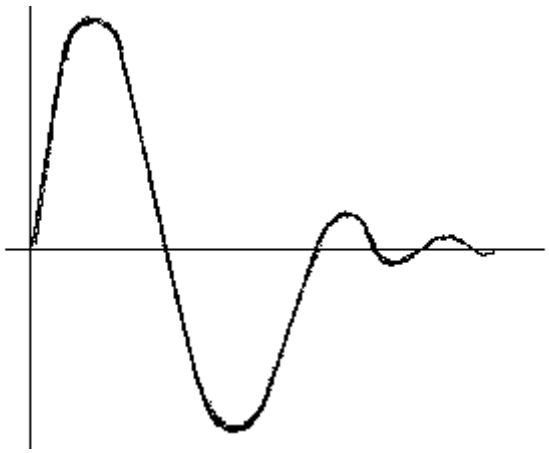
Figure 2B - Ringing pattern for bad coil.