EBIS Electron Collector Design Review

1.0 EBIS and Basic Geometry of EC

2.0 EC Specifications and Operating Parameters

3.0 Analysis Procedure for EC

- 3.1 Transient Thermal
- 3.2 Convective Heat Transfer in EC
- 3.3 Stress
- 3.4 Fatigue Strength
- 3.5 Materials of Construction

4.0 EC Manufacturing

1.0 EBIS and Basic Geometry of EC

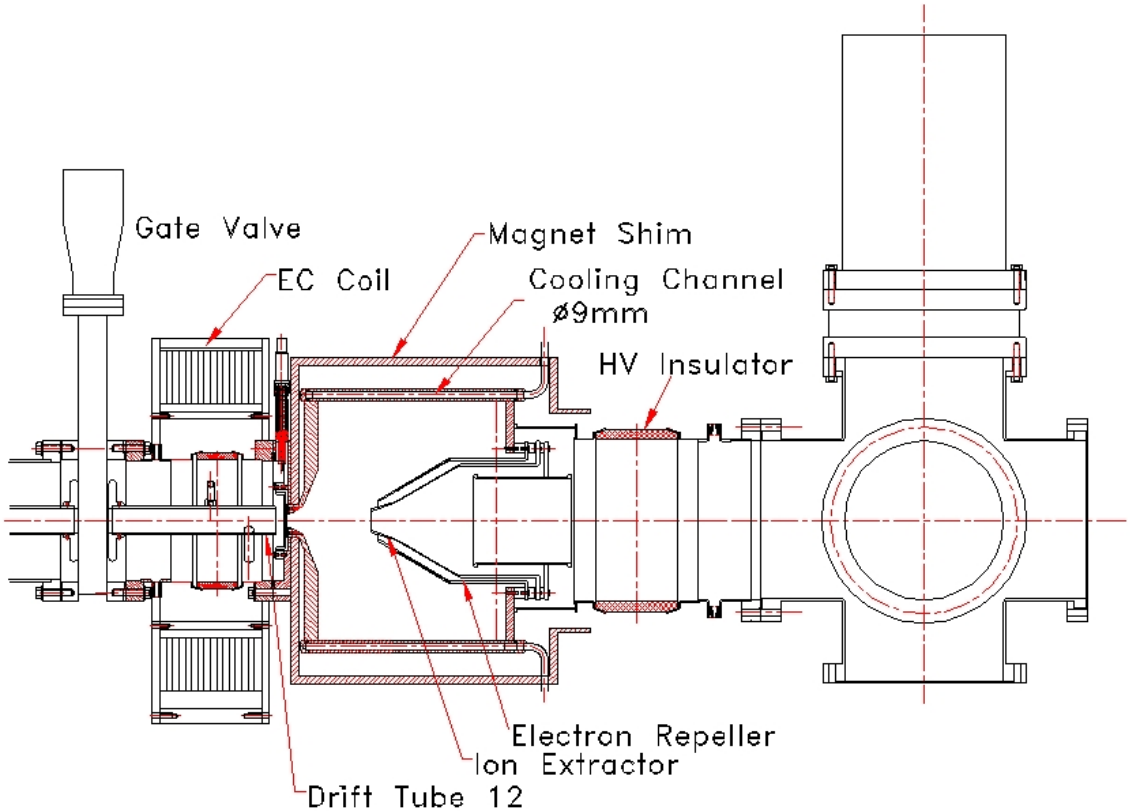

EBIS Electron Collector and Beam Line

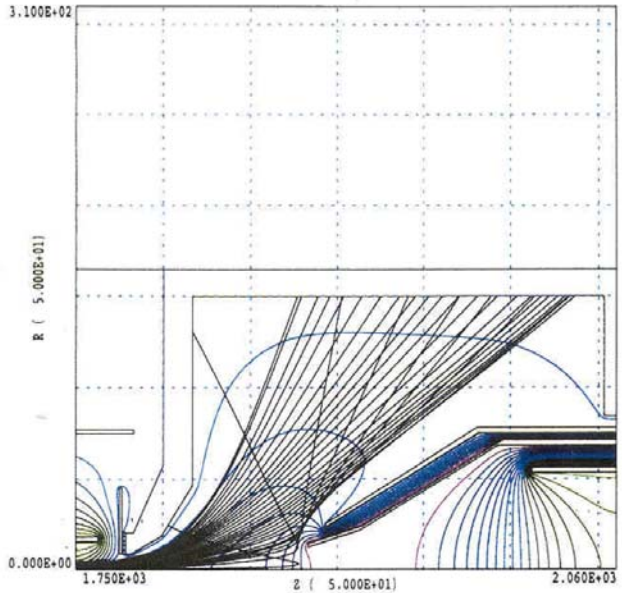

Electron Trajectories in EC

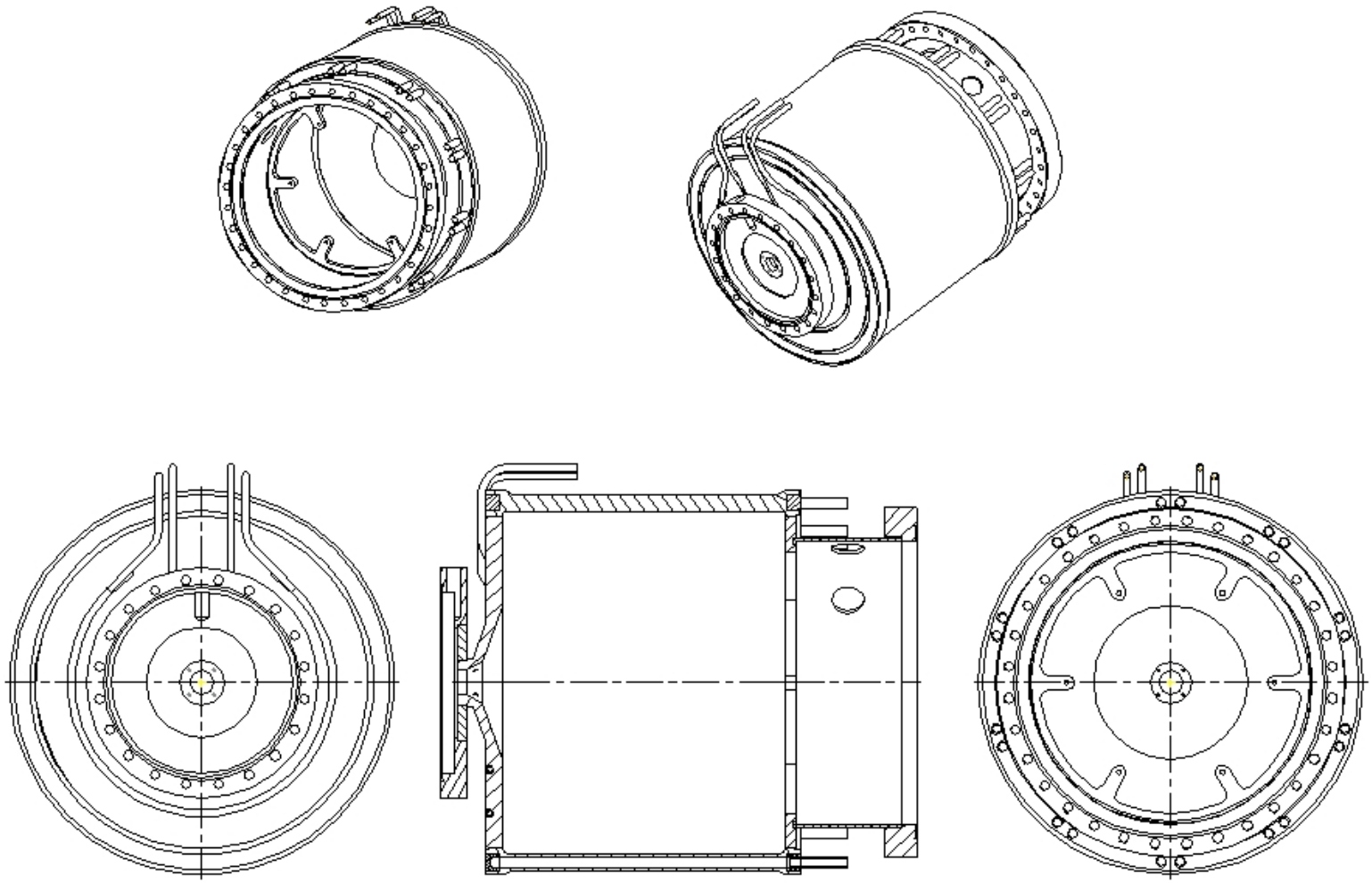

Electron Collector Assembly

2.0 EC Specifications and Operating Parameters:

Inside Diameter, mm (in)	300 (11.811)
Outside Diameter, mm (in)	330 (12.992)
Length of EC (approx), mm (in)	265 (10.433)
Cooling Channel Diameter, mm (in)	9 (.354)
Total Number of Flow Passes	60
Number of Cooling Flow Loops	10
Number of Flow Passes per Loop	6
Flow Rate per Loop, lpm (gpm)	15.1 (4)
Total Heat Load, kW, Max.	300
Pulse Parameters	5 hz, 30 mS pulse

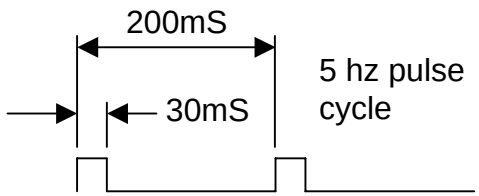

Operating Conditions (Continued):

		Condition
Pressure Drop for Each Flow Loop, psi	34	—
Cooling Water Temperature Rise, degC	22 4	DC Pulsed
Average Temperature Difference, Cu to Water, degC	95	DC
Average Heat Flux on EC Inside Diameter, watt/cm^2	187	DC
Ratio of Channel Heated Area to EC Inside Area	1.8	—
Average Heat Flux on Cooling Channel, watt/cm^2	104	DC

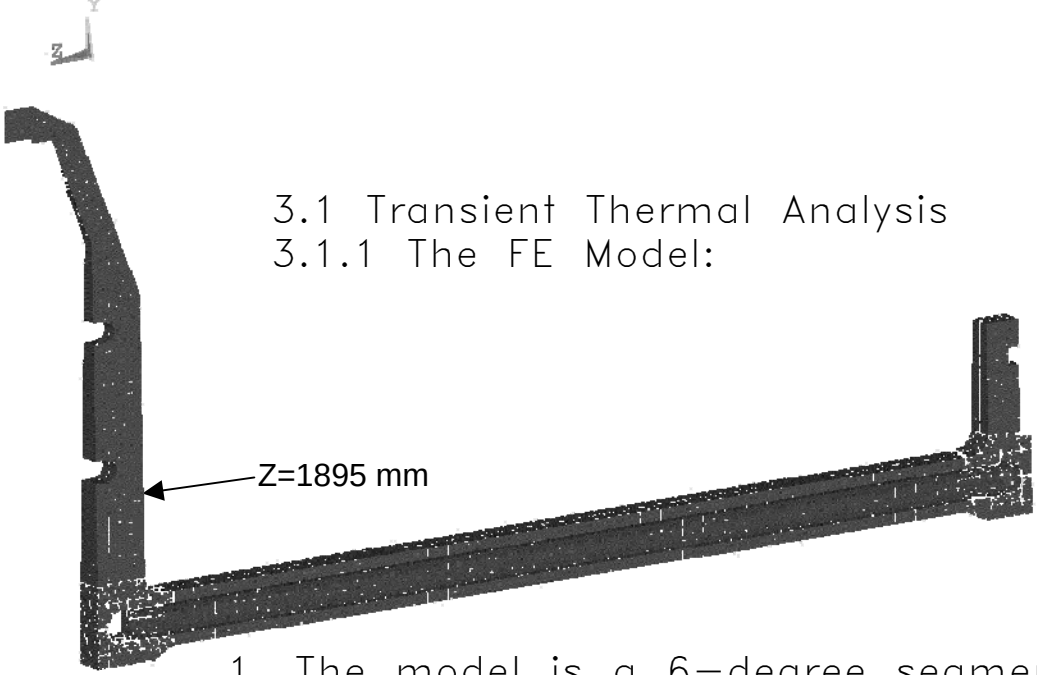

3.1 Transient Thermal Analysis

3.1.1 The FE Model:

1. The model is a 6-degree segment of the cylindrical EC with symmetry boundary conditions applied. The segment is centered on one of the 60 cooling channels.
2. Material: Beryllium Copper, C17510 special high purity grade

Density, kg/m3	8,830
Specific Heat, J/kg-C	419
Modulus, E, Pa	1.38e11
Poisson Ratio	.35
Coef of Exp, ppm/C	17.7
Conductivity, W/m-C	242 (62% IACS)
Yield Strength, ksi	80-100*
Ultimate Strength, ksi	100-130*
Fatigue Strength, ksi (10^8 cycles)	38-44*

*The above strengths represent the 'AT' temper, solution annealed, precipitation age hardened.

3. The inside diameter of the EC collector and the front disk face are heated by a 30mS, 5 hz pulsed electron beam. The heat flux power distribution on the inside cylindrical surface as a function of Z is shown below. The heat flux on the front disk face during the pulse is 5 kW, corresponding to 9.7 watts/cm^2.

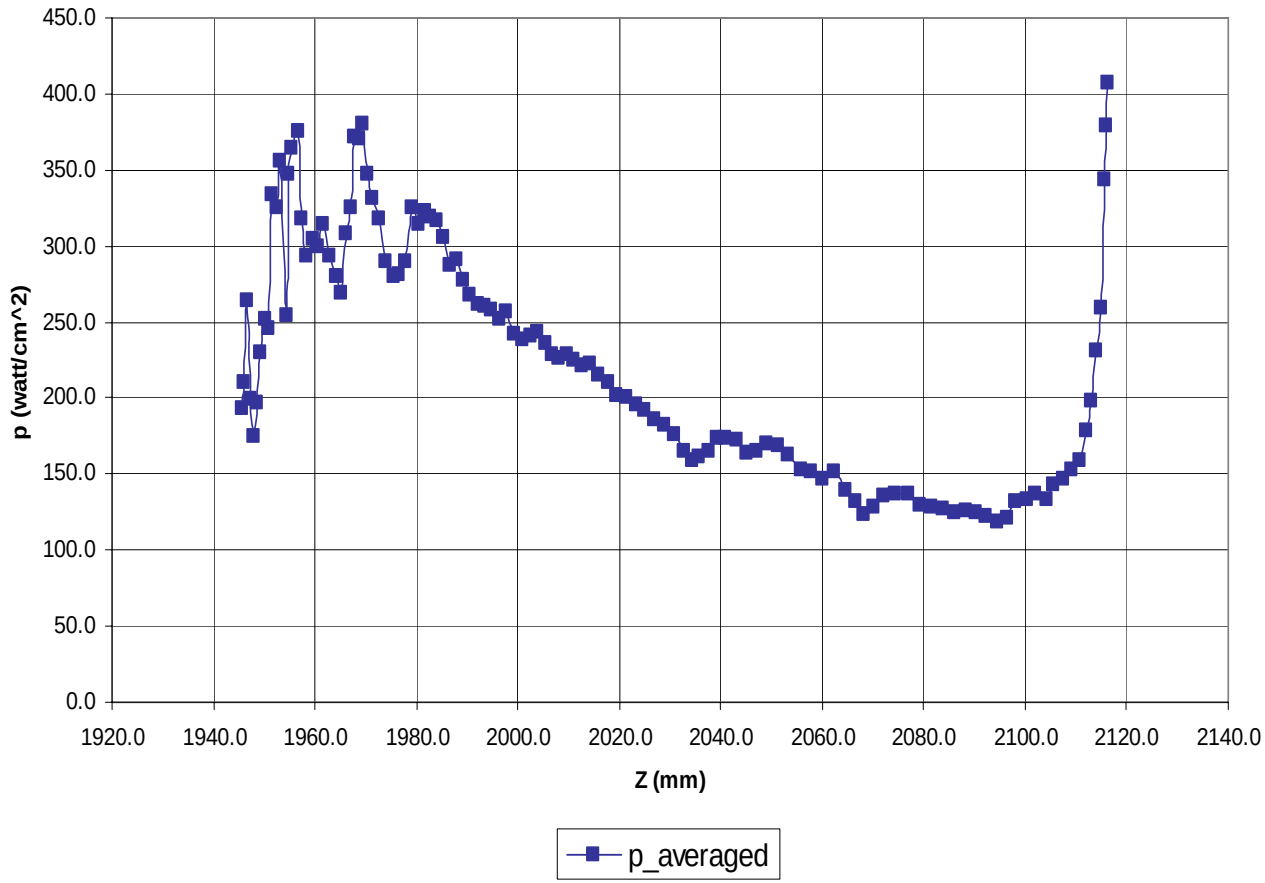

Thermal Load: 15kV, 20 Amp pulsed beam at 5 Hz, 30 mS on, 170 mS off

3.1.1. Thermal Response:

Heat Flux:

Max heat flux into water channel – 16 mS after end of pulse, watt/m^2

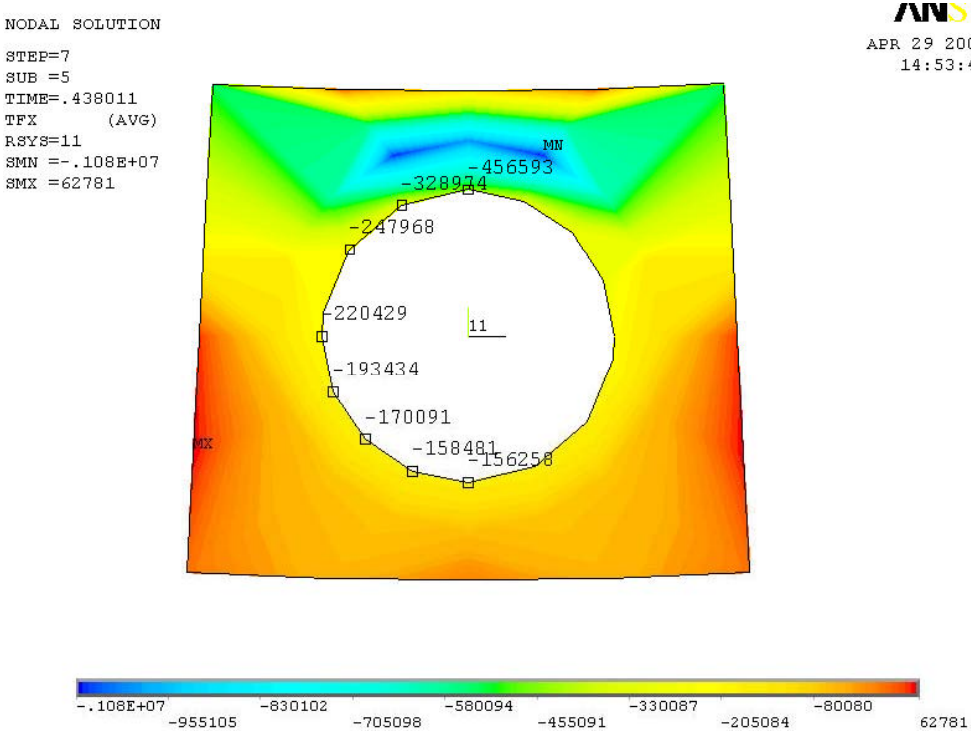

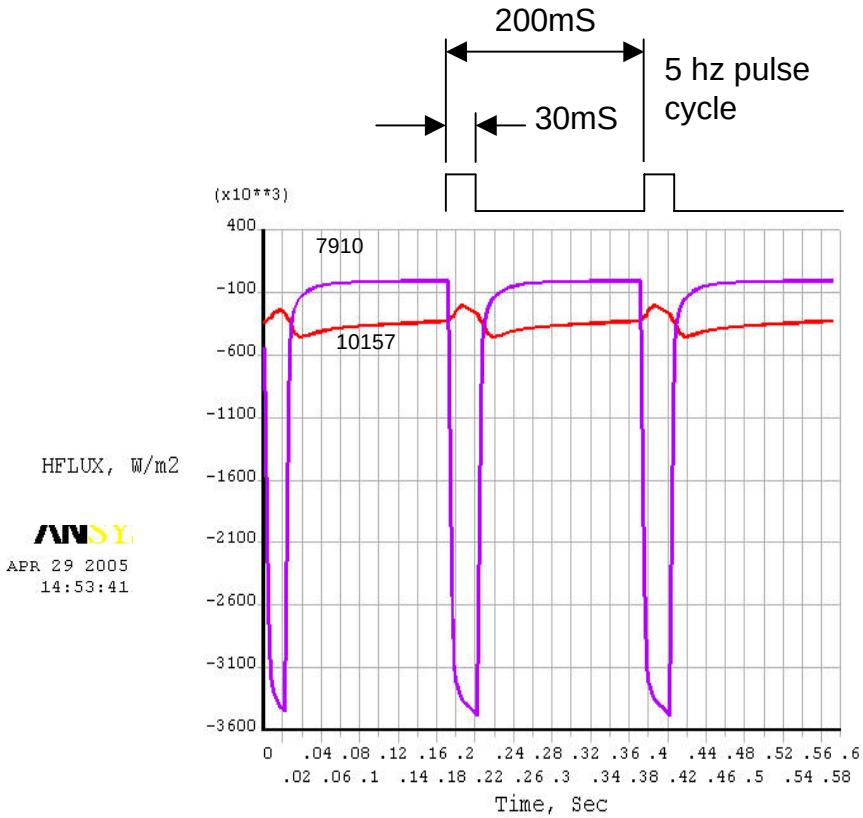

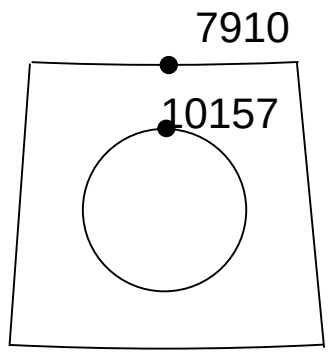

3.1.2 Thermal Response:

Temperature:

The temperature distribution of the EC at the end of the 30 mS pulse after LT cycling is shown below.

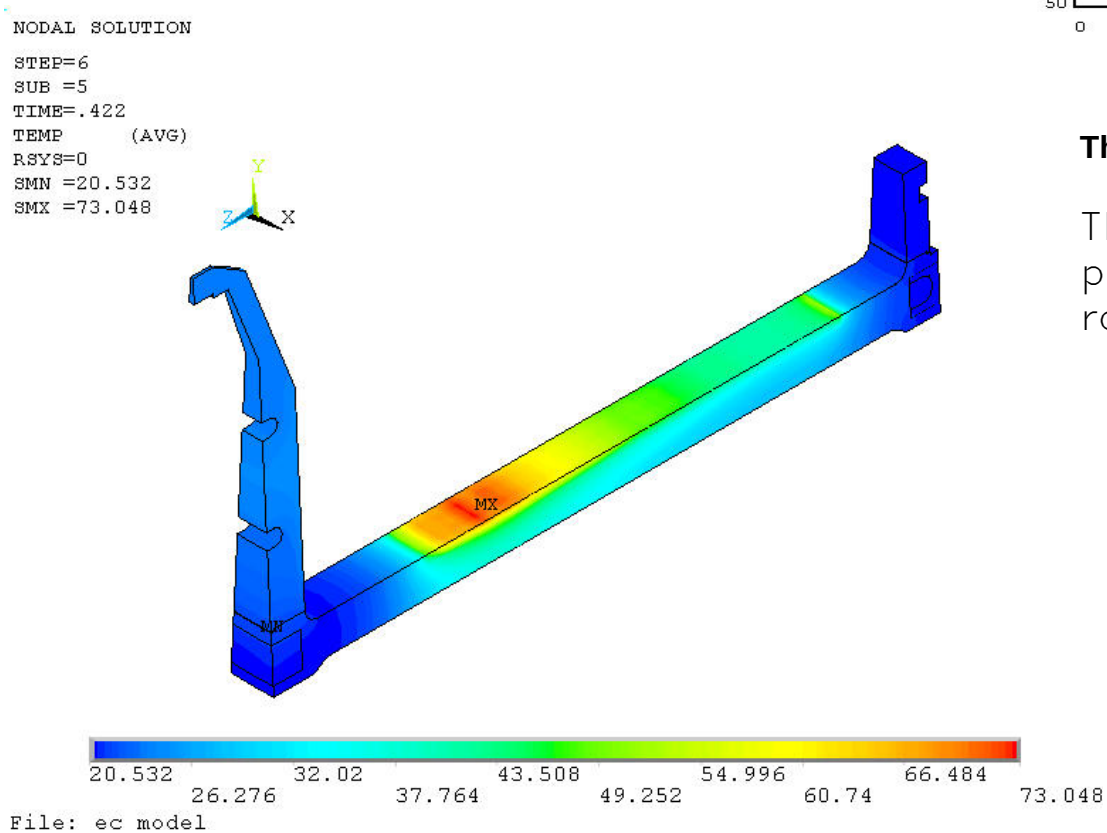

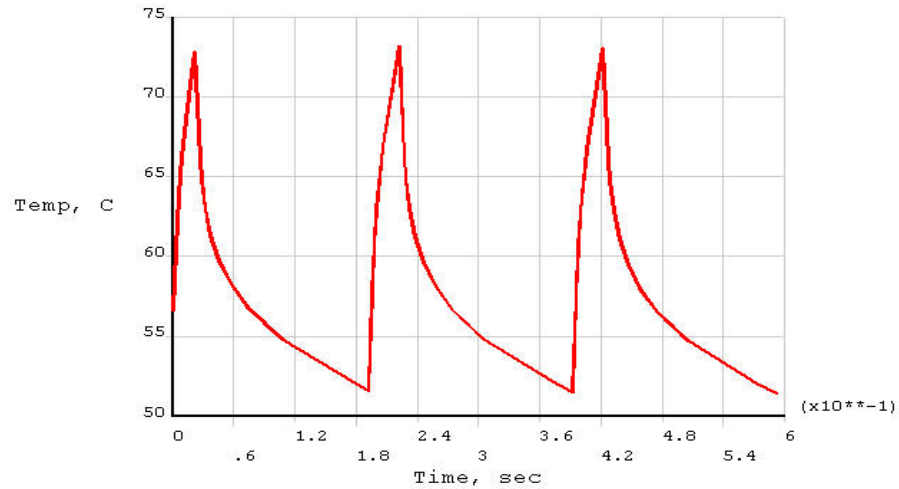

Thermal Response at Hottest Node (7910)

The temperature response plot, shows the temperature range between 52C and 73C.

3.2. Convective Heat Transfer In EC

3.2.1 Possible Modes of Convective Heat Transfer in EC:

- Conventional Single Phase Heat Convection (q=h*A*ΔT)

- Subcooled Boiling. Vapor bubbles start to form, grow, and collapse while attached to or sliding along the heated tube wall. The bulk property of the water is subcooled. The percentage of heat transfer by single phase heat convection diminishes, and stops at fully developed subcooled boiling.

- Critical Heat Flux, CHF (also referred to as DNB). At a very high heat flux, there is a severe drop in local heat transfer coefficient due to the replacement of water by vapor. Burn out and failure occur.

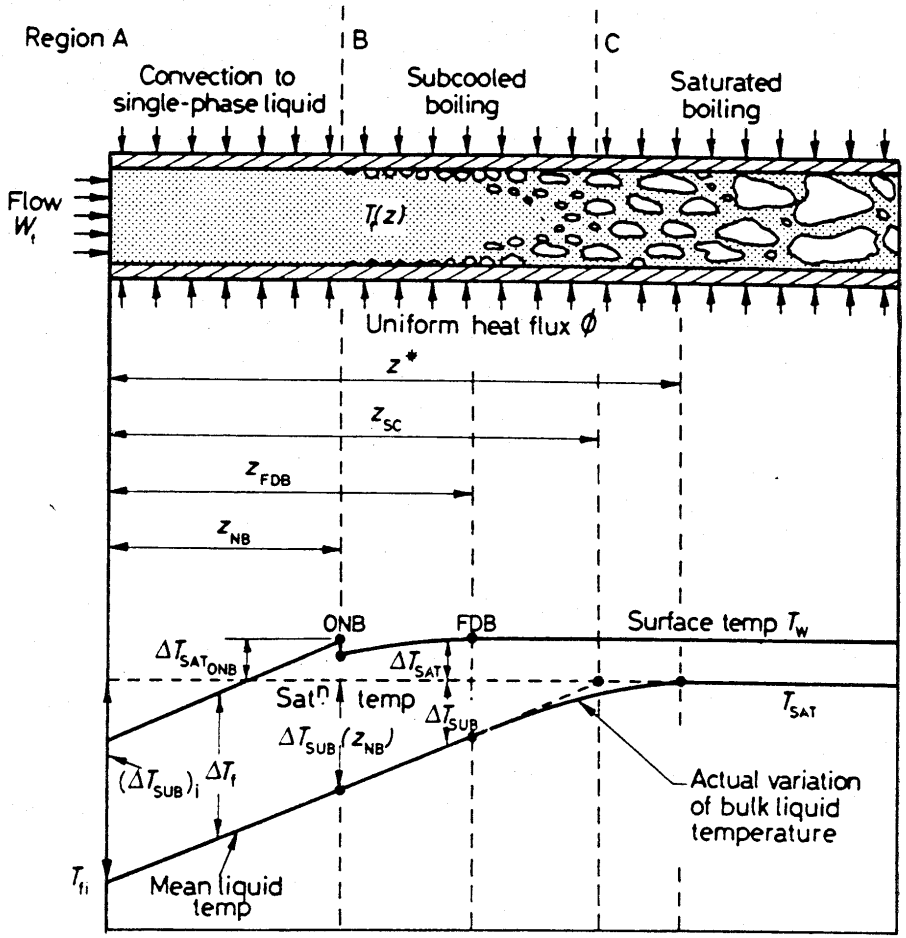

Fig. 5.1. Surface and liquid temperature distribution in subcooled boiling.

3.2.2 Temperature Profile of Water/Wall

The graph shows 3 plots: water temperature, the average wall temperature (i.e., as if the heat flux was uniform around the channel), and the wall temperature on the hot side.

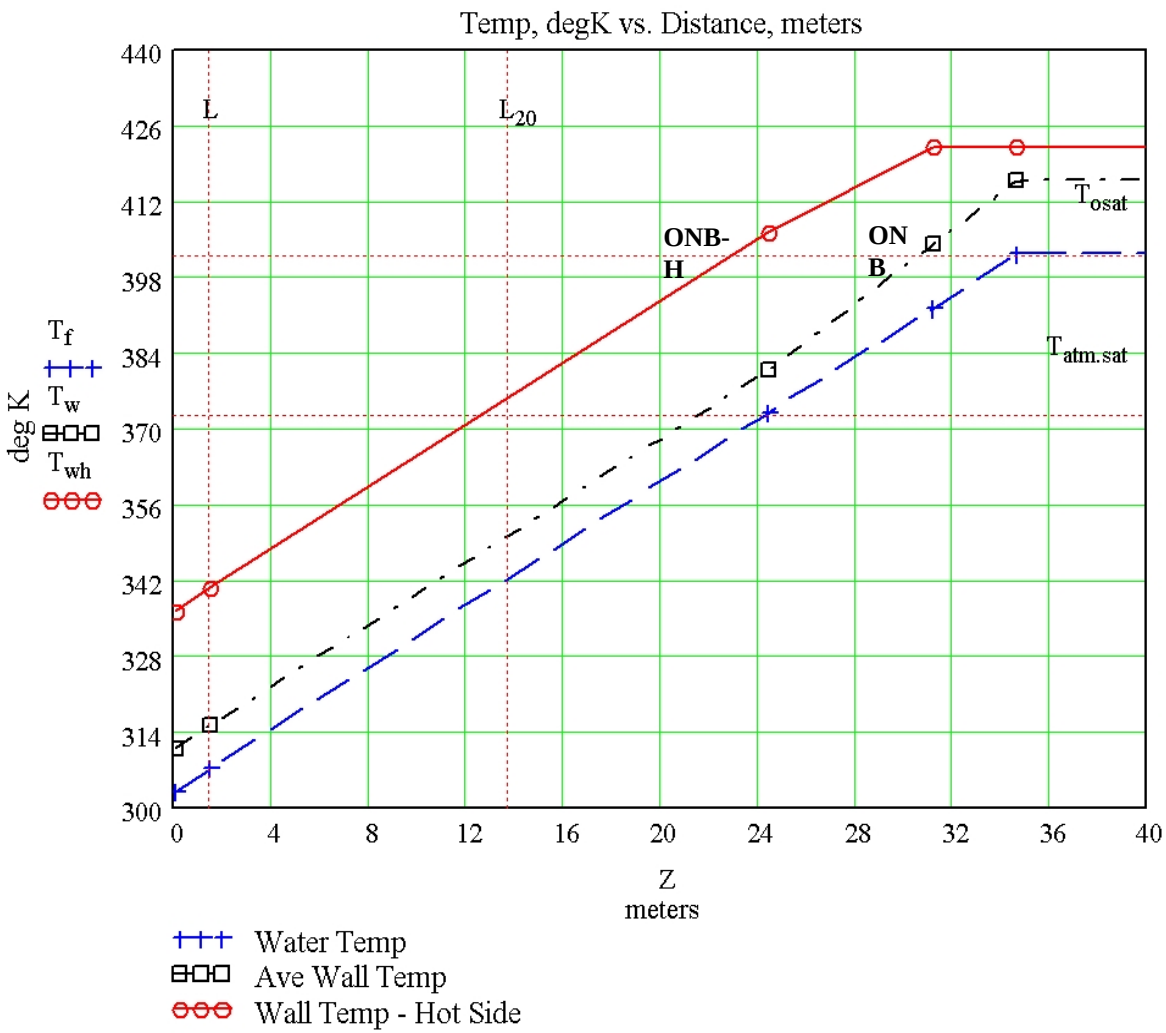

- The graph represents the steady state heat condition of 300 kW x 15% duty factor, not pulsed.
- Water enters the cooling channel at 30C, 122C subcooled below saturation temperature at 5 bar, and exits at 34C, 97C subcooled at 2.6 bar.
- The calculated heat transfer coefficient 'h' is 13,800 watts/m^2–C.

3.2.3 Summary of the Heat Transfer Calculations:

The inlet and outlet water conditions are highly subcooled and boiling does not occur in the 1.5m long flow channel of the EC.

ΔT_h water/wall = 33C max single phase convective heat transfer
ΔT_h water/wall = 19C max during subcooled boiling.

A possible benefit of operating with boiling is that the EC wall temperature stops increasing at the point where boiling starts, z_{onb} (onb—onset of nucleate boiling).

The heat transfer rate increases substantially during boiling. A reduction in the maximum temperature is an important factor in the minimization of stress levels causing material fatigue failure. However, during boiling the collector is closer to operating at the critical heat flux.

Critical Heat Flux (CHF):

The Bowring and Biasi Correlations were used to calculate the critical heat flux. Other research by Boyd shows a similar result.

Critical Heat Flux, N x 10^6 watts/m^2

Pressure, bar	Bowring	Biasi	Boyd
1	3.6	2.9	
2	4.4	3.5	
5	6.4	4.6	7.0
17	11.2	7.2	
20	12.1	7.5	

The maximum heat flux expected in the EC is about .46 x 10^6 watts/m2 resulting from the short 30mS pulse. There is a conservative margin compared to the CHF values above at a inlet water pressure of 5.0 bar and outlet of 2.6 bar.

3.3 Stress Analysis:

3.3.1 Mean Stresses and Stress Ranges at Start of Pulsing:

On the inside diameter the Von Mises stress here changes from about 5+/−5 ksi to 14+/−2 ksi in the first five cycles.

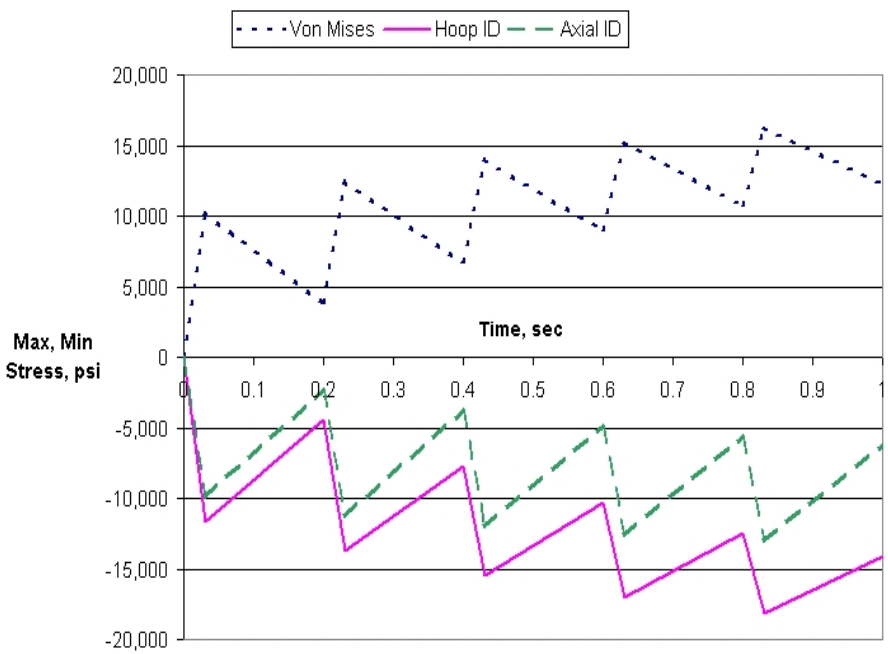

Maximum Stress on EC Inside Diameter

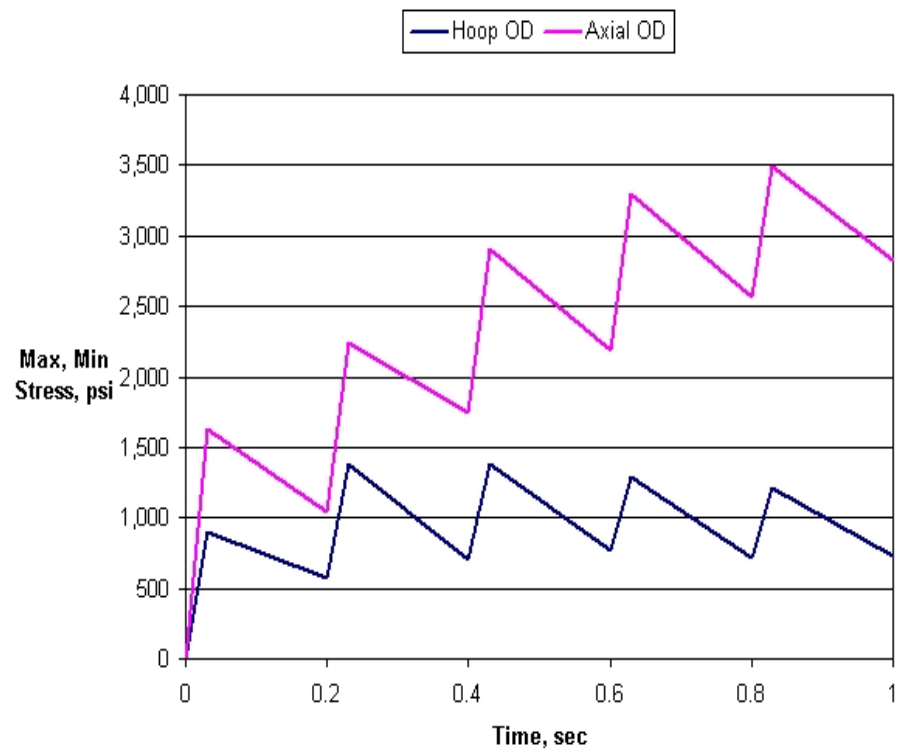

Maximum Stress on EC Outside Diameter

3.3.2 Mean Stresses and Stress Ranges at Steady Cycling:

The mean Von Mises stress at the maximum location (on ID) is 23.8 ksi with a stress amplitude of +/−.25ksi.

	Max. Stress Levels, ksi				
Load Step	Von Mises Stress	Hoop Stress		Axial (Z) Stress	
		Ten - O.D.	Comp - I.D.	Ten - O.D.	Comp - I.D.
End of Pulse	24.1	1.80	-27.4	4.73	-9.66
Start of Pulse	23.6	1.93	-27.3	5.58	-15.2

Note: Stress amplitude for hoop and Z−dir stresses less than +/− 3 ksi in all cases.

Stress Levels:

Von Mises Stress-End of 30 mS Pulse
(24.1 ksi max, dropping to 23.6 ksi)

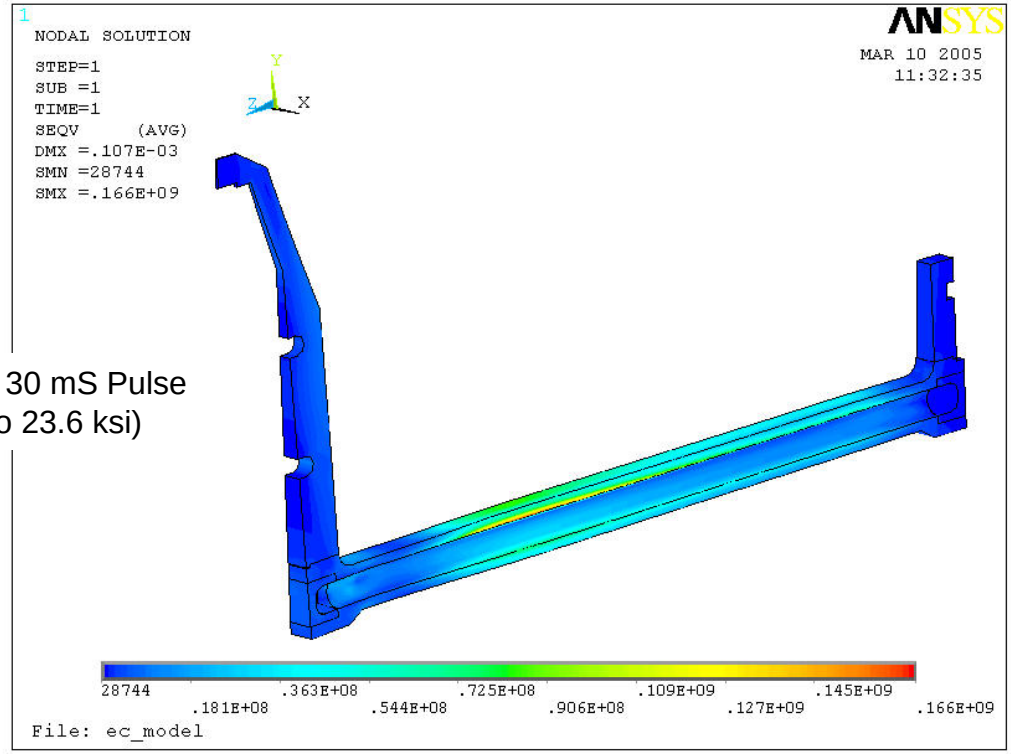

Hoop Stress-End of Pulse
(27.4 ksi I.D. compression,
dropping to 27.3 ksi)

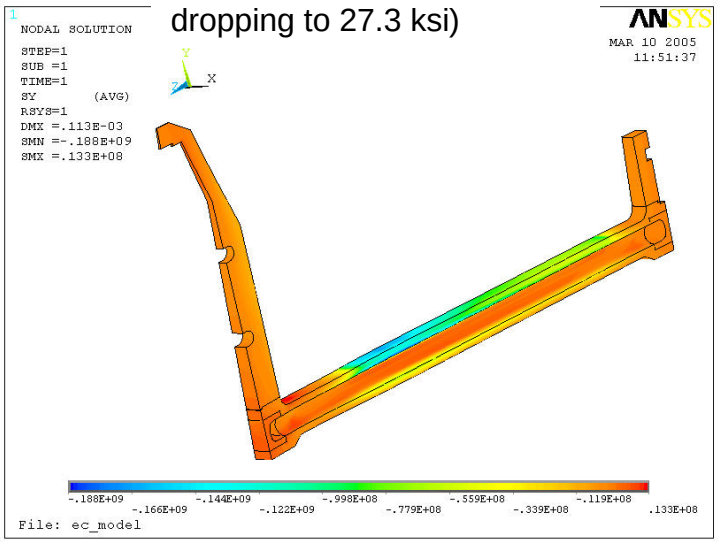

Axial Stress-End of Pulse
(9.66 ksi I.D. compression,
increasing to 15.2 ksi)

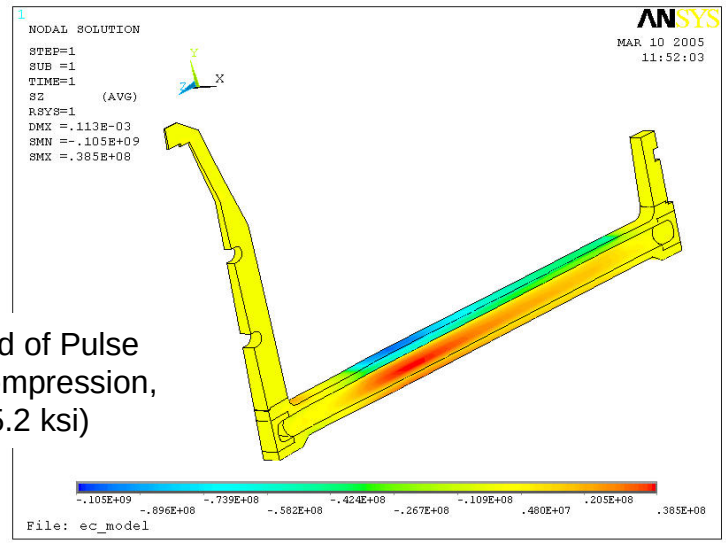

3.4 Fatigue Strength

Fatigue is a complex phenomenon resulting from microscopic crack propagation. Fatigue failures frequently result from normal material or manufacturing flaws. The calculation of fatigue life for the electron collector is an estimate for several reasons:

1. The documented fatigue strengths of materials are determined from cyclic axial tensile loading or reversed bending (rotating beam) fatigue tests, instead of thermal cycle loading.
2. Fatigue tests are performed under ideal conditions using carefully machined standard test specimens with polished surface finish.
3. Fatigue tests provide fatigue strength data based on fully reversed load cycles with a mean stress of zero. For non-zero mean stress the fatigue life is estimated by extrapolation methods, such as the Modified Goodman Diagram below.

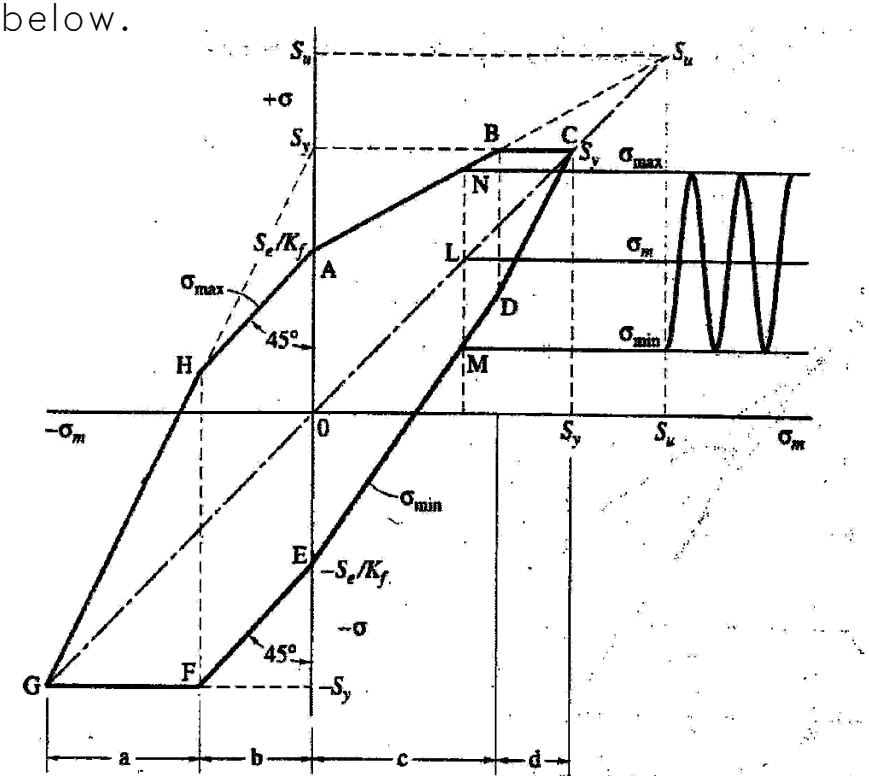

Figure 7.10 Complete modified Goodman diagram, plotting stress as ordinate and mean stress as abscissa.

Note: The EC will be constructed of a copper alloy material. Copper alloys do not have a defined endurance limit (i.e., stress level below which fatigue failure will never happen).

The procedure for evaluating fatigue life of the electron collector includes the following steps:

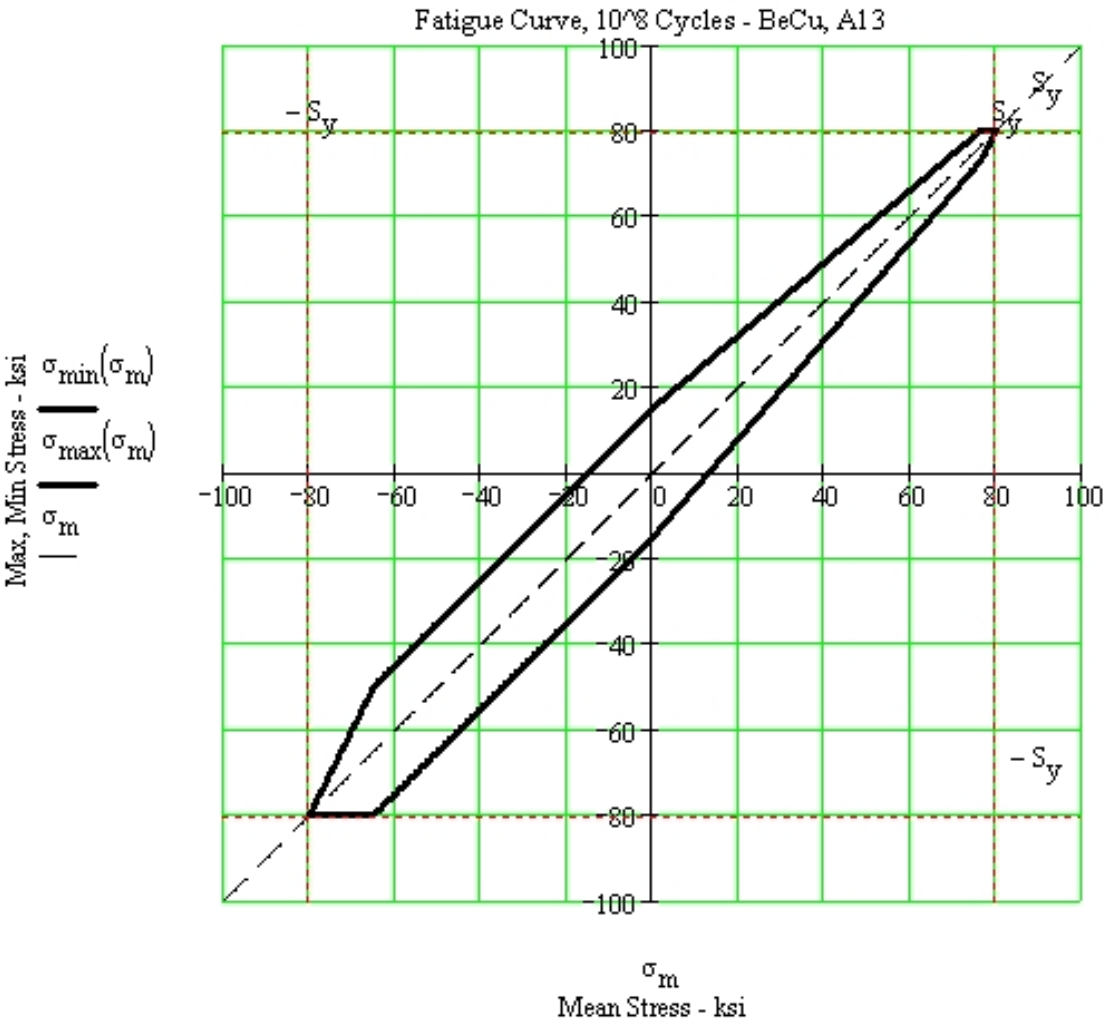

1. Obtain published fatigue strength of alloys that can be used in EC.

2. Calculate 'modified fatigue strength' to adjust the fatigue strength obtained above (idealized conditions) to reflect actual conditions. This takes into account the actual operating temp, actual surface finish of the part, size of the part, and confidence level in the result.

3. Develop the Modified Goodman Diagram to determine fatigue strength at non-zero mean stress conditions.

Conclusion: A comparison of the expected stress levels (23.8 +/- .3 ksi) to the allowable stress range determined from the Modified Goodman Diagram shows that beryllium copper will be adequate for 10^8 load cycles. Stress ranges occurring during the start of pulsing are within envelope.

3.5 EBIS Materials of Construction

The materials considered for construction correspond to those evaluated in Reference (a), and included the following:

C17510	Beryllium Copper	Brush Wellman
C18150	Zirconium Chromium Copper	Scot Forge
C15715	Glidcop Dispersion	North American
	Strengthened Copper, AL-15	Hoganas- SCM Metal Products, Inc.

Material properties have been estimated by the above manufacturers for the tube form to be produced for the EC, and are as follows:

	C17510	C18150	C15715	C10200
Material	BeCu	ZrCrCu	glidcop	OFHC
Density, kg/m^3	8830	8900	8900	8950
Modulus of Elasticity, $x10^6$ psi	20	17.4	19.4	17.0
Conductivity, W/m-C	189 (IACS48)	315	354	393
Coefficient of Expansion, ppm/C	17.7	17.1	16.6	17.6
Yield Strength, ksi	80	48	40	10.5
Tensile Strength, ksi	100	57	52	32
Fatigue Strength, ksi (10^8cycles)	38-44	-	-	-

A comparison of the temperature response of the EC during 10hz, 50mS pulse conditions, and the resulting stresses for the three materials follows:

Material	C17510 BeCu	C18150 ZrCrCu	C15715 glidcop
Temperature Range, degC, Upstream*	131–151	119–136	114–131
Temperature Range, degC, Downstream*	101–146	91–127	87–121
Stresses:			
Von Mises	40.2	34.7	32.3
Hoop, Max Tension	+28.4	+23.9	+22.2
Max Compression	−47.1	−40.6	−38.0
Axial, Max Tension	+20.3	+17.0	+15.5
Max Compression	−29.7	−25.1	−23.2
Stress Ratio, Yield/VM Stress	1.99	1.38	1.24

*at the maximum temperature locations

Conclusion

Beryllium copper provides the highest margin between the resulting Von Mises stress and the yield stress (see Stress Ratio), then Zirconium Chromium Copper, followed by gildcop. A comparison using fatigue strength is not possible, since published values could not be found for ZrCrCu and glidcop. The beryllium copper has published values of 38–44 ksi for fatigue strength, although Brush Wellman will not guarantee these values.

Other Factors:

1. Manufacturing Methods. The BeCu parts of the EC will be joined by electron beam welding instead of furnace brazing. Both BeCu and ZrCrCu lose strength if exposed to high temperatures, such as those encountered in the furnace brazing process brazing. Glidcop has the advantage of retaining its strength when exposed to high temperatures

2. Cost. The unit costs for the manufacture of the raw, unmachined EC cylinder, based on producing 2 units at the same time, are:

Material	Estimated Cost
Glidcop	$20,000
ZrCrCu	$3,000
BeCu – Std	$3,800
BeCu – Hycon	$7,800

Summary

Fatigue (BeCu,10^8 cycles):

Maximum Allowable Stress Amplitude, psi:	
In Tension, up to 40,000 psi	+/-9000
In Compression, up to –60,000 psi	+/-15,000

Stress

Yield Stress, psi	80,000
Actual Maximum VM Stress	23,800 +/-250

Critical Heat Flux:

Calculated CHF at 2 bar, watts/m^2	3.5 (Biasi)
Actual Heat Flux on EC ID, watts/m^2	3.6 – 4.1
Actual Heat Flux at Water Channel, watts/m2	.46

Pressure:

Max Operating Pressure, bar	20

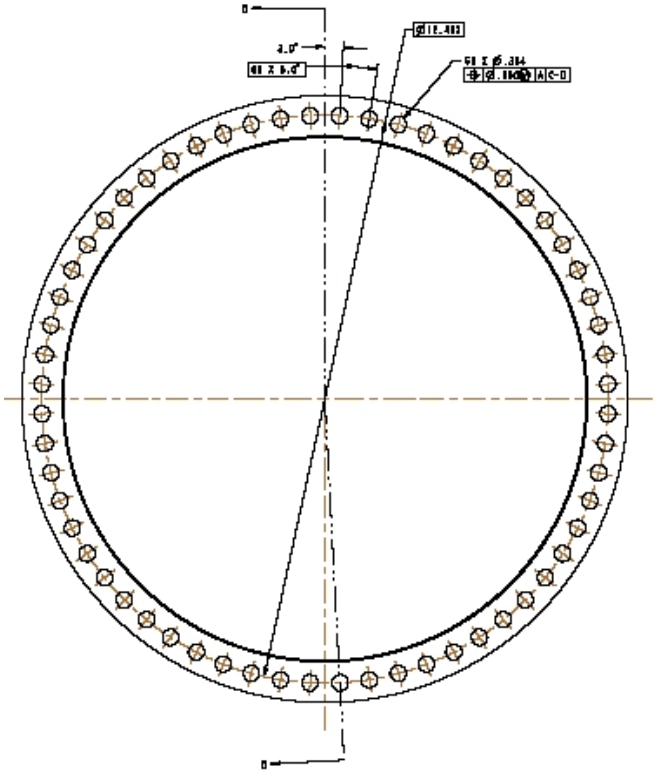

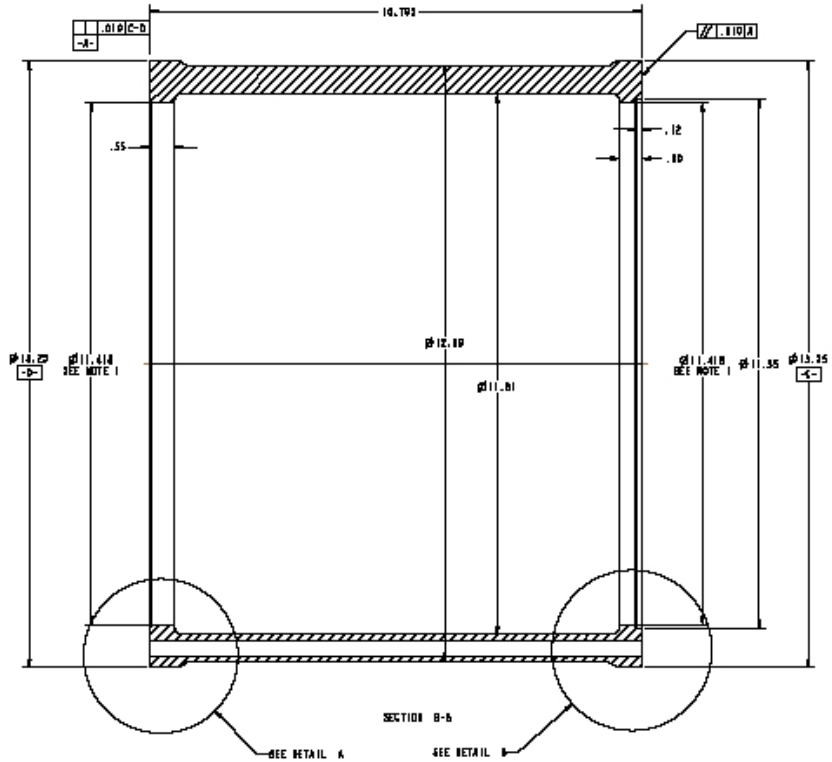

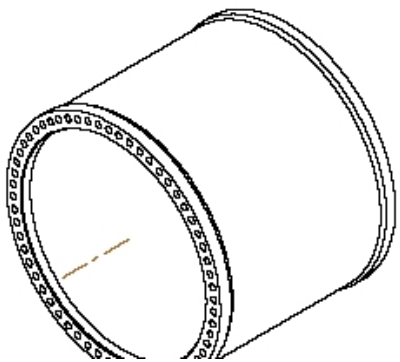

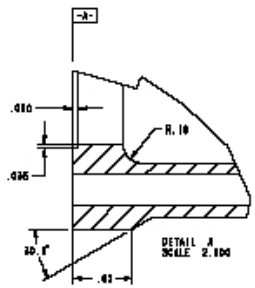

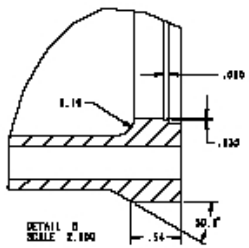

Electron Collector Cylinder

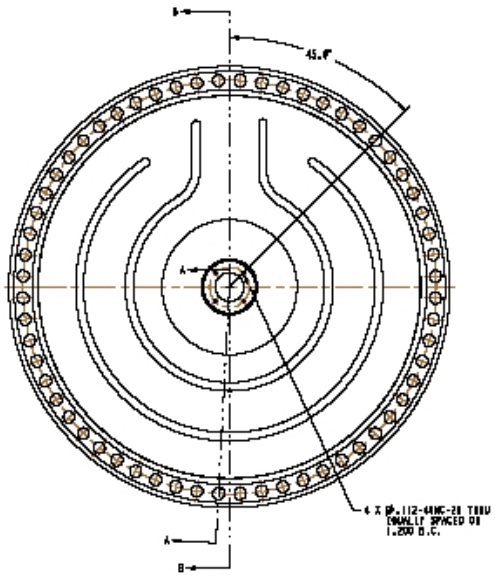

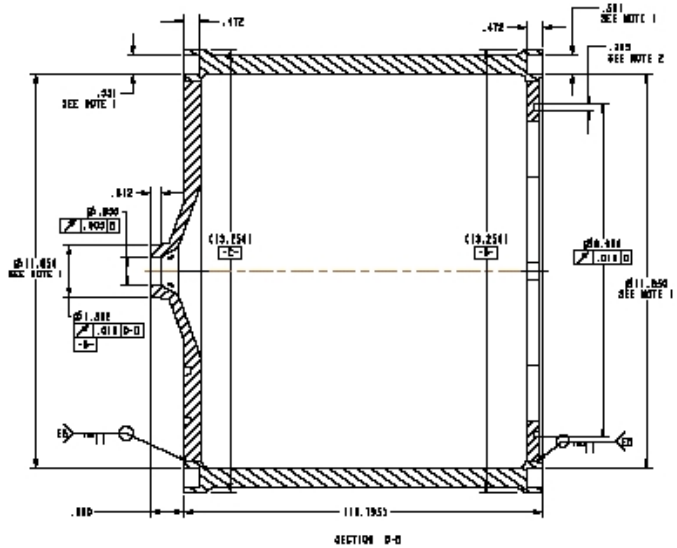

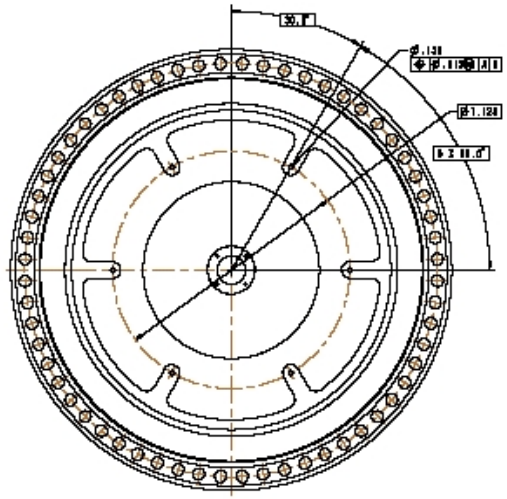

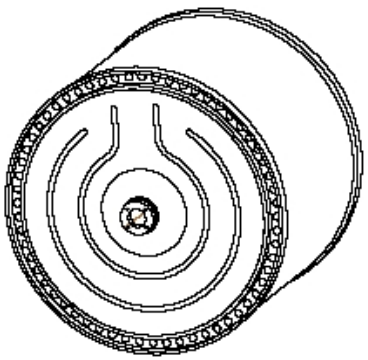

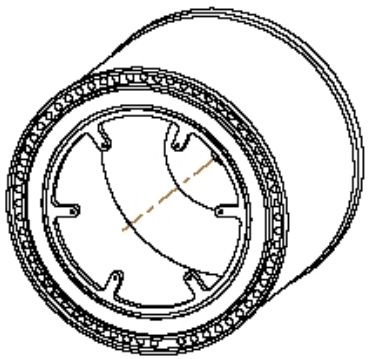

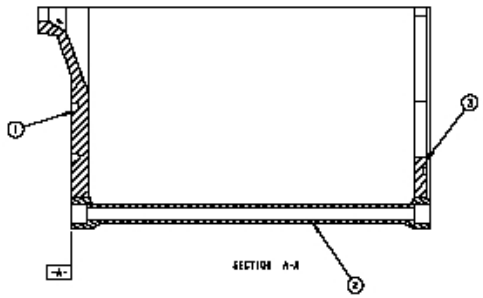

1. DIAMETRAL CLEARANCE BETWEEN CHANNEL GROOVE AND MATING CHANNEL RINGS, P/N'S 3 AND 8, TO BE .001" TO .004"
2. DIAMETRAL CLEARANCE BETWEEN TUBE GROOVE AND MATING TUBE, P/N 8, TO BE .001" TO .005"

Electron Collector – End Plates, EB Welded

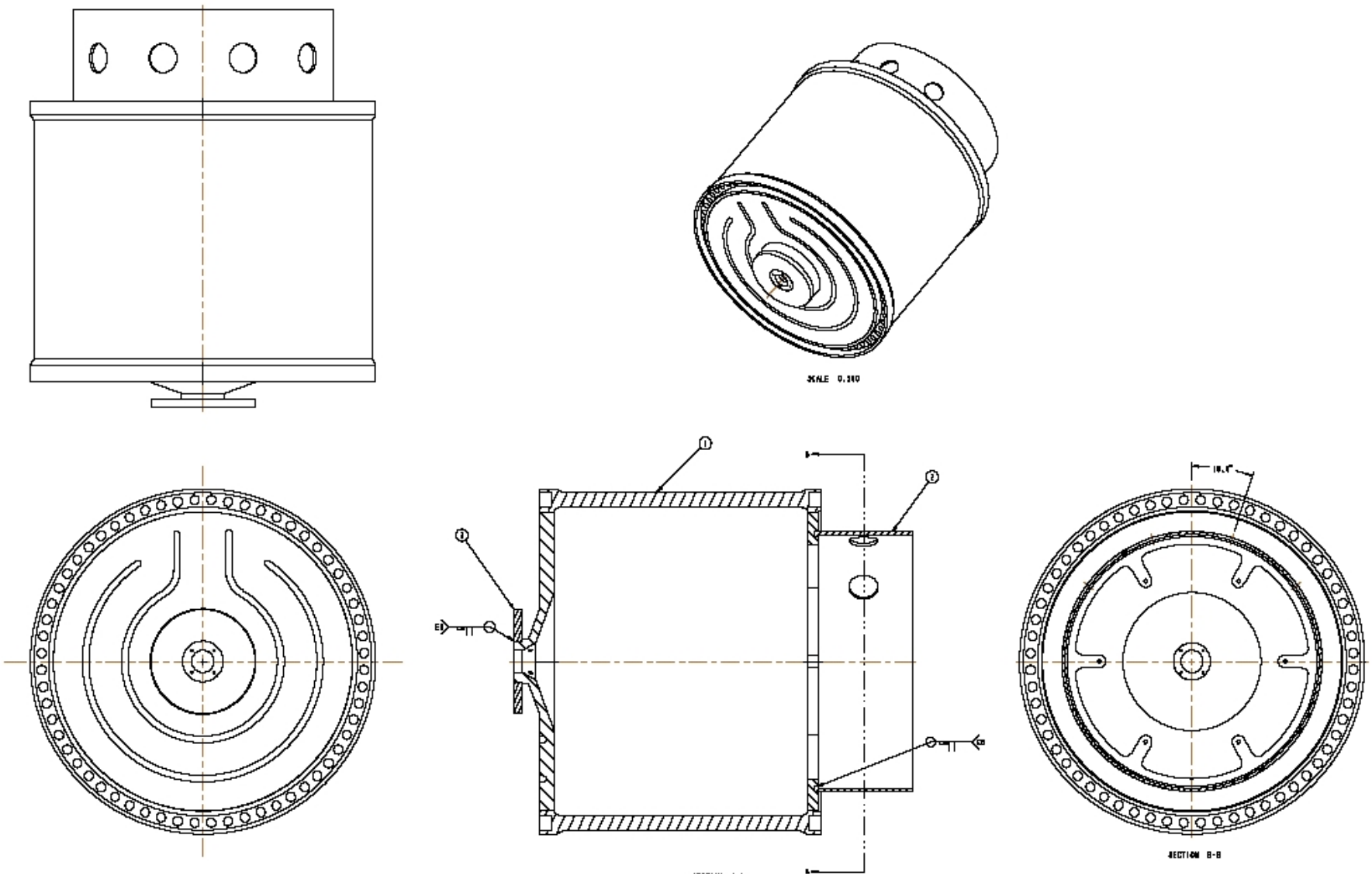

Electron Collector, BeCu–to–Stainless EB Welding
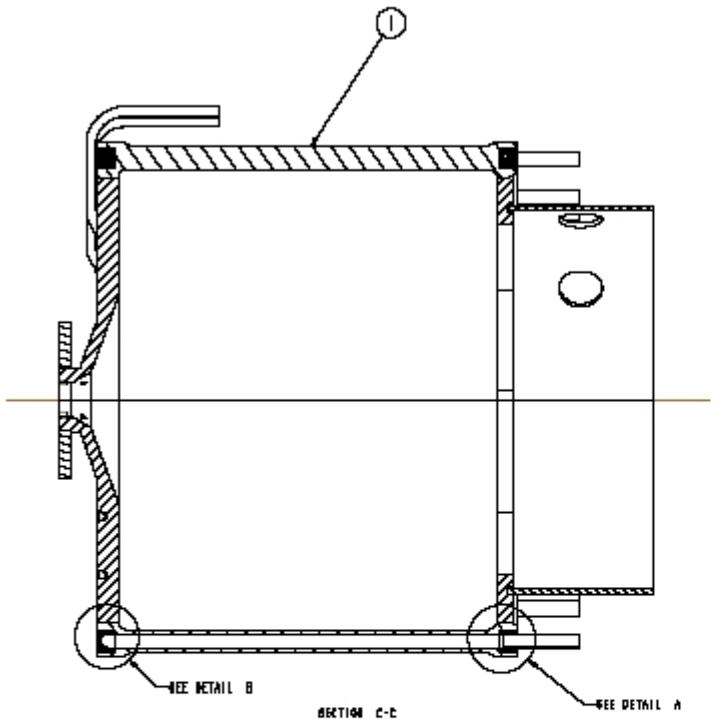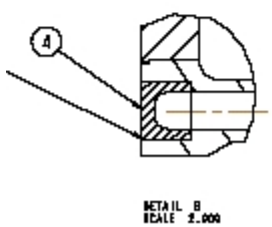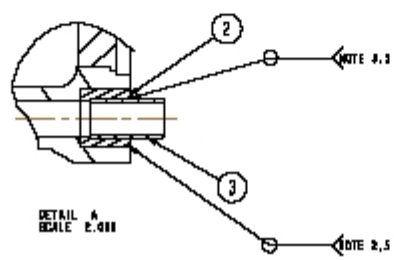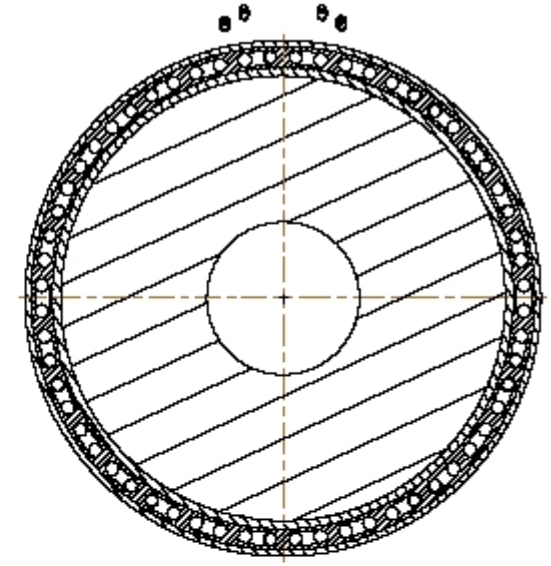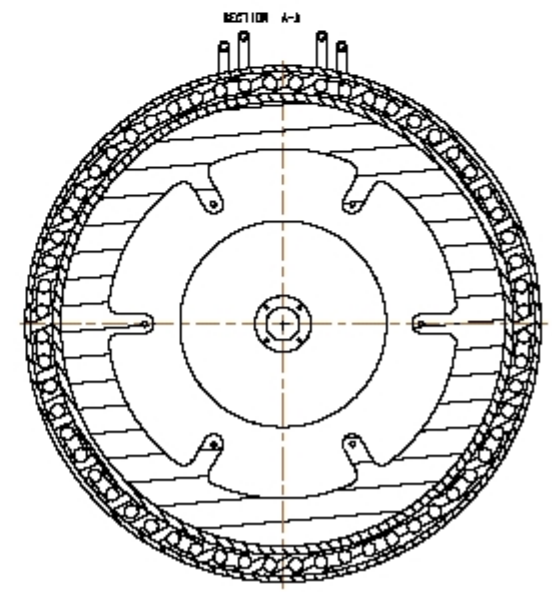
Electron Collector, Solder Tubes and Channel Rings
(Min Melt Temp 340C, Max 500C)