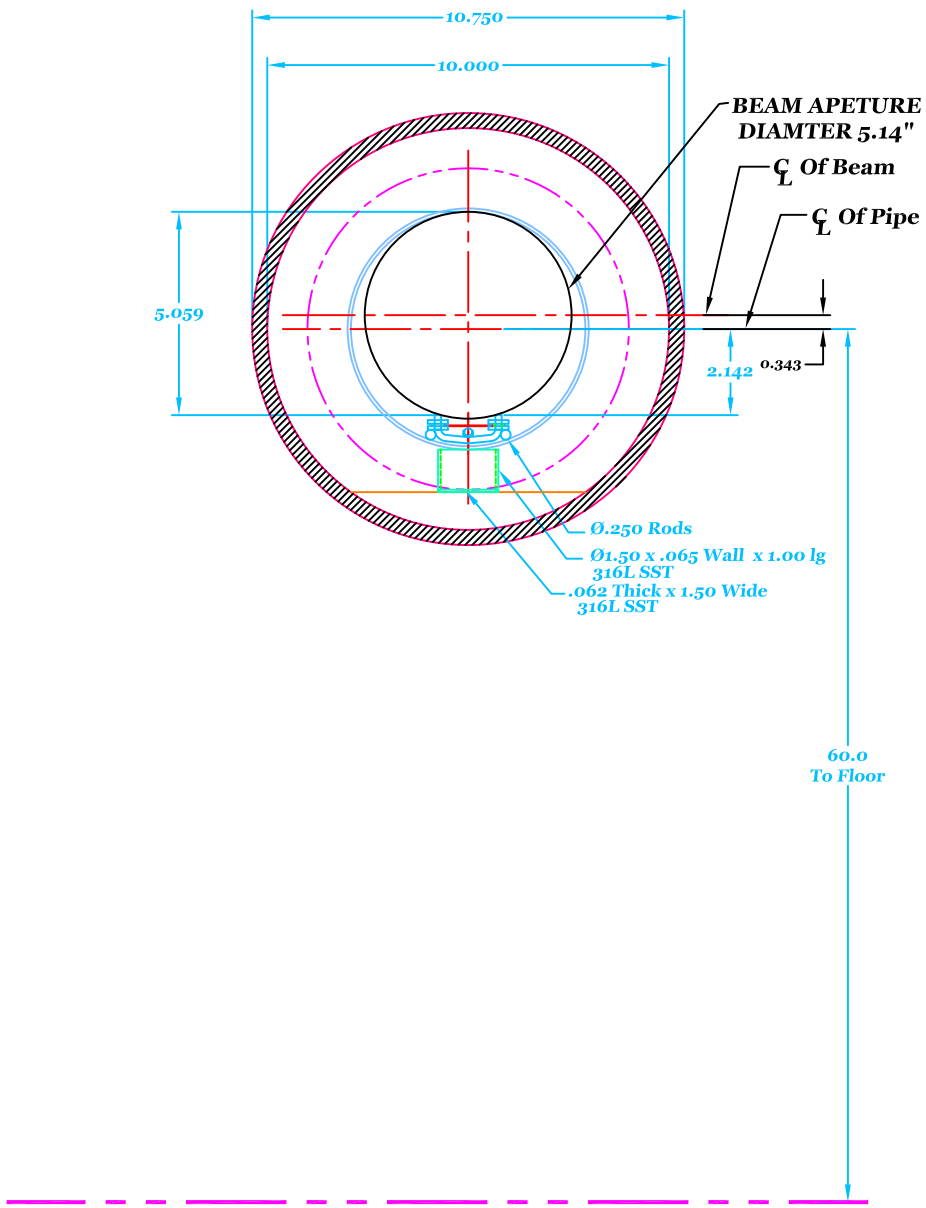NEG PIPE IN INSTALLATION IN PENETRATION PIPE