Power Requirements for EBIS Dipoles
Bob Lambiase
March 9, 2006

Overview

Given the requirements for the two main dipoles for EBIS, the power supply can be defined. This note describes those requirements for a series connection of two dipoles.

Magnet Parameters

From John Ritter on 3/3/06, we have:

30 Turn Coil
26.5mm square conductor with 13.5mm cooling hole
Operational Current: 2700 A
Inductance: 0.0195 Henry
Resistance: 0.009 Ohm/magnet

Current Wave Shape

The power supply will be designed to either stay at one level continuously or go directly between two levels. It can stay at either of those two levels for as long as desired, but there will always be at least one second available to change levels.

In this example, the current is at 3,000 Amps for four pulses at 5 Hz., and at 300 Amps for a single pulse.

Bandwidth and Slew Rate

The control input is expected to step between two levels. This waveform will be slew rate limited, internal to the power supply, to 4 kA/sec. That would make a transition from 300A to 3, 000A take 0.675 seconds.

The current loop bandwidth used in this example is 10 Hz. This bandwidth is compatible with an accuracy of one part in 10^4, which represents 0.3A out of 3,000A. This accuracy can also be accomplished with a 5 Hz bandwidth, but not very much lower.

The Circuit

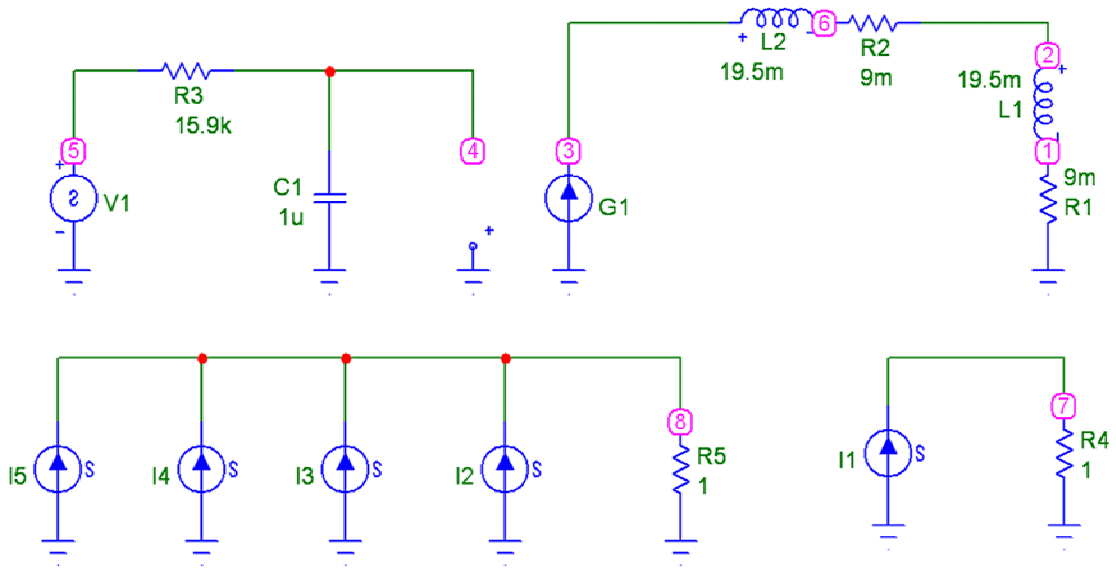

V1 is the control source with slew limiting already included. This is followed by a filter with a single pole roll off at 10 Hz, simulating the bandwidth of the current loop. G1 provides the power supply output current. Two magnets are in series.

The five current sources at the bottom of the schematic are just used to make markers representing when the beam is present.

The Results

The waveforms are shown on the next page.

The top waveform is the current into the magnets. A maximum value slightly over 10% was used.

The middle waveforms represent the voltage on the high side of each magnet. This tells us that the first magnet will see just over 200 Volts with respect to ground, and that the power supply will need to be rated at about 250 Volts.

The third curve shows the error from the reference in a ± 0.3 Amp (one part in 10^4) window. Markers for the beam are shown as well. The error must be within the window before the beam appears. This does happen for the 10 Hz. bandwidth of this example. That 10 Hz bandwidth is within the capability of even a simple twelve pulse phase controlled power supply.

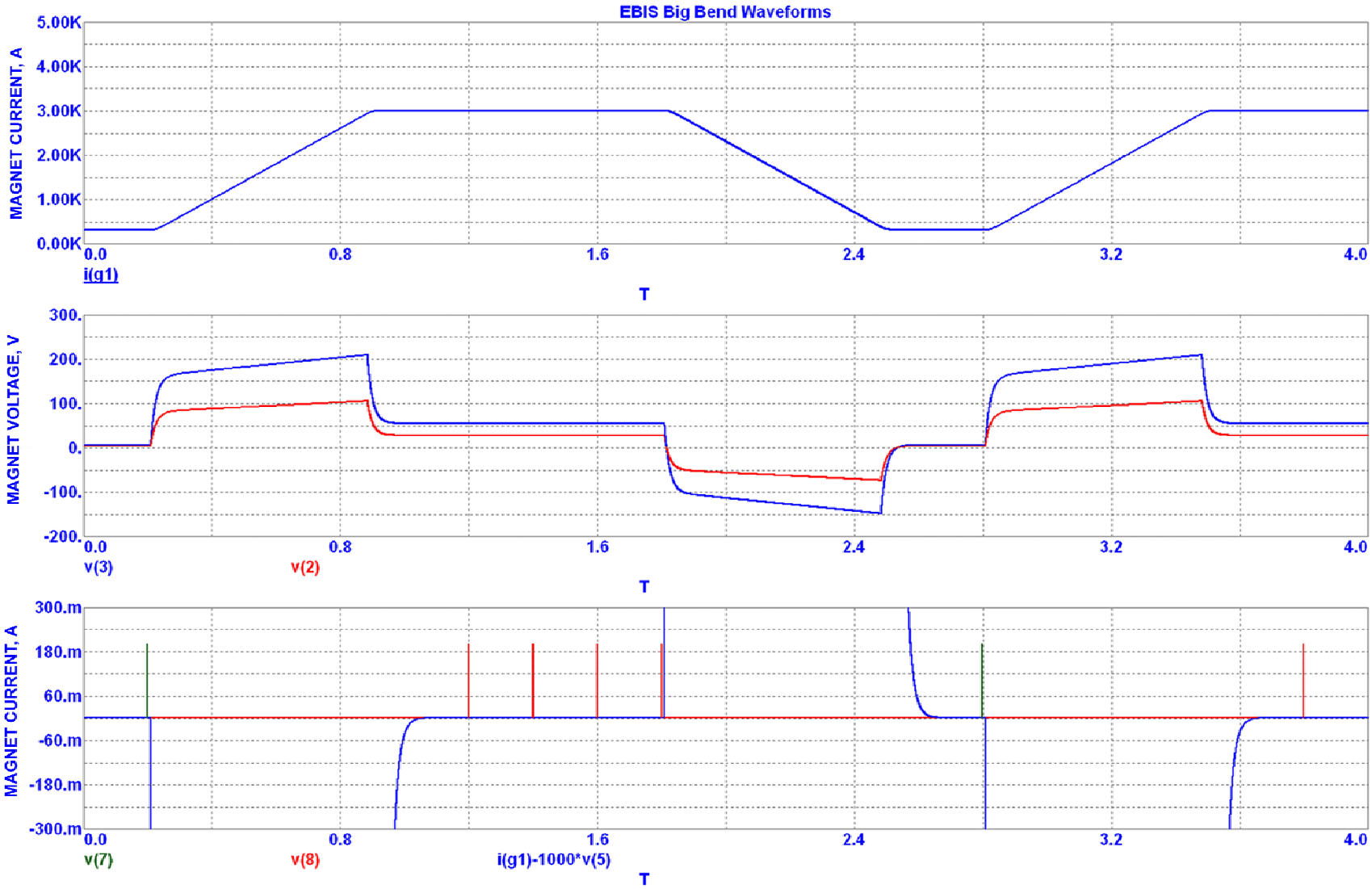
EBIS Big Bend Waveforms
MAGNET CURRENT, A
5.00K
4.00K
3.00K
2.00K
1.00K
0.00K
0.0
0.8
1.6
2.4
3.2
4.0
i(g1)
T
MAGNET VOLTAGE, V
300.
200.
100.
0.
-100.
-200.
v(3)
v(2)
MAGNET CURRENT, A
300.m
180.m
60.m
-60.m
-180.m
-300.m
v(7)
v(8)
i(g1)-1000*v(5)