# Emittance of Hollow Cathode Ion Source beams

E. Beebe 2006-01-31

A hollow cathode source has been used to inject the primary 1+ ions into the TestEBIS. For many species, currents >10 μA can be produced which allows seeding of the EBIS in times less than 400μs. It is more usual use a slower injection mode, lasting typically 3-4 msec, which requires currents of only a few μA. Emittance measurements have been made on the HCIS which can be useful for designing the injection optics for the EBIS low energy beam transport (LEBT).

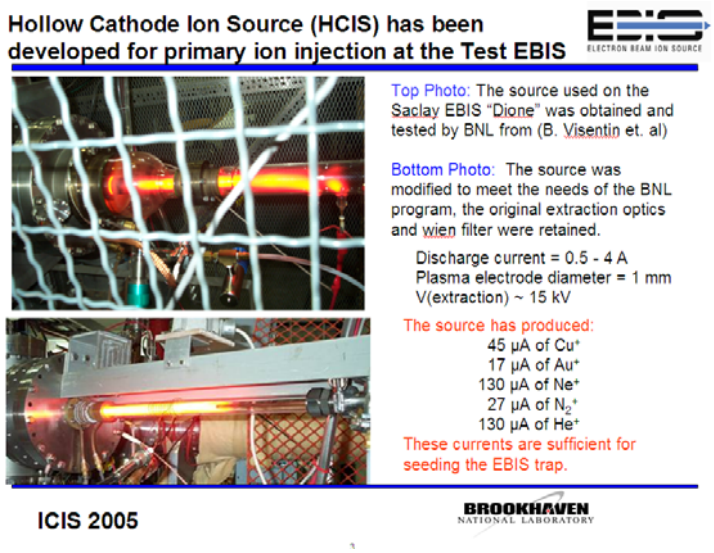


The figure below shows the compact emittance measuring device built in our laboratory. It is a slit and collector unit, with 30 etched tungsten mesh collector foils and 31 kapton foils, (each foil 0.002" thick). The signal from each strip is sampled at any selected time during the beam pulse before digitization. The emittance head can fit into a four inch cross and scans across the beam in one direction. The slit to detector distance used in these measurements was 38 mm This distance has been selected to provide the angular acceptance necessary to accommodate the relatively high current (1-10mA), low energy (~20qkV) ion beams produced at the TestEBIS.

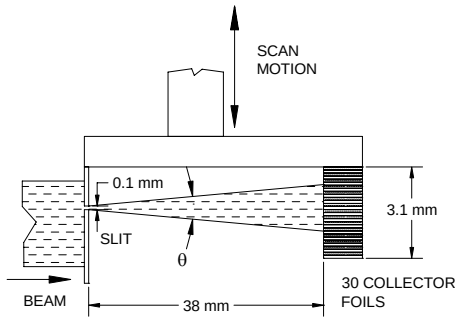


The HCIS operates with a metal cathode and a working gas so that ions of either species can be extracted and separated using a wien (ExB) filter. Injection into the TestEBIS is usually made with the HCIS biased at 10-15kV. A sample of emittance measurements for Cu+ and Ne+ on beams is given below. These measurements were made before the most recent upgrades of the HCIS. Additional measurements are expected to be made with a pepperpot device.

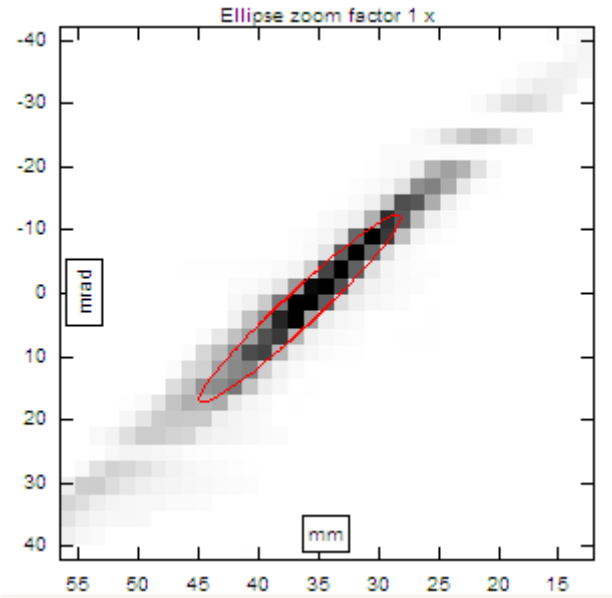


Emittance of a 15.6µA, 14keV $Cu^{1+}$ ion beam from the HCIS external source
(from 040203-09_cu_14kv …….dat)
RMS: 29 pi mm mrad
Norm. RMS: 0.017 pi mm mrad

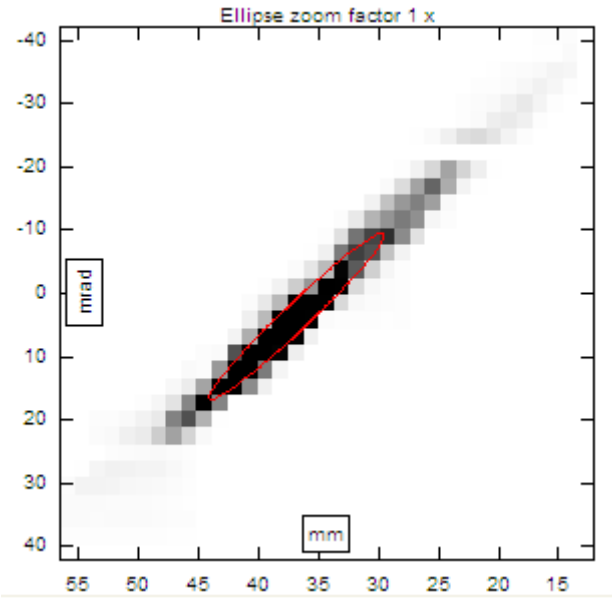


Emittance of a 25µA, 14keV $Ne^{1+}$ ion beam from the HCIS external source
(from 040209-05_Ne_14kv …….dat)
RMS: 19 pi mm mrad
Norm. RMS: 0.024 pi mm mrad

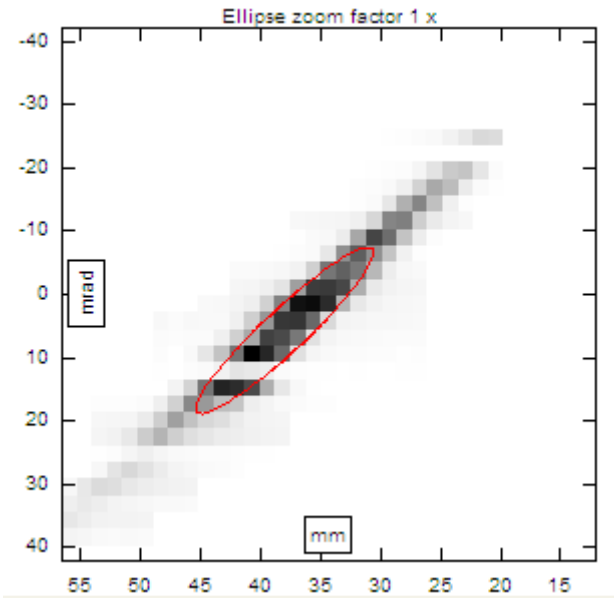


Emittance of a 9μA, 9keV $Cu^{1+}$ ion beam from the HCIS external source
(from 040309-03_Hollow Cathode …….dat)
RMS: 31 pi mm mrad
Norm. RMS: 0.017 pi mm mrad

A summary of the emittance data from the HCIS using the slit and foil detector is given in the table below:

| Ion Species | Energy [keV] | Current [μA] | Rms emit. π mm mrad | Norm.Rms emit. π mm mrad | |
|---|---|---|---|---|---|
| Cu+ | 9 | 9 | 31 | 0.017 | |
| Cu+ | 14 | 25 | 19 | 0.024 | |
| Ne+ | 14 | 15.6 | 29 | 0.017 | |