Ring Main Horizontal Quads - 248m Ring Design - Winding Definition, Each Superperiod

(File: RNGQ1W2A)

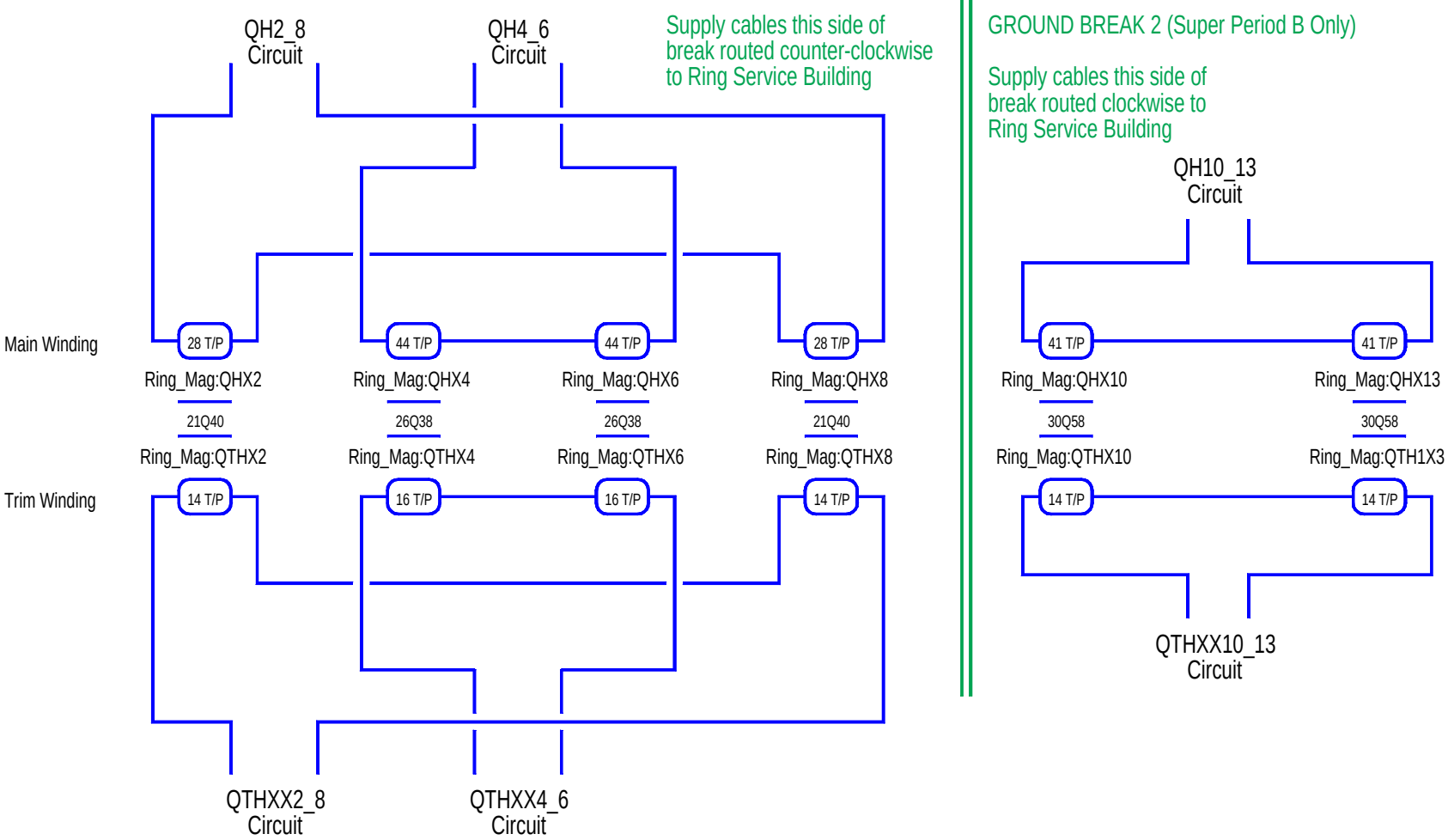

Ring Horizontal Main Quads - 248m Ring Design - Superperiod Interconnection

(File: RNGQ2W2C)

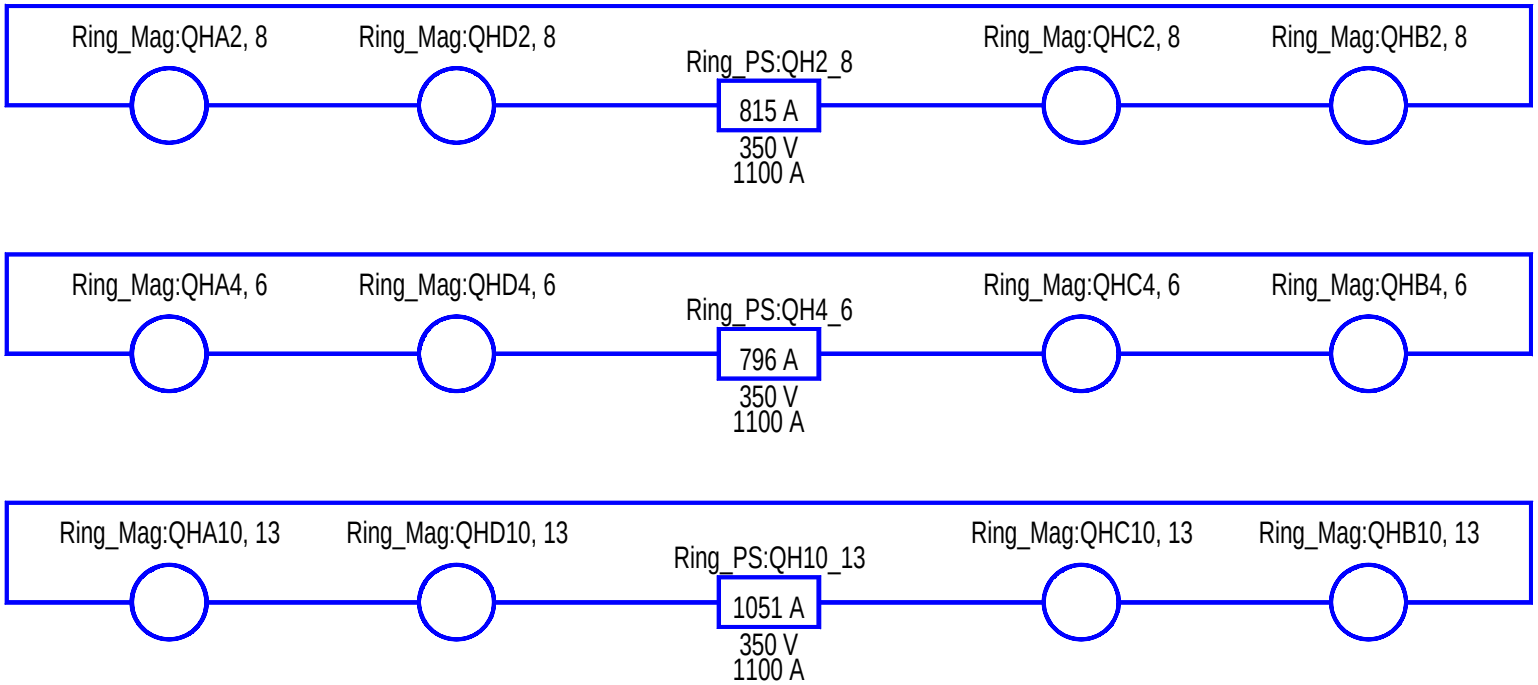

Ring Horizontal Main Quad Trim Windings - 248m Ring Design - Superperiod Interconnection

(File: RNGQ3W2A)

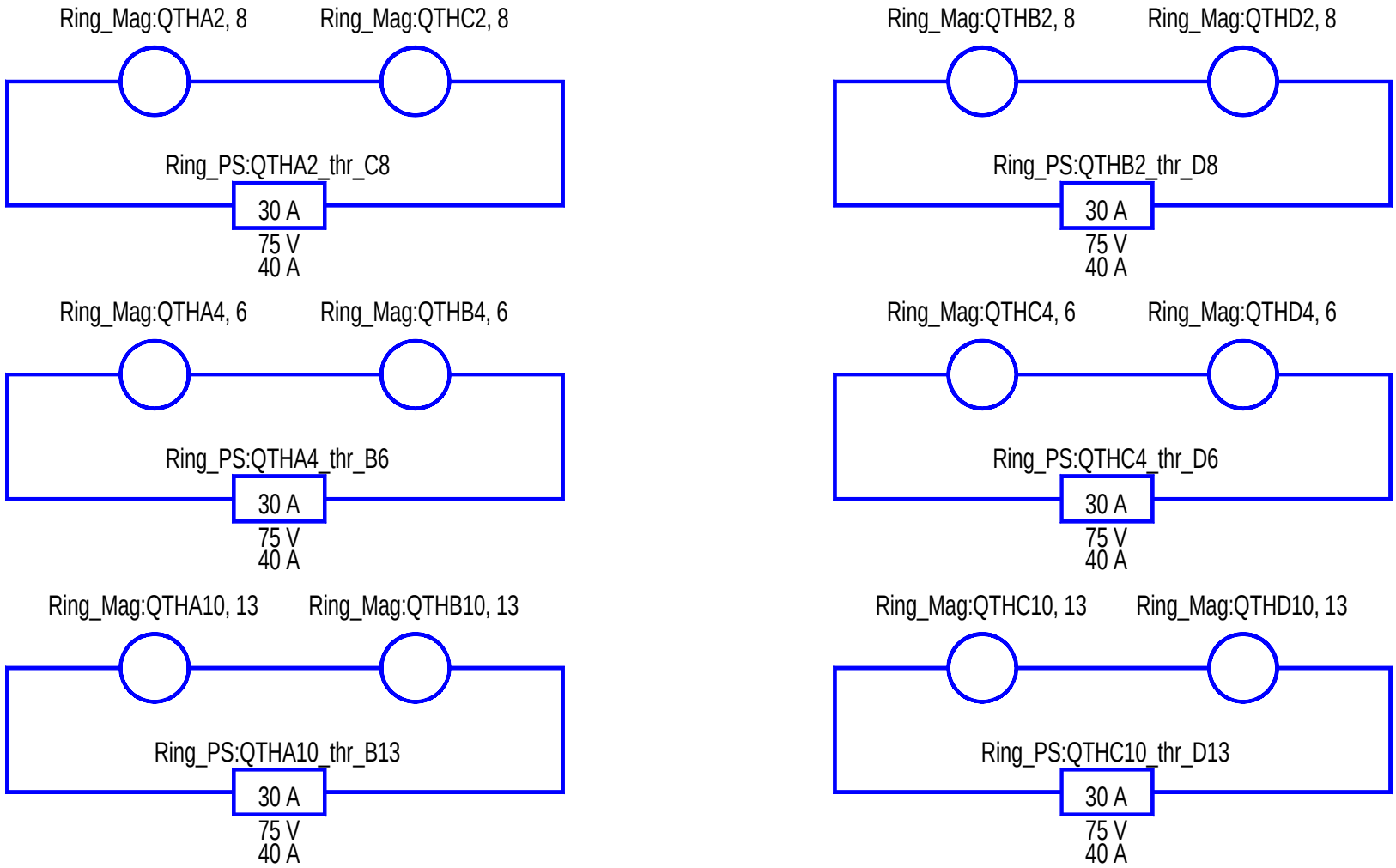

Ring Main Vertical Quads - 248m Ring Design - Winding Definition, Each Superperiod

(File: RNGQ4W2A)

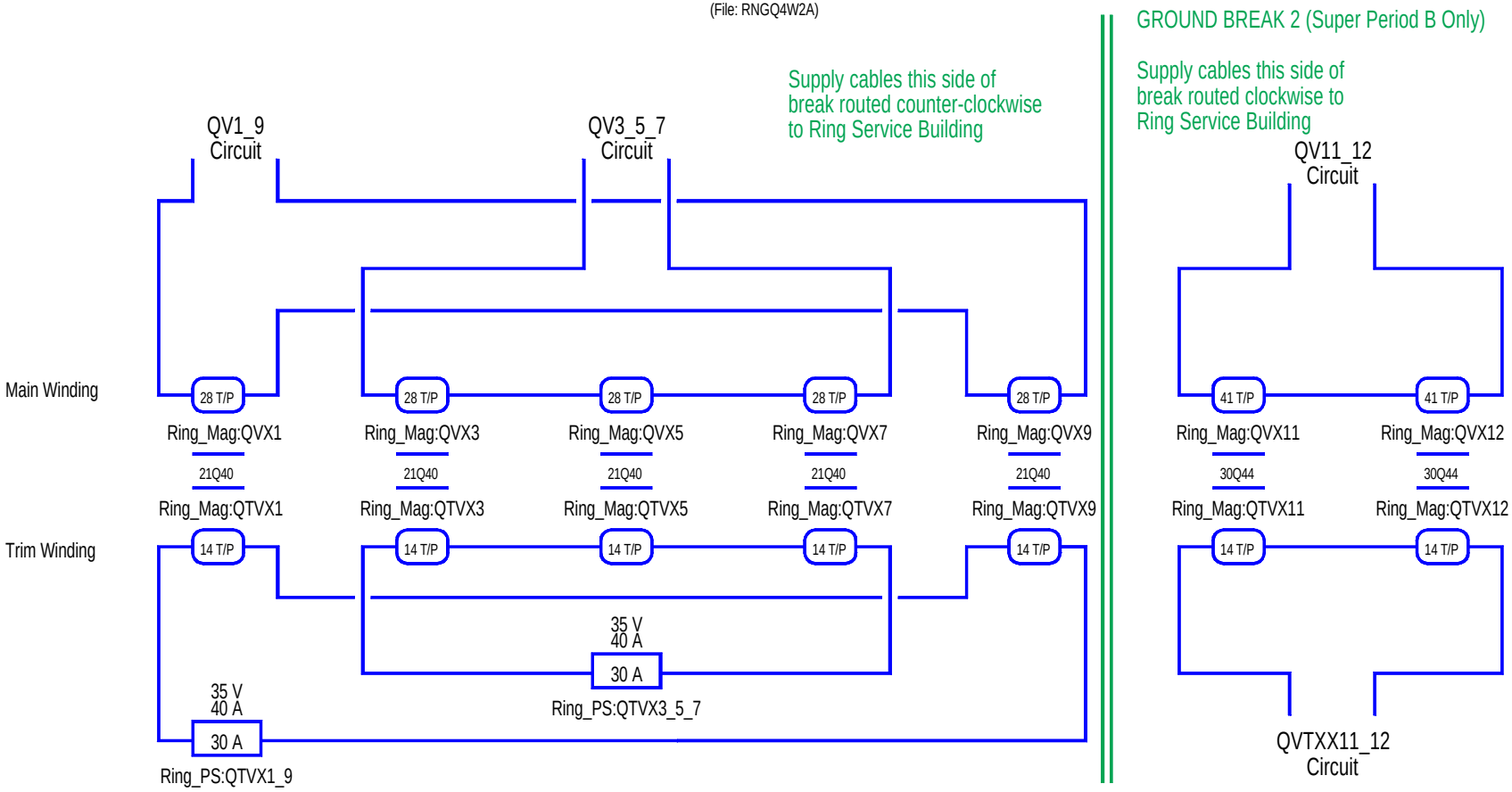

Ring Vertical Main Quads - 248m Ring Design - Superperiod Interconnection
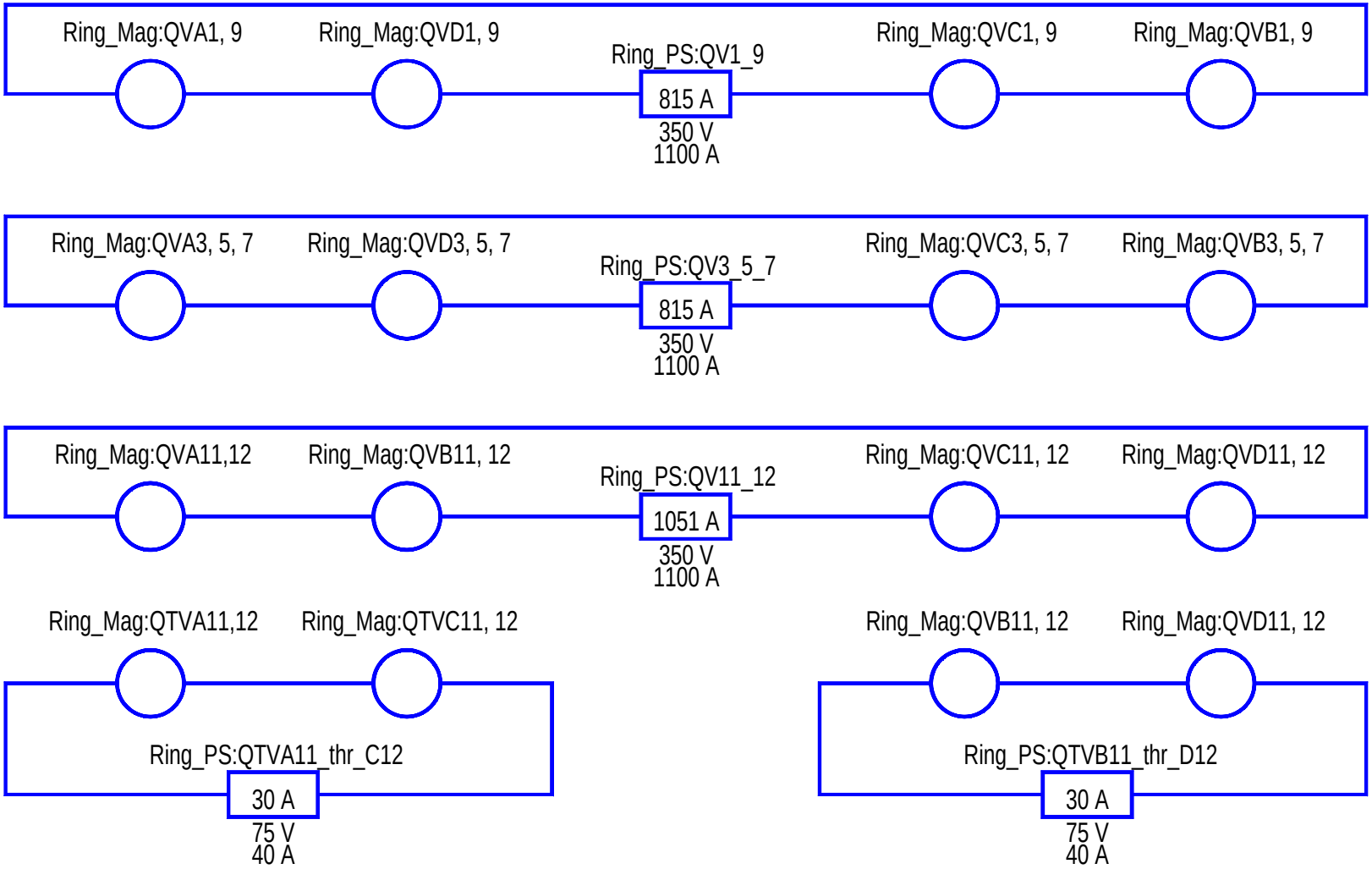
(File: RNGQ5W2C)