Climatic Change (2011) 106:315–326
DOI 10.1007/s10584-010-9903-9

BNL-93706-2011-JA

Feedback and sensitivity in an electrical circuit: an analog for climate models

Stephen E. Schwartz

Received: 20 March 2009 / Accepted: 16 June 2010 / Published online: 27 July 2010
© Springer Science+Business Media B.V. 2010

Abstract Earth's climate sensitivity is often interpreted in terms of feedbacks that can alter the sensitivity from that of a no-feedback Stefan-Boltzmann radiator, with the feedback concept and algebra introduced by analogy to the use of this concept in the electronics literature. This analogy is quite valuable in interpreting the sensitivity of the climate system, but usage of this algebra and terminology in the climate literature is often inconsistent, with resultant potential for confusion and loss of physical insight. Here a simple and readily understood electrical resistance circuit is examined in terms of feedback theory to introduce and define the terminology that is used to quantify feedbacks. This formalism is applied to the feedbacks in an energy-balance model of Earth's climate and used to interpret the magnitude of feedback in the climate system that corresponds to present estimates of Earth's climate sensitivity.

1 Introduction

The feedback concept, which has been extremely valuable in the design and analysis of electronic circuits (Bode 1945; Langford-Smith 1953) is broadly useful in disciplines beyond electronics, and thus is widely used in the interpretation of the response of Earth's climate to perturbations (e.g., Hansen et al. 1984; Schlesinger 1988; Roe and Baker 2007). For a system that is subject to positive (negative) feedback the response to a given perturbation is greater (less) than that which would be expected in the absence of such feedbacks. A physical process that would give rise to a positive feedback in Earth's climate system would be an increase in the concentration of water vapor due to increase in surface temperature in response to a greenhouse forcing by incremental carbon dioxide (CO_2) that enhanced the greenhouse warming

S. E. Schwartz (✉)
Atmospheric Sciences Division, Brookhaven National Laboratory,
Bldg. 815E (75 Rutherford Dr.), PO Box 5000,
Upton, NY 11973, USA
e-mail: ses@bnl.gov

beyond that due to the incremental CO_2 itself. An example of a negative feedback would be an increase in cloudiness resulting from an increase in surface temperature, decreasing the absorption of solar radiation, thereby diminishing the increase in temperature that would result from the initial perturbation. Feedbacks in the climate system thus alter the sensitivity of Earth's climate to perturbations.

The feedback concept is broadly understood and widely employed in the interpretation of studies of the response of Earth's climate system to perturbations as carried out with large scale computer models (e.g., Cess et al. 1996; Boer and Yu 2003; Colman 2003; Bony et al. 2006; Webb et al. 2006; Soden et al. 2008) and in conveying the sensitivity of Earth's climate to the broader public. However, an examination of published papers shows considerable inconsistency in terminology referring to feedbacks and their relation to climate sensitivity. Here the feedback concept is examined initially through a simple electrical circuit to define the pertinent terminology. The analysis is then applied to a whole-earth energy-balance model to extend this terminology to the climate system. Inherently a presentation such as this is didactic, and that is the intent here, rather than to be dogmatic about definitions. Finally the relations of the several quantities characterizing the feedback and its relation to climate sensitivity are illustrated for the estimate of Earth's climate sensitivity and its probable uncertainty range as given by the Intergovernmental Panel on Climate Change (IPCC 2007).

The concept of feedback in Earth's climate system in relation to broader use of the term and concept has been examined in two recent papers. Bates (2007) distinguishes between sensitivity altering feedbacks (as discussed here) and stability altering feedbacks (as applied in control theory). Roe (2009) limits consideration to sensitivity altering feedback but extends the concept to the time-dependent response of the climate system to an imposed forcing. Here consideration is limited to equilibrium response of a system to an imposed forcing.

2 Illustration of feedback concept for electrical resistance circuit

The quantities needed to introduce the feedback concept are perhaps most readily introduced by a familiar example, namely a simple electrical circuit, Fig. 1a, consisting of a current source and a resistor, for which the current I_0 initially passing through the resistor (resistance R) gives rise to a voltage across the resistor according to Ohm's law $V_0 = RI_0$, Here interest is focused on the change in voltage across the resistor V (*output variable*) that would result from a change in current through the resistor I (*input variable*). The *sensitivity* of the circuit is defined as the change in output variable per change in input variable,

$$S \equiv \frac{\Delta V}{\Delta I}.$$

Upon application of a perturbation in current $I \to I_0 + \Delta I$, according to Ohm's law, which assumes that the resistance R is a constant, the voltage attains a new value

$$V \to V_0 + \Delta V = R(I_0 + \Delta I) = RI_0 + R\Delta I$$

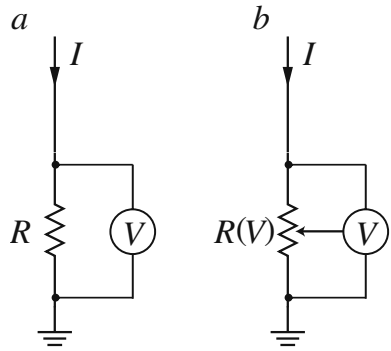

Fig. 1 Electrical circuit. **a** Without feedback, in which voltage V depends on current I; resistance R is fixed; **b** with feedback, in which resistance $R(V)$ depends on voltage across resistor V

The perturbation in input variable (*forcing*) is ΔI. The perturbation in output variable (*response*) that results from this forcing is

$$\Delta V = R\Delta I$$

The sensitivity of the system is given by the ratio of the steady-state or equilibrium response to the forcing (i.e., the response at times long relative to any transient in establishing the change in voltage subsequent to imposition of the perturbation in current):

$$\mathrm{S_{NF}} \equiv \frac{\Delta V}{\Delta I} = R; \tag{1}$$

the subscript NF denotes that this is the sensitivity for a system with no feedback. The sensitivity is a quantity with dimension, specifically here electric potential difference per current, having the unit volt per ampere, or ohm. The system is *linear*, in that the response ΔV is directly proportional to the forcing ΔI. For comparison with the situation in which feedback is introduced into the circuit it is also of interest to define the *inverse sensitivity* of the system, which is the inverse of the sensitivity. Here

$$S_{\mathrm{NF}}^{-1} \equiv R^{-1}.$$

The inverse sensitivity is likewise a dimensioned quantity with physical unit, here ohm^{-1}.

This simple situation is contrasted with a situation in which there is feedback in the system, introduced in the example shown in Fig. 1b by the value of the resistance being dependent upon the voltage across the resistor. In response to the perturbation in current (forcing) the voltage across the resistor changes and the value of the resistance changes resulting in further change in voltage (*feedback*). The change in voltage for this circuit is evaluated for small forcing by linearization about the initial state of the system:

$$R = R(V) \approx R(V_0) + \left.\frac{\partial R}{\partial V}\right|_0 (V - V_0), \tag{2}$$

where the subscript 0 on the derivative denotes that the derivative is evaluated about the initial state. The partial derivative notation represents the response of resistance to voltage across the resistor and not the total change that would result from a change in the input variable current. Initially, as in the no-feedback case, $V_0 = I_0 R$;

also the initial resistance is $R_0 \equiv R(V_0)$. Upon the perturbation in current (forcing) $I \to I_0 + \Delta I$, the voltage adjusts to a new value, which is given to first order in the perturbation as

$$V \to V_0 + \Delta V = (R_0 + \Delta R)(I_0 + \Delta I) \approx \left(R_0 + \left.\frac{\partial R}{\partial V}\right|_0 \Delta V \right)(I_0 + \Delta I)$$
$$\approx R_0 I_0 + R_0 \Delta I + I_0 \left.\frac{\partial R}{\partial V}\right|_0 \Delta V, \tag{3}$$

from which the response is seen to have two components, that due to the resistance at its initial value and that due to the change in the resistance. Within the approximations in Eq. 3 the change in voltage (response) satisfies the equation:

$$\Delta V \equiv V - V_0 = V - I_0 R_0 = R_0 \Delta I + I_0 \left.\frac{\partial R}{\partial V}\right|_0 \Delta V, \tag{4}$$

which is solved to determine the dependence of the response $\Delta V$to the forcing ΔI:

$$\Delta V = \frac{R_0}{\left(1 - I_0 \left.\frac{\partial R}{\partial V}\right|_0\right)} \Delta I,$$

which yields for sensitivity

$$S \equiv \frac{\Delta V}{\Delta I} = \frac{R_0}{1 - I_0 \left.\frac{\partial R}{\partial V}\right|_0} = \frac{R_0}{1 - \frac{V_0}{R_0} \left.\frac{\partial R}{\partial V}\right|_0} \frac{R_0}{1 - \left.\frac{\partial \ln R}{\partial \ln V}\right|_0}. \tag{5}$$

As in the case without feedback the sensitivity is a dimensioned quantity, with the same unit as that in the absence of the feedback. Note that an increase of resistance with voltage would result in $\partial \ln R / \partial \ln V$ being positive, so that the voltage across the resistor would be greater than it would be in the absence of the feedback (*positive feedback*). In this case the denominator is less than unity, leading to the enhancement in sensitivity that constitutes positive feedback. Alternatively if the resistance were to decrease with increasing voltage $\partial \ln R / \partial \ln V$ would be negative, the voltage across the resistor would be less than it would be in the absence of feedback, and the denominator would be greater than unity, decreasing the sensitivity, according to the negative feedback. Note also that the system is still linear in the response to the perturbation: the increase in V from its initial state V_0, ΔV, is proportional to the increase in I from its initial state I_0; that is the sensitivity is independent of the magnitude of the perturbation. This linearity, which results from the linearization of Eq. 2, holds only in the limit of small fractional perturbations.

The sensitivity for the feedback case is conveniently expressed as equal to the sensitivity for the no-feedback case times a *feedback factor*

$$S \equiv R_0 f = S_{\mathrm{NF}} f,$$

which yields for the feedback factor the expression

$$f = \frac{1}{1 - \left.\frac{\partial \ln R}{\partial \ln V}\right|_0} \tag{6}$$

The feedback factor, being the ratio of the sensitivity with feedback to that without feedback is dimensionless. The feedback factor, like the sensitivity, is independent

of the magnitude of the perturbation. For positive (negative) feedback the feedback factor is greater (less) than unity.

It is useful also to define a *normalized feedback strength* Φ, a further dimensionless quantity, whose magnitude may be compared to unity and whose sign indicates the sense of the feedback, positive or negative.

$$f = \frac{1}{1-\Phi}; \Phi = \left.\frac{\partial \ln R}{\partial \ln V}\right|_0 \tag{7}$$

The sign convention in the definition of feedback strength results in a positive value of Φ corresponding to a positive feedback ($f > 1$; $S > S_{\mathrm{NF}}$), and a negative value of Φ corresponding to negative feedback ($f < 1$; $S < S_{\mathrm{NF}}$).

The terminology and nomenclature regarding "feedback factor" are quite inconsistent in both the electronics literature and the climate literature. Hence the meaning ascribed to the term "feedback factor" in a given study must be inferred from a careful reading; it is this situation that the present paper intends to clarify. In his classic treatise on feedback amplifiers in electronic circuits Langford-Smith (1953, footnote, page 308) advises caution in interpretation of the quantity denoted by the term "feedback factor;" he himself uses the inverse of the quantity denoted here by f, as it is by this *factor* (greater than unity for negative feedback) that the gain of an amplifier stabilized by negative feedback is diminished from its open-loop gain by the feedback. Electrical engineers tend to ignore inverses and express the results in decibels without a sign, but specify whether the feedback is positive or negative (D. Rutledge, California Institute of Technology, private communication, 2009). Denoting the quantity f the *feedback factor* is consistent with the usage of Hansen et al. (1984) in their early analysis of climate feedbacks and sensitivity and with later usage in the climate literature (e.g., McGuffie and Henderson-Sellers 2005; Tsushima et al. 2005; Bony et al. 2006; Huybers 2010); it is the *factor* by which the sensitivity is enhanced relative to the situation in the absence of feedbacks. However many investigators in the climate literature (e.g., Schlesinger 1988, footnote, p. 657; Zhang 2004; Bates 2007; Roe and Baker 2007, note 15; Roe 2009) and also in the electronics literature (Bode 1945, p. 32) refer to the additive quantity denoted here by Φ as the "feedback factor."

In the climate literature feedbacks are commonly interpreted in terms of the inverse sensitivity, $\Lambda \equiv S^{-1}$, often denoted the "total feedback strength," "total feedback," "feedback parameter," or simply "feedback" but occasionally (e.g., Raper et al. 2002; Murphy 2010) "feedback factor". For the simple feedback circuit of Fig. 1b the inverse sensitivity is

$$\Lambda \equiv S^{-1} = R_0^{-1}\left(1 - \left.\frac{\partial \ln R}{\partial \ln V}\right|_0\right) = R_0^{-1} - R_0^{-1}\left.\frac{\partial \ln R}{\partial \ln V}\right|_0 . \tag{8}$$

Commonly the terms that contribute to the inverse sensitivity (variously referred to as "feedback factors," "feedback strengths," or "feedback gains") are denoted as λ_i, with the first term λ_0 corresponding to the no-feedback system, and the remaining terms (there may be several) expressed as a summation,

$$\Lambda = \lambda_0 - \sum \lambda_i;$$

the negative sign in front of the summation leads to the convention that positive λ_i corresponds to a positive feedback and negative λ_i corresponds to negative feedback.

The inverse sensitivity given by (8) consists of two terms:

$$\Lambda = \lambda_0 - \lambda_1 = R_0^{-1} - R_0^{-1} \left. \frac{\partial \ln R}{\partial \ln V} \right|_0 . \tag{9}$$

The leading term, $\lambda_0 = R_0^{-1}$, is equal to the inverse sensitivity in the absence of feedback, from which it is seen that this quantity, which is often referred to as a "feedback strength," in fact has nothing at all to do with the feedback. The second term, $\lambda_1 = R_0^{-1}(\partial \ln R/\partial \ln V)_0$, is the actual *feedback strength* of the circuit. The normalized feedback strength Φ in (7) is thus seen to be the feedback strength normalized by the inverse sensitivity in the absence of feedback. Note that with the sign convention a positive value of λ_1 (positive $\partial \ln R/\partial \ln V$) corresponds to a positive feedback.

For normalized feedback strength Φ approaching unity the feedback factor f becomes quite large. This situation leads, for example, to the familiar "ringing" of public address systems due to acoustic feedback. In electrical engineering the departure of Φ from unity, commonly measured in decibels, is characterized as the "gain margin"; the greater the gain margin, the greater the stability of the circuit. As Φ approaches unity the feedback factor also becomes quite sensitive to the value of Φ, as shown in Fig. 2; consequently any noise or uncertainty in Φ becomes greatly amplified in the sensitivity, as pointed out in the context of feedback in the climate system by Hansen et al. (1984), Schlesinger (1988), and more recently Roe and Baker (2007) and Roe (2009). This amplification of uncertainty may be quantified as follows. From (7)

$$\frac{df}{d\Phi} = \frac{1}{(1-\Phi)^2} = f^2,$$

from which it is seen that the fractional uncertainty in the feedback factor f and hence in the sensitivity S is given by

$$\frac{\Delta S}{S} = \frac{\Delta f}{f} = f \Delta \Phi; \tag{10}$$

that is, an uncertainty of 0.01 in normalized feedback strength Φ (i.e., 1% uncertainty in the feedback strength relative to the inverse sensitivity in the absence of feedback) gives rise to a relative uncertainty of f% in the feedback factor and in the sensitivity.

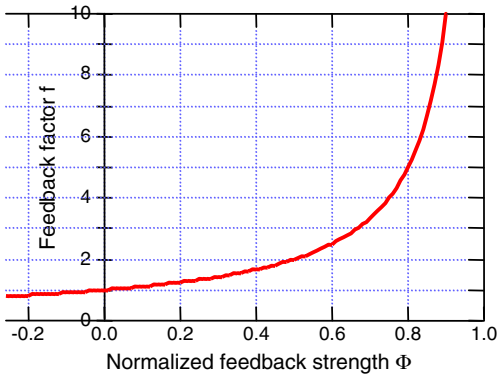

Fig. 2 Dependence of feedback factor f on normalized feedback strength Φ for arbitrary system exhibiting positive or slight negative feedback. For $\Phi = 0$ there is no feedback; that is, feedback factor $f = 1$

The amplification of uncertainty between feedback strength and feedback factor for $f > 1$ has obvious implications for determination of the sensitivity of Earth's climate system and the consequences of uncertainty in feedback strengths.

3 Single-compartment energy balance model of Earth's climate system

The foregoing illustration of feedback in a simple electrical circuit serves as a model for definition and interpretation of feedbacks in Earth's climate system. In the climate system the input variable is the net irradiance at the top of the atmosphere (TOA); the output variable is the steady-state (often denoted "equilibrium") global-mean near-surface air temperature (GMST) T_s. A change in net TOA irradiance is the forcing, ΔF; the resultant change in GMST, ΔT_s, is the response. The sensitivity is the response per forcing, that is, the change in GMST per change in net TOA flux.

$$S = \frac{\Delta T_s}{\Delta F} \tag{11}$$

In the absence of feedback the climate sensitivity would be that of a Stefan-Boltzmann radiator at temperature T_s, derived below. The sensitivity of Earth's climate system departs from that of the no-feedback radiator because of feedbacks—importantly changes in cloudiness, snow and ice cover, water vapor concentration, and vertical temperature profile with change in temperature that can amplify or diminish the effect of an initial perturbation.

Considering Earth's atmosphere–ocean–land system as a single compartment immediately leads to an expression for the rate of change of the global heat content that serves as the basis of energy balance models of Earth's climate system. While such models are highly simplified representations of the climate system and clearly cannot represent any of the vertical, horizontal, or seasonal fine structure of the climate system, they are useful to illustrate important features of Earth's climate system such as sensitivity and feedbacks and thus lead to considerable insight. According to such a model the rate of change of the heat content of Earth's climate system is given by

$$\frac{dH}{dt} = Q - E \tag{12}$$

where Q is the rate of absorption of solar (shortwave) energy, E is the rate of emission of thermal (longwave infrared) radiation at the top of the atmosphere.

Equation 12 is the basis for the energy balance model of Earth's climate system that leads to a derivation of the climate sensitivity of the planet as a whole in terms of pertinent "whole earth" variables. Derivation of an expression for Earth's climate sensitivity assumes that the system is initially in steady state,

$$Q_0 - E_0 = 0,$$

where, as in the variable resistance model, the subscript 0 denotes the initial state. Following imposition of a forcing (taken here to be positive) energy balance of the climate system is restored as the surface temperature increases, increasing outgoing longwave radiation, thereby limiting the resulting increase in temperature rise, and the climate system relaxes to a new steady state. Conventionally for small perturbations a linear relation, Eq. 11, is assumed between steady-state change in T_s, ΔT_s,

and the imposed forcing ΔF. The equilibrium climate sensitivity S is equal to the change in temperature at the new steady state per unit change in a radiative flux. At the new steady state

$$Q_0 + \Delta Q - E_0 - \Delta E + \Delta F = 0$$

whence

$$\Delta E - \Delta Q = \Delta F$$

From the definition of sensitivity (Eq. 11)

$$S\frac{\Delta T_s}{\Delta F} = \frac{\Delta T_s}{\Delta E - \Delta Q} = \frac{1}{\frac{dE}{dT_s}\big|_0 - \frac{dQ}{dT_s}\big|_0}$$

where as in the variable resistance example the subscripts 0 on the derivatives indicate that they are to be evaluated at the initial, unperturbed state; again the feedback model consists of exploration of the consequences of a small perturbation on the initial state, with retention only of first-order terms. The rate of absorption of solar (shortwave) energy is

$$Q = \gamma J_S/4$$

where γ is the planetary coalbedo (complement of albedo) and J_S is the solar constant, the factor of 4 being the ratio of the area of the planet to that of the subtended disk. The rate of emission of longwave radiation at the top of the atmosphere is calculated according to the Stefan-Boltzmann radiation law evaluated for the global mean surface temperature T_s with an effective planetary emissivity ε (Wetherald and Manabe 1988) as

$$E = \varepsilon\sigma T_s^4.$$

Hence at the initial state

$$\varepsilon_0\sigma T_{s0}^4 = \gamma_0 J_S/4,$$

where the subscript 0 denoting the initial state has been added not just to the surface temperature but also to the emissivity and coalbedo in the expectation that these quantities may also change as the planetary temperature reaches its new steady state value, for example by changes in snow and ice cover, cloudiness, and atmospheric water vapor content.

If it is assumed that neither ε nor γ depends on T_s, (i.e., that there is no feedback in the response of the climate system to a perturbation about its initial state) then $dE/dT_s = 4\varepsilon\sigma T_s^3 = \gamma J_S/T_s$ and $dQ/dT_s = 0$ and the no-feedback sensitivity characteristic of the initial climate state is

$$S_{NF} = \frac{T_s}{\gamma J_S}. \tag{13}$$

This no feedback sensitivity may be compared to the no-feedback sensitivity of the simple resistor circuit, Eq. 1. Like the sensitivity of that system, the no-feedback sensitivity of the climate system is a dimensioned quantity, here having unit K/(W m^{-2}).

Evaluation of the sensitivity with inclusion of feedbacks in the model requires expressions for the dependence of emitted energy E and absorbed energy Q on surface temperature, expressed in terms of the derivatives

$$\left.\frac{dE}{dT_s}\right|_0 = 4\varepsilon_0\sigma T_{s0}^3 + \sigma T_{s0}^4 \left.\frac{\partial\varepsilon}{\partial T_s}\right|_0 = \frac{\gamma_0 J_S}{T_{S0}}\left(1 + \frac{1}{4}\left.\frac{\partial \ln\varepsilon}{\partial \ln T_s}\right|_0\right)$$

and

$$\left.\frac{dQ}{dT_s}\right|_0 = \frac{J_S}{4}\left.\frac{\partial\gamma}{\partial T_s}\right|_0 = \frac{\gamma_0 J_S}{T_{s0}}\frac{1}{4}\left.\frac{\partial \ln\gamma}{\partial \ln T_s}\right|_0$$

whence

$$S = \frac{1}{\frac{\gamma_0 J_S}{T_{s0}}\left(1 + \frac{1}{4}\left.\frac{\partial \ln\varepsilon}{\partial \ln T_s}\right|_0 - \frac{1}{4}\left.\frac{\partial \ln\gamma}{\partial \ln T_s}\right|_0\right)} = S_{\mathrm{NF}}\frac{1}{1 - \left(\frac{1}{4}\left.\frac{\partial \ln\gamma}{\partial \ln T_s}\right|_0 - \frac{1}{4}\left.\frac{\partial \ln\varepsilon}{\partial \ln T_s}\right|_0\right)}. \tag{14}$$

It is instructive to compare this sensitivity to that of the circuit in which the resistance depends on the voltage, Eq. 5. Here the two derivatives in the denominator again represent physical feedbacks in the climate system, in this case, changes in the properties of the climate system that further influence the absorption of solar radiation or the emission of infrared radiation by the climate system, respectively, beyond the imposed radiative perturbation. A decrease in emissivity with increasing surface temperature, as would result from an increase in atmospheric water vapor with increasing surface temperature (as by Clausius-Clapeyron) would decrease the denominator and increase climate sensitivity; this would be a positive feedback in the climate system. A decrease in cloudiness with increasing surface temperature would increase shortwave coalbedo, again resulting in increased sensitivity (positive feedback), whereas an increase in cloudiness would decrease coalbedo and decrease sensitivity (negative feedback). As with the voltage-feedback resistor circuit, the sensitivity for the feedback case is conveniently expressed as equal to the sensitivity for the no-feedback case times a feedback factor, $S \equiv S_{\mathrm{NF}} f$; here the feedback factor is:

$$f = \frac{1}{1 - \left(\frac{1}{4}\left.\frac{\partial \ln\gamma}{\partial \ln T_s}\right|_0 - \frac{1}{4}\left.\frac{\partial \ln\varepsilon}{\partial \ln T_s}\right|\right)} \tag{15}$$

The normalized feedback strength Φ, obtained by expressing the feedback factor as $f = 1/(1 - \Phi)$, is

$$\Phi = \frac{1}{4}\left.\frac{\partial \ln\gamma}{\partial \ln T_s}\right|_0 - \frac{1}{4}\left.\frac{\partial \ln\varepsilon}{\partial \ln T_s}\right|_0 \tag{16}$$

where again a positive value of Φ corresponds to a positive feedback ($f > 1$; $S > S_{\mathrm{NF}}$), and a negative value of Φ corresponds to negative feedback ($f < 1$; $S < S_{\mathrm{NF}}$). The inverse sensitivity (frequently referred to as the "feedback") is

$$\Lambda \equiv S^{-1} = \frac{\gamma_0 J_S}{T_{s0}}\left(1 - \frac{1}{4}\left.\frac{\partial \ln\gamma}{\partial \ln T_s}\right|_0 + \frac{1}{4}\left.\frac{\partial \ln\varepsilon}{\partial \ln T_s}\right|_0\right) = \lambda_0 - \sum \lambda_i \tag{17}$$

where the several terms contributing to the summation are

$$\lambda_0 = \frac{\gamma_0 J_S}{T_{s0}} = S_{NF}^{-1} \quad \lambda_1 = \left(\frac{\gamma_0 J_S}{T_{s0}}\right)\left(\frac{1}{4}\frac{\partial \ln \gamma}{\partial \ln T_s}\bigg|_0\right); \quad \lambda_2 = \left(\frac{\gamma_0 J_S}{T_{s0}}\right)\left(\frac{1}{4}\frac{\partial \ln \varepsilon}{\partial \ln T_s}\bigg|_0\right), \tag{18}$$

from which it is seen, as with the resistor feedback circuit, that the first term does not involve feedback at all; the second and third terms are the shortwave and longwave feedback strengths, respectively. The normalized feedback strength Φ in (16) is equal to the feedback strength $\sum \lambda_i$ normalized by the inverse sensitivity in the absence of feedback.

Evaluation of the no-feedback sensitivity (Eq. 13) for Earth's present climate, that is, global mean surface temperature $T_s = 288$ K, solar constant $J_s = 1370$ W m^{-2} (Kandel and Viollier 2005), and planetary coalbedo γ 0.71 (Kandel and Viollier 2005), yields $S_{NF} = 0.30$ K/(W m^{-2}); this may be compared to no-feedback sensitivities of current global climate models, which range from 0.307 to 0.319, K/(W m^{-2}), the variation depending mainly on the spatial distribution of temperature change (Soden and Held 2006). For the forcing due to doubling of CO_2 taken as $F_{2\times} = 3.7$ W m^{-2} (Myhre et al. 1998), the corresponding doubling temperature is $\Delta T_{2\times} = 1.10$ K. This doubling temperature may be compared to the range of estimates of Earth's actual climate sensitivity given by the IPCC (2007) assessment, best estimate value for $\Delta T_{2\times}$ of 3 K, with a probability of 66% that the sensitivity is between 2 and 4.5 K. The corresponding sensitivity, Fig. 3, is $S = 0.81$ K/(W m^{-2}) (range 0.54–1.22 K/(W m^{-2})), from which the feedback factor is $f = 2.7$ (range 1.8–4.1), indicative of substantial positive feedback. The value of normalized feedback strength corresponding to this sensitivity is $\Phi = 0.63$ (range 0.45–0.76). Here it might be observed that because of the increase in slope $df/d\Phi$ with increasing Φ, the increase in Φ (0.13) from the best estimate value 0.63 to the upper uncertainty value 0.76, which corresponds to an increase in $\Delta T_{2\times}$ from 3 K to 4.5 K (1.5 K),

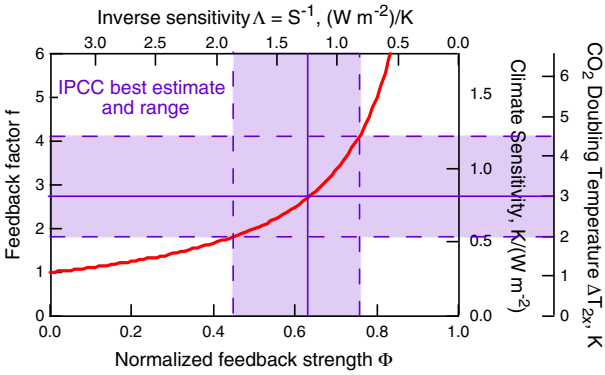

Fig. 3 Relation between normalized feedback strength (*bottom axis*) and feedback factor (*left axis*) for arbitrary system exhibiting positive feedback, red, as in Fig. 2. *Right* and *upper axes* show relations between these quantities and climate sensitivity, CO_2 doubling temperature, and inverse climate sensitivity. Solid and dashed purple lines give values of the several other quantities corresponding to the best estimate and associated 17–83% uncertainty range of CO_2 doubling temperature given by the IPCC (2007) assessment report

is actually less than the decrease in Φ (0.18) from the best estimate value 0.63 to the lower uncertainty value 0.76, which corresponds to an decrease in $\Delta T_{2\times}$ from 3 K to 2 K (1 K). Amplification of the uncertainty in the normalized feedback strength Φ into that of the feedback factor f, which is a general consequence of positive feedback, has long been recognized in the climate literature (e.g., Hansen et al. 1984; Schlesinger 1988), and its consequences have recently been examined by Roe and Baker (2007) and Roe (2009). This amplification, together with the need for accurate knowledge of Earth's climate sensitivity as input to decision making about future emissions of greenhouse gases, imposes quite stringent requirements on understanding of the processes that contribute to feedbacks in Earth's climate system and on the representation of these processes in global climate models to determine feedback strengths.

4 Conclusion

The intent of this note has been to present a consistent set of definitions of sensitivity and feedbacks of physical systems and to illustrate them as they pertain to a simple and readily understood electrical circuit as a model for the application and interpretation of these quantities as they pertain to Earth's climate system. This treatment immediately distinguishes feedbacks in the climate system from the no-feedback response. Of course definitions by themselves do not change the physics of the system. Nonetheless consistent use of terminology facilitates communication and understanding, whereas in contrast, inconsistent use of terminology can lead to confusion and inhibit understanding. It is thus hoped that this note will facilitate future communication about the important concepts pertaining to feedbacks in Earth's climate system. Still, at least for the foreseeable future, it would seem that the rule of *caveat emptor* applies when interpreting the quantity that is intended by the term "feedback factor."

Acknowledgements Supported by the U.S. Department of Energy's Atmospheric Science Program (Office of Science, OBER) under Contract No. DE-AC02-98CH10886. I thank David Rutledge (Department of Electrical Engineering, California Institute of Technology) and Ernie Lewis (BNL) for valuable discussion and two anonymous reviewers for insightful comments.

References

Bates JR (2007) Some considerations of the concept of climate feedback. Q J Roy Meteorol Soc 133:545–560

Bode HW (1945) Network analysis and feedback amplifier design, 12th printing. Van Nostrand, New York

Boer GJ, Yu B (2003) Climate sensitivity and response. Clim Dyn 20:415–429

Bony S, Colman R, Kattsov VM, Allan RP, Bretherton CS, Dufresne J-L, Hall A, Hallegatte S, Holland MM, Ingram W, Randall DA, Soden BJ, Tselioudis G, Webb MJ (2006) How well do we understand and evaluate climate change feedback processes? J Climate 19:3445–3482. doi:3410.1175/JCLI3819.3441

Cess RD, Zhang MH, Ingram WJ, Potter GL, Alekseev V, Barker HW, Cohen-Solal E, Colman RA, Dazlich DA, Del Genio AD, Dix MR, Dymnikov V, Esch M, Fowler LD, Fraser JR, Galin V, Gates WL, Hack JJ, Kiehl JT, Le Treut H, Lo KK-W, McAvaney BJ, Meleshko VP, Morcrette J-J, Randall DA, Roeckner E, Royer J-F, Schlesinger ME, Sporyshev PV, Timbal B, Volodin

EM, Taylor KE, Wang W, Wetherald RT (1996) Cloud feedback in atmospheric general circulation models: an update. J Geophys Res 101:12791–12794

Colman R (2003) A comparison of climate feedbacks in general circulation models. Clim Dyn 20:865–873

Hansen J, Lacis A, Rind D, Russell G, Stone P, Fung I (1984) Climate sensitivity: analysis of feedback mechanisms, in climate processes and climate sensitivity. In: Hansen JE, Takahashi T (eds) AGU geophysical monograph 29. American Geophysical Union, pp 130–163

Huybers P (2010) Compensation between model feedbacks and curtailment of climate sensitivity. J Clim. doi:10.1175/2010JCLI3380.1

IPCC (2007) Climate change 2007: the physical science basis. In: Solomon S, Qin D, Manning M (eds) Intergovernmental Panel on Climate Change, Geneva. http://ipcc-wg1.ucar.edu/wg1/wg1-report.html

Kandel R, Viollier M (2005) Planetary radiation budgets. Space Sci Revs 120:1–26

Langford-Smith F (1953) Radiotron designer's handbook, 4th edn. Radio Corporation of America, Harrison, NJ. http://frank.yueksel.org/other/RCA/Radiotron_Designers-Handbook_Fourth-Edition

McGuffie K, Henderson-Sellers A (2005) A climate modeling primer, 3rd edn. Wiley, New York, p 280.

Murphy DM (2010) Constraining climate sensitivity with linear fits to outgoing radiation. Geophys Res Lett 37:L09704. doi:10.1029/2010GL042911

Myhre GE, Highwood EJ, Shine KP, Stordal F (1998) New estimates of radiative forcing due to well mixed greenhouse gases. Geophys Res Lett 25:2715–2718

Raper S, Gregory J, Stouffer R (2002) The role of climate sensitivity and ocean heat uptake on AOGCM transient temperature response. J Clim 15:124–130

Roe GH (2009) Feedbacks, timescales, and seeing red. Ann Revs Earth Plan Sci 37:93–115

Roe GH, Baker MB (2007) Why is climate sensitivity so unpredictable? Science 318:629–632

Schlesinger ME (1988) Quantitative analysis of feedbacks in climate model simulations of CO_2 induced warming. In: Schlesinger ME (ed) Physically based modelling and simulation of climate and climate change. NATO ASI Series C, vol 243. Kluwer Academic, Dordrecht

Soden BJ, Held IM (2006) An assessment of climate feedbacks in coupled ocean–atmosphere models. J Clim 19:3354–3360

Soden BJ, Held IM, Colman R, Shell KM, Kiehl JT, Shields CA (2008) Quantifying climate feedbacks using radiative kernels. J Clim 21:3504–3520

Tsushima Y, Abe-Ouchi A, Manabe S (2005) Radiative damping of annual variation in global mean surface temperature: comparison between observed and simulated feedback. Clim Dyn 24:591–597

Webb MJ, Senior CA, Sexton DMH, Ingram WJ, Williams KD, Ringer MA, McAvaney BJ, Colman R, Soden BJ, Gudgel R, Knutson T, Emori S, Ogura T, Tsushima Y, Andronova N, Li B, Musat I, Bony S, Taylor KE (2006) On the contribution of local feedback mechanisms to the range of climate sensitivity in two GCM ensembles. Clim Dyn 27:17–38

Wetherald R, Manabe S (1988) Cloud feedback processes in a general circulation model. J Atmos Sci 45:1397–415

Zhang MH (2004) Cloud-climate feedback, how much do we know? In: Zhu X et al (eds) Observation, theory, and modeling of atmospheric variability. World scientific series on meteorology of East Asia, vol 3. World Scientific Publishing Co, Singapore, pp 161–183