Interpretation by the Laboratory Electrical Safety Committee – June 2005

Engineered Voltage Monitoring Solutions for Lockout/Tagout

Properly engineered and installed voltage monitoring can simplify operations by providing a method of implementing lockout/tagout without requiring the use of personal protective equipment.

When used according to approved procedures, the systems described in this document can establish that system voltage has been reduced to levels where subsequent zero-voltage tests may be made using a hand-held meter and wearing safety glasses, and without additional personal protective equipment. In some engineered configurations, the installed devices will serve to indicate zero voltage without the need for further tests.

The Importance of Procedure and Timeliness

Zero-voltage verification during electrical lockout/tagout follows an A-B-A sequence. A handheld meter is tested on a known voltage source, the equipment voltage is measured to confirm a zero-voltage state, and the meter is tested once again on a known voltage source.

Timely performance of this sequence is required, with the A-B-A steps performed within minutes of one another. It is not sufficient to believe that the meter worked in the past, to measure the equipment, and to start work on the equipment intending to verify meter operation at a later time. The principle of timeliness is vital in considering alternative methods of assuring a zero-voltage state.

If a technician arrived at equipment with front panel voltage-indicating devices and observed the devices indicating zero voltage, it would not be clear if power were truly removed or if the measuring devices were simply defective. On the other hand, if the devices indicated the equipment was being powered, and when power was removed the devices responded in a timely manner to indicate zero voltage, then the device indication can be trusted to show the true condition of the equipment. In an operational situation, if a technician called to fix a piece of equipment arrived to find panel-mounted devices indicating voltage, and the equipment was then turned off and the devices indicated zero voltage, the technician could complete lockout/tagout while using safety glasses and without additional personal protective equipment and work could begin. If the technician arrived to find the devices already indicating zero voltage, the technician would have no way of knowing if the equipment were powered down or if the voltage-indicating devices were defective. In the latter case, direct contact measurement would have to be made to execute lockout/tagout, while wearing full appropriate PPE in accordance with the NFPA 70E tables appearing in the SBMS Personal Protective Equipment Manual.

Interpretation by the Laboratory Electrical Safety Committee – June 2005

Engineered Voltage-Monitoring Systems

1. Front Panel Meters

Front panel meters, commonly used on equipment handling large amounts of power, can be used to confirm a zero-voltage state. Meters used for this purpose should be wired so they directly monitor the source of power. Meter switches, if used, should be industrial-grade devices intended for this service, such as GE type SB switches.

2. Voltage Indicators

A UPA-100 "Universal Power Alert," a UL listed voltage indicator, is available from STC (Automatic Timing and Controls, Lancaster, PA). The voltage indicator can be used in the same way as front panel meters, to assist in confirming a zero-voltage state. The indicators may be wired to monitor ac or dc power, and LED lamps are lighted whenever the device senses voltage more than 40 volts. The single design operates to 600 volts and has four leads, one for each phase and one for connection to ground. This arrangement allows the device to be used on single phase and three phase circuits, and even on direct current circuits. A data sheet on the UPA-100 is attached to this document.

The device works reliably with grounded systems. Some facilities on a site have ungrounded power distribution systems designed to enhance operational reliability. These systems actually have high-resistance grounding due to the equipment continually monitoring for ground faults on any phase. The UPA-100 has a 470-k ohm resistor in each leg, and will operate properly on less than a tenth of a milliampere. Since the voltage indicator requires minimal current for proper operation, the high-resistance grounding is adequate for proper operation of the indicator.

As noted, the LED lamps are lighted whenever the device senses voltage more than 40 volts. While deployment of the UPA-100 does not permit voltage verification to zero volts, use of this device allows access to the equipment for further testing using a hand-held meter with no requirement for personal protective equipment since the voltage has been established through use of the device as below 50 volts.

3. Voltage Test Points

Personnel protective equipment (PPE.), including voltage-rated gloves and leather glove protectors, must be used when measurements are made on circuits normally energized at voltages greater than 50 volts. Aside from safety glasses, no additional PPE. is required for measurements on power-limited voltage sources less than 50 volts. If voltage step-down devices are designed into equipment normally operating more than 50 volts, and with the reduced voltages available at test points, then the zero-voltage lockout/tagout confirmation measurements can be made at the

test points while using safety glasses and without using additional PPE. Preferably, the test points would be available at the equipment front panel.

A voltage step-down can be achieved using transformers. Three transformers would be required for three-phase power supply circuits.

A voltage step-down can also be achieved using resistive voltage dividers. The disadvantage of this approach is that heat would be continually released into the enclosure. Resistors chosen for this application should be wire-wound or equivalent in reliability (not metal film). They should have identical power ratings, selected as at least three times the anticipated continuous power dissipation as if the test point were connected to a solid ground. A 10:1 divider is suggested for this application, so that a 120-volt source would present 12 volts to a test point.

Level of Safety

Commercially off-the-shelf (COTS) components are used to assemble electrical equipment. These COTS components have all been examined by a Nationally-Recognized Testing Laboratory (NRTL) and are labeled or listed. Finally, when the COTS components are assembled into their final configuration, all systems must be reviewed and accepted by a representative of the Authority Having Jurisdiction (AHJ). It is by use of labeled or listed components such as switches, fuses, circuit breakers, and similar devices that safety of the electrical installation is assured.

Use of engineered voltage monitoring solutions for lockout/tagout follows the same safety pathway. ATC's UPA-100 "Universal Power Alert" is a commercial off-the-shelf device listed by UL, an NRTL. When installed under engineering control, and with the installation (and associated procedures) reviewed and accepted by a representative of the Authority Having Jurisdiction, the device is equal to switches and circuit breakers and conduits in affording personnel protection.

Installation of other means of engineered voltage monitoring solutions for lockout/tagout, including installed metering and voltage test points, follows a similar pathway. The major issue with these alternate devices is that they are not labeled or listed like the UPA-100 and therefore more engineering controls and AHJ reviews are required.

The initial topic in this document discussed *The Importance of Procedure and Timeliness*. Using procedures discussed under the second topic, *Engineered Voltage-Monitoring Systems*, the techniques discussed in this document are classified as Hazard Severity Category IV. This category is shown in the table below, which has entries typical of many versions of the same material available in the military and civilian sectors. Aside from the engineered aspects of each installation and the fact that the UPA-100 is UL listed if this is the chosen device, the basic reason lies in procedures. Since verification of voltage must occur first, followed by removal of

power and timely verification that voltage has been removed, the devices are, in effect, being tested each and every time they are used. Further, no periodic testing is required since they are repeatedly tested at each use. No other component of an electrical system is periodically tested, except for items like insulation tests for transformers and large motors.

Hazard Severity		
Category	Descriptive Word	Potential Consequences
I	Catastrophic	May cause death or system loss
II	Critical	May cause severe injury, severe occupational illness, or major system damage
III	Marginal	May cause minor injury, minor occupational illness, or minor system damage
IV	Negligible	Will not result in injury, occupational illness, or system damage

Routine Voltage Testing on De-Energized Equipment

It should be noted that careful technicians routinely apply meter leads to test for voltage on parts they know to be de-energized, such as equipment which has been unplugged or locked and tagged. While safety glasses are required for this and all electrical work, the technicians do not need additional PPE for this operation.

Attachment A (page 1 of 2)

TAKE NO CHANCES!

Know if the power is ON or OFF

AUTOMATIC TIMING & CONTROLS
DIVERSIFIED ELECTRONICS DIVISION

UPA-100

UNIVERSAL POWER ALERT

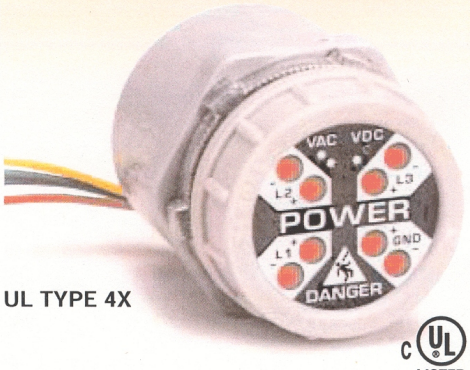

UL TYPE 4X

c UL us LISTED

FEATURES

- VERIFICATION OF ZERO ENERGY
- DETECTS SINGLE OR 3-PHASE AC VOLTAGE
- DETECTS DC OR STORED ENERGY
- REDUNDANT CIRCUITRY

OPERATION

With the green (GND) wire connected to earth ground, the eight detector UPA-100 visually **alerts to the presence of dangerous AC or DC** (Stored Energy) potentials occurring between any combination of the four monitored input lines (L1, L2, L3, GND). Two LED indicators are assigned to each input line and are designated "+" and "-". For each input line carrying an **AC potential** (bi-polar), both the "+" and "-" LEDs will be active. A **DC or Stored Energy potential** will illuminate the "+" LED for the positive line and the "-" LED for the negative line.

OSHA 1910.147 THE CONTROL OF HAZARDOUS ENERGY (Lockout/Tagout).

Following the application of lockout or tagout devices to energy isolating devices, all potentially hazardous stored or residual energy shall be relieved, disconnected, restrained, and otherwise rendered safe.

(d)(5)(ii)

If there is a possibility of reaccumulation of stored energy to a hazardous level, verification of isolation shall be continued until the servicing or maintenance is completed, or until the possibility of such accumulation no longer exists.

(d)(6)

"Verification of Isolation." Prior to starting work on machines or equipment that have been locked out or tagged out, the authorized employee shall verify that isolation and de-enegerization of the machine or equipment have been accomplished.

DIMENSIONS

INCHES

PANEL MOUNT

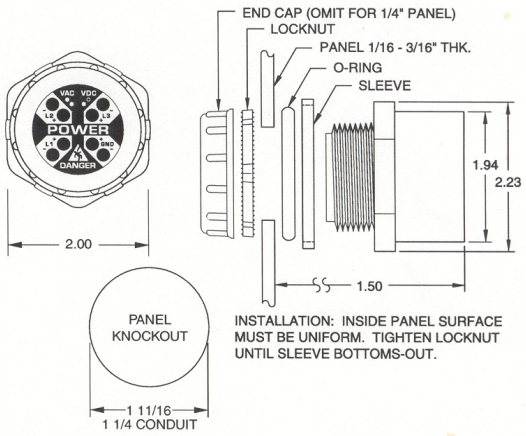

INSTALLATION: INSIDE PANEL SURFACE MUST BE UNIFORM. TIGHTEN LOCKNUT UNTIL SLEEVE BOTTOMS-OUT.

... an investment in safety

Attachment A (page 2 of 2)

SPECIFICATIONS

Ordering Information: UPA-100

Operational Range: AC SINGLE OR 3-PHASE: 40 to 750 VAC, 50/60/400 Hz, (LINE-TO-LINE or LINE-TO-GND)
DC OR STORED ENERGY: 30 to 1000 VDC, (LINE-TO-LINE or LINE-TO-GND)

Maximum Rated Voltage: 750VAC/1000VDC (LINE-TO-LINE or LINE-TO-GND)

Detection Thresholds: 29 VAC 3-Phase, 40 VAC SINGLE-Phase, 27 VDC (TYP CUTOFF)

INDICATOR FLASH RATES (L1, L2, L3, GND):

3-PHASE LINE-TO-LINE (VAC)	<29	30	120	240	480	600	750
FLASHES/SEC (TYPICAL)	0	1.3	4.2	5.8	7.3	8.0	8.8
DC OR STORED ENERGY (VDC)	<27	30	48	110	300	600	1000
FLASHES/SEC (TYPICAL)	0	1.6	2.5	4.5	6.9	8.8	9.1

GND DETECTOR THRESHOLDS (LEAKAGE ANY PHASE-TO-GROUND)

3-PHASE LINE-TO-LINE (VAC)	30	120	240	480	750
L1, L2, or L3 TO GROUND CONTINUITY (OHMS)	2M	2M	3M	5M	7M
DETECTOR INDUCED FAULT CURRENT (μA)	7	26	38	60	67

DETECTOR INDUCED FAULT CURRENT (PHASE-TO-GROUND SHORT)

3-PHASE LINE-TO-LINE (VAC)	30	120	240	480	750
0 OHM PHASE-TO-GROUND CURRENT (μA)	28	108	219	455	730

Power Consumption: 1.2 Watts @ 750 VAC (Approximately)

Temperatures
Operate: -20°C to +55°C
Storage: -45°C to +85°C

Enclosure: 105°C PVC, Totally Encapsulated for Environment Protection

Terminations: (4) 6ft, 18 AWG 1000V, UL-1452

Patent: U.S. PAT No. 6,703,938

AUTOMATIC TIMING & CONTROLS
DIVERSIFIED ELECTRONICS DIVISION
1827 Freedom Rd.
Lancaster, PA 17601
Phone: 717-295-0500
800-441-8245
Fax: 717-295-9536
www.ATCDiversified.com
Email: info@ATCDiversified.com