Options for LHC cryo upgrade: Excepts from poster by L. Tavian at LHC Beam Dynamics Workshop

P. Wanderer, BNL

December 14, 2004

(My thanks to Tom Taylor)

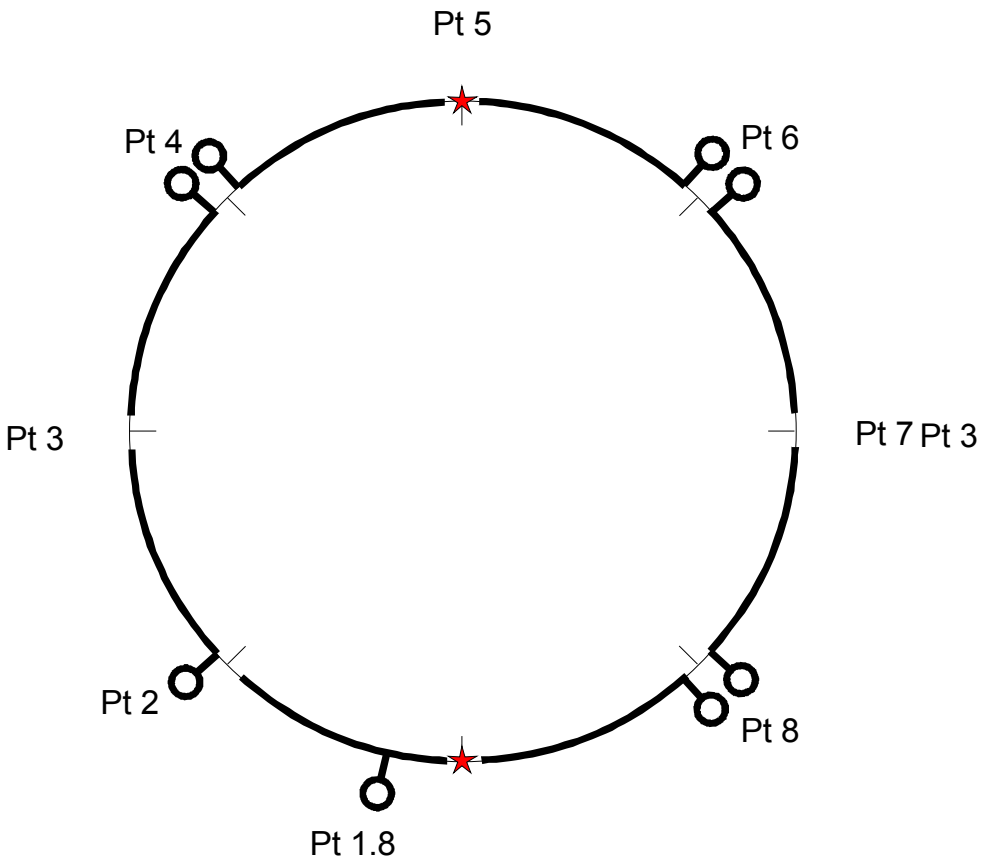

Scheme 1:
Present configuration

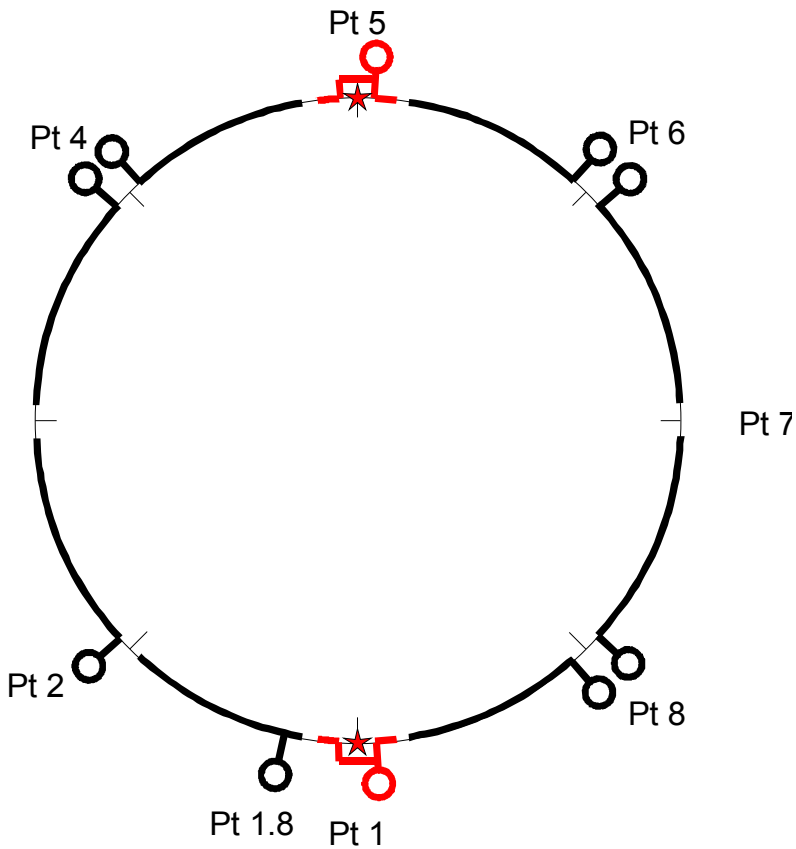

Scheme 2: Upgrade with
dedicated cryoplants
for inner triplet cooling

Scenario	Cryogenic architecture
A, A', A''	***Scheme 1*** 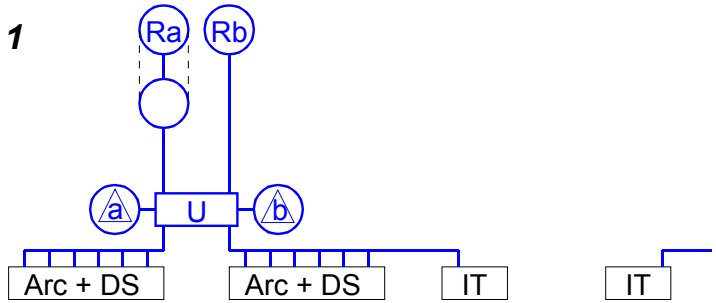
Bsb	***Scheme 2a*** 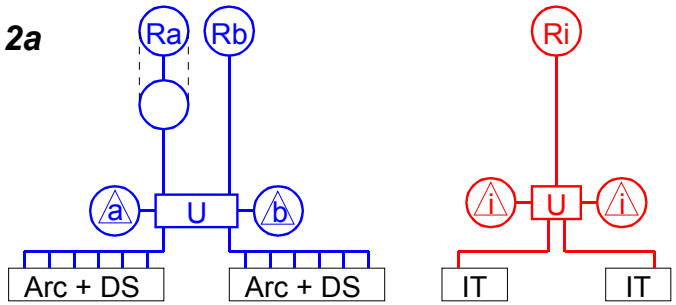
Bbb & B'	***Scheme 2b*** 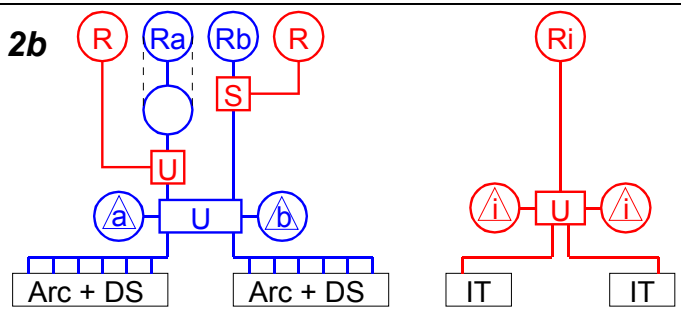

Legend

4.5 K refrigerator	R existing	R additional
1.8 K refrigeration unit	△ existing	△ additional
Underground interconnection	U existing	U additional
Surface interconnection		S additional

Scenario		E	I_b	n_b	σ_z	Luminosity
Ref.	Remarks	[TeV]	[mA]	[-]	[mm]	[cm-2.s-1]
A	Nominal	7	0.20	2808	77	1.00E+34
A'	Ultimate	7	0.30	2808	77	2.31E+34
A''	Modest upgrade	7	0.30	2808	38.5	4.63E+34
Bbb	With bunched beam	7	0.30	5616	38.5	9.25E+34
Bsb	With super-bunch	7	1029	1	75000	9.40E+34
B'	Strong bunches	7	0.48	2808	77	8.70E+34

Beam Parameters for Different LHC Upgrade Scenarios

Temperature level		Heat Load		LHC scenario					
				A	A'	A''	Bbb	Bsb	B'
				Nominal	Ultimate	Modest upgrade	With bunched beam	With super-bunch	Strong bunches
4.6 - 20 K		Synchrotron radiation	[W/m]	0.33	0.50	0.50	1.00	0.61	0.79
		Image current		0.36	0.83	2.35	4.69	0.11	2.07
		E-clouds		0.89	3.10	3.10	6.20	0.31	12.2
		Static		0.13	0.13	0.13	0.13	0.13	0.13
		Total		**1.71**	**4.56**	**6.08**	**12.0**	**1.16**	**15.2**
1.9 K	Arc + DS	Synchrotron radiation	[W/m]	0.001	0.001	0.001	0.002	0.001	0.002
		Image current		0.001	0.002	0.007	0.013	0.000	0.006
		E-clouds		0.009	0.031	0.031	0.062	0.003	0.122
		Resistive heating		0.10	0.10	0.10	0.10	0.10	0.10
		Beam-gas scattering		0.05	0.07	0.07	0.15	0.09	0.12
		Static		0.21	0.21	0.21	0.21	0.21	0.21
		Total		**0.37**	**0.41**	**0.42**	**0.53**	**0.40**	**0.55**
Inner Triplet		**Particle losses**	[W/m]	**4.80**	**11.1**	**22.2**	**44.4**	**45.1**	**41.8**

Specific Heat Load for the Different LHC Upgrade Scenarios

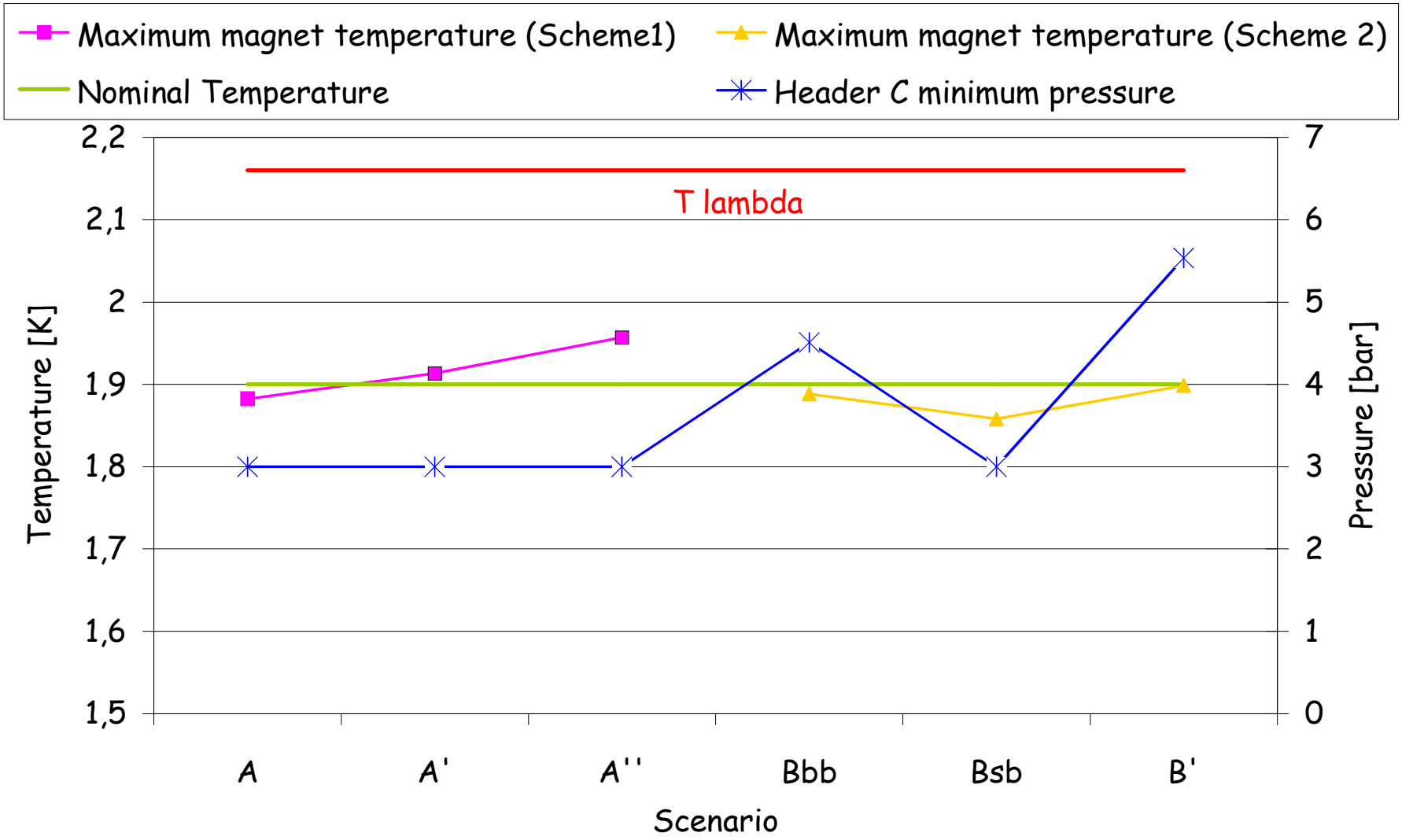
Maximum magnet temperature (Scheme1)
Maximum magnet temperature (Scheme 2)
Nominal Temperature
Header C minimum pressure
T lambda
Temperature [K]
Pressure [bar]
2,2
2,1
2
1,9
1,8
1,7
1,6
1,5
7
6
5
4
3
2
1
0
A
A'
A''
Bbb
Bsb
B'
Scenario

Scenario	Scheme #	Sector cryoplant					IT cryoplant	
		Rb	Ra	R	b	a	Ri	i
		[kW] @ 4.5 K	[kW] @ 4.5 K	[kW] @ 4.5 K	[kW] @ 1.8 K	[kW] @ 1.8 K	[kW] @ 4.5 K	[kW] @ 1.8 K
A	1	11	10	\	1,4	1,1	\	\
A'	1	18	15	\	1,8	1,3	\	\
A''	1	**22**	18	\	2,2	1,3	\	\
Bbb	2b	18	18	12	1,7	1,7	16	1,8
Bsb	2a	9	9	\	1,2	1,2	15	1,8
B'	2b	18	18	18	1,9	1,9	15	1,7

Bold: Require some upgrade on existing LHC cryoplant hardware

- Cold mass cooling: R&D is required for heat extraction above 10 W/m
- Beam screen cooling: additional studies on temperature profiles in the BS wall and in interconnection regions are needed.
- By adding and/or by upgrading cryoplants, cryogenics can cover the different upgrade scenarios but additional space at the surface and underground level has to be found for architecture scheme 2.
- Scenarios with super-bunch beams are more interesting for cryogenics.