The only official copy of this file is the one on-line on the Superconducting Magnet Division website. Before using a printed copy, verify that it is the most current version by checking the document issue date on the website.

Magnet Division Procedure

Procedure: SMD-AGS-3011

Revision: A

Superconducting Magnet Division

AGS Snake Magnet Upper Buffer Assembly

- Prepared by: Signature on File
- Cognizant Engineer: Signature on File
- Production Technician: Signature on File
- Production Section Head: Signature on File
- Cognizant Electrical Engineer: Signature on File
- Q. A. Approval: Signature on File
- ES&H Review: Signature on File

Revision History

Rev A: Initial Release

The only official copy of this file is the one on-line on the Superconducting Magnet Division website. Before using a printed copy, verify that it is the most current version by checking the document issue date on the website.

1 Scope:

This procedure describes the steps necessary for fabricating the upper buffer volume assembly prior to inclusion on the cold mass.

2 Applicable Documents:

RHIC-MAG-Q-1000	Procedure for Control of Measurement Test Equipment
RHIC-MAG-Q-1004	Discrepancy Reporting Procedure
RHIC-MAG-R-7227	Electrical Resistance Measurements
RHIC-MAG-R-7228	Coil Inductance & Q Measurements
RHIC-MAG-R-7242	Hypot Testing
RHIC-MAG-R-8853	Hypot Testing – Helical Coil Insulation Assembly
BNL Dwg. 22010520	Cold Mass Assembly
BNL Dwg. 12019042	AGS Cold Snake Magnet Wiring Diagram

3. Requirements:

3.1 Material & Equipment

Black Felt Tip Pen	BNL Stock No. S-23757
Tie Wrap	BNL Stock No. A-59829
Insulated Gloves	BNL stock No. K-63028

3.2 Safety Precautions:

3.2.1 Operators shall wear:

- Insulated gloves when handling fiberglass insulating loom to prevent skin irritation.
- Disposable gloves while handling acetone or ethanol.

NOTE

Disposable gloves only give marginal protection to most solvents used and should only be considered as protection from incidental contact/exposure. If the glove is contaminated, it should be removed and a new glove put on.

3.2.2 Some of these electrical test procedures have specific safety requirements. The technicians performing these specific tests shall rigorously follow all the safety requirements listed as well as those prescribed by the BNL ES&H standard.

The only official copy of this file is the one on-line on the Superconducting Magnet Division website. Before using a printed copy, verify that it is the most current version by checking the document issue date on the website.

3.2.3 The technicians shall be instructed by their cognizant technical supervisor in the operation of the required test equipment and these electrical testing procedures. They shall be familiar with the latest revision of the applicable documents referenced in section 2. In addition, some of these tests require the technician to have special training. A list of qualified personnel shall be maintained with the training coordinator.

3.2.4 Hypot testing poses a Class "C" electrocution hazard. At least two properly trained technicians must be present to perform this testing. When testing, a trained technician shall be stationed at any point the item under test is accessible to unauthorized people, and barriers shall be set up. Signs shall be posted reading "DANGER HIGH VOLTAGE" and warning lights shall be turned on.

3.2.5 Specific steps of this procedure contain electrical and mechanical assembly operations that impact the environment. Prior to performing these steps, personnel shall complete the applicable facility specific environmental training.

4 Procedure:

4.1 IFS Assemblies "A" and "B"

4.1.1 Inspect the internal surfaces of each of the two IFS tube sub-assemblies, P/N 22010610, for burrs that could compromise the electrical insulation of the wires to be inserted or that could prohibit insertion of the wire bundle and loom within the tube. Notify cognizant engineer if burrs cannot be removed.

4.1.2 Install a temporary Teflon guide block with groove (see Appendix 1) into the large diameter tube at the "warm end" (the end that will be welded to the cryostat wall) of the IFS tube sub-assembly. The wires will enter the IFS sub-assembly from this end, following the groove in the Teflon guide. This will allow easier entry into the small diameter tube.

4.1.3 Tie a cord onto the "warm end" of the bundle of wires and loom designated "IFS A" P/N 22010403, that is to be inserted into the IFS tube. This bundle will be inserted into the IFS line that becomes the left side assembly (P/N 22010695-01). The cord must be as long as the full length of the IFS sub-assy plus 24 inches.

4.1.4 Thread the cord into the IFS sub-assy from the "warm end".

4.1.5 Pull the wire bundle and loom bundle into the tube. Pull far enough to have 42" inches protruding from the tube fitting at the "cold end" as indicated on drawing 22010695.

The only official copy of this file is the one on-line on the Superconducting Magnet Division website. Before using a printed copy, verify that it is the most current version by checking the document issue date on the website.

4.1.6 Remove the pull cord from the wire bundle.

4.1.7 Perform continuity test on each wire in bundle.

4.1.8 Perform Hypot test of all wires to tube. Test sensor wires @ 500 volts. Test all other wires @ 5kV.

4.1.9 Make bends in the IFS sub-assy in accordance with drawing 22010695-01; mark with part number for later identification.

4.1.10 Repeat steps 4.1.2 through 4.1.9 for the -02 IFS sub-assy using the wire bundle designated "IFS B" P/N 22010404. Note that the bending of the –02 assembly is a mirror image. Mark correct part number on assembly.

4.2 Install the four spring clips inside the buffer channel at the locations indicated on drawing 22010564. Tack weld the clips to the buffer.

4.3 Install the two cryo-stability heater assemblies onto the hangers provided inside the upper buffer channel. The resistors on the boards should face toward the middle of the channel.

4.4 Feedthrough Installation

4.4.1 Obtain the 400 Amp power lead feedthrough, P/N 22010534. This feedthrough has <u>three</u> pins with superconductor soldered into each pin. It will be welded to the <u>left side</u> of the upper buffer channel (as viewed from the channel's lead end).

4.4.2 "Dry fit" the feedthrough into the short tube stub located near the longitudinal center of the channel. Note and mark the correct rotational orientation of the feedthrough as shown on drawing 22010564.

4.4.3 Obtain the 50 Amp power lead feedthrough, P/N 22010533. This feedthrough has <u>four</u> pins with superconductor soldered into each pin. It will be welded to the <u>right side</u> of the upper buffer channel (as viewed from the channel's lead end).

4.4.4 "Dry fit" the feedthrough into the short tube stub located near the longitudinal center of the channel. Note and mark the correct rotational orientation of the feedthrough as shown on drawing 22010564.

4.4.5 Obtain the warm-up heater feedthrough, P/N 22010532. This feedthrough has four solid copper pins. It will be welded to the right side of the upper buffer channel near the lead end.

The only official copy of this file is the one on-line on the Superconducting Magnet Division website. Before using a printed copy, verify that it is the most current version by checking the document issue date on the website.

4.4.6 "Dry fit" the feedthrough into the short tube stub located near the lead end of the channel. Note and mark the correct rotational orientation of the feedthrough as shown on drawing 22010564.

4.4.7 "Dry fit" the two IFS assemblies, now formed to their respective shapes, into the holes on either side of the upper buffer channel near the lead end. Note and mark the correct rotational orientation of each assembly as shown on drawing 22010564.

4.4.8 Weld the three feedthroughs and the IFS assemblies into the upper buffer volume.

4.5 Electrical Tests After Welding

4.5.1 Perform continuity tests on each feedthrough and on the two IFS assemblies just welded.

4.5.2 Perform Hypot tests at 5kV on each feedthrough.

4.5.3 Perform Hypot tests on the wires within the two IFS assemblies. Test sensor wires @ 500 volts. Test all other wires @ 5kV.

4.6 Electrical Wiring

4.6.1 Locate the (4) 30 AWG wires in IFS "B" that are to be connected to the cryo-stability heaters. One circuit uses blue-jacketed wires, the other circuit uses yellow-jacketed wires.

4.6.2 Route the wires under the three (of four) spring clips furthest from the lead end, within the half round recess provided. NOTE: the yellow wires go to the lead end heater. Tie the wires to the top of the underside of each clip's recess using Kevlar cord. Secure the knot using epoxy.

4.6.3 Tag the wires on the outside of the IFS for identification (polarity is arbitrary).

4.6.4 Solder the yellow wires to the lead end heater and the blue wires to the non-lead end heater in accordance with Schematic 12019042, removing excess wire length. NOTE: the polarity of the connections does not matter.

4.6.5 Locate (8) out of the (16) 32 AWG wires for temperature sensors within IFS "B". These (8) will be used for the sensors that measure the temperature of the exit gas within the vent tube.

4.6.6 Route these (8) wires under the half round recess in three of the four spring clips. Tie the wires to the underside of each clip's recess alongside the heater wires,

The only official copy of this file is the one on-line on the Superconducting Magnet Division website. Before using a printed copy, verify that it is the most current version by checking the document issue date on the website.

using Kevlar cord. Secure the knot using epoxy. Route wires out top of buffer in crescent-shaped cutout.

4.6.7 Route the superconductor harnesses from the inside of the 400A and the 50A feedthroughs through the recess in all four spring clips, locate the harness as low in the recess as practical. Tie the wires to the clips using Kevlar cord and secure the knot using epoxy. These wires will exit the buffer volume at the lead end and will point downward through the shell upon exit.

4.6.8 Route the remaining wires in both IFS groups under the first spring clip along with the superconductors. Tie the wires to the clip and secure the knot using epoxy.

4.7 Electrical Tests After Wiring

4.7.1 Perform resistance check of LE and NLE cryo-stability heater circuits.

4.7.2 Perform continuity test on all other wiring.

4.7.3 Perform Hypot tests at 5kV on each feedthrough and on each cryo-stability heater.

4.7.4 Perform Hypot tests on the wires within the two IFS assemblies. Test sensor wires @ 500 volts. Test all other wires @ 5kV.

4.8 Carefully, but tightly, coil up the wires at the “warm end” of the IFS assemblies. Locate the wires within the large diameter tubes, placing them far enough down inside so that they cannot be damaged during subsequent welding of the pressure caps.

4.9 Loosely coil up the wires that exit the lead end of the buffer volume, then temporarily restrain this coil to the buffer volume. These wires must be inserted through a hole in the shell at the time the upper buffer is installed on the cold mass.

The only official copy of this file is the one on-line on the Superconducting Magnet Division website. Before using a printed copy, verify that it is the most current version by checking the document issue date on the website.

5 Quality Assurance Provisions

5.1 The Quality Assurance provisions of this procedure require that the technician be responsible for performing all assembly operations in compliance with the procedural instructions contained herein and the recording of the results on the production traveler.

5.2 The technician is responsible for notifying the technical supervisor and/or the cognizant engineer of any discrepancies occurring during the performance of this procedure. All discrepancies shall be identified and reported in accordance with RHIC-MAG-Q-1004.

5.3 Measuring and test equipment used for this procedure shall contain a valid calibration label in accordance with RHIC-MAG-Q-1000.

6 Preparation For Delivery

N/A

The only official copy of this file is the one on-line on the Superconducting Magnet Division website. Before using a printed copy, verify that it is the most current version by checking the document issue date on the website.

Appendix 1 – Teflon Guide Block
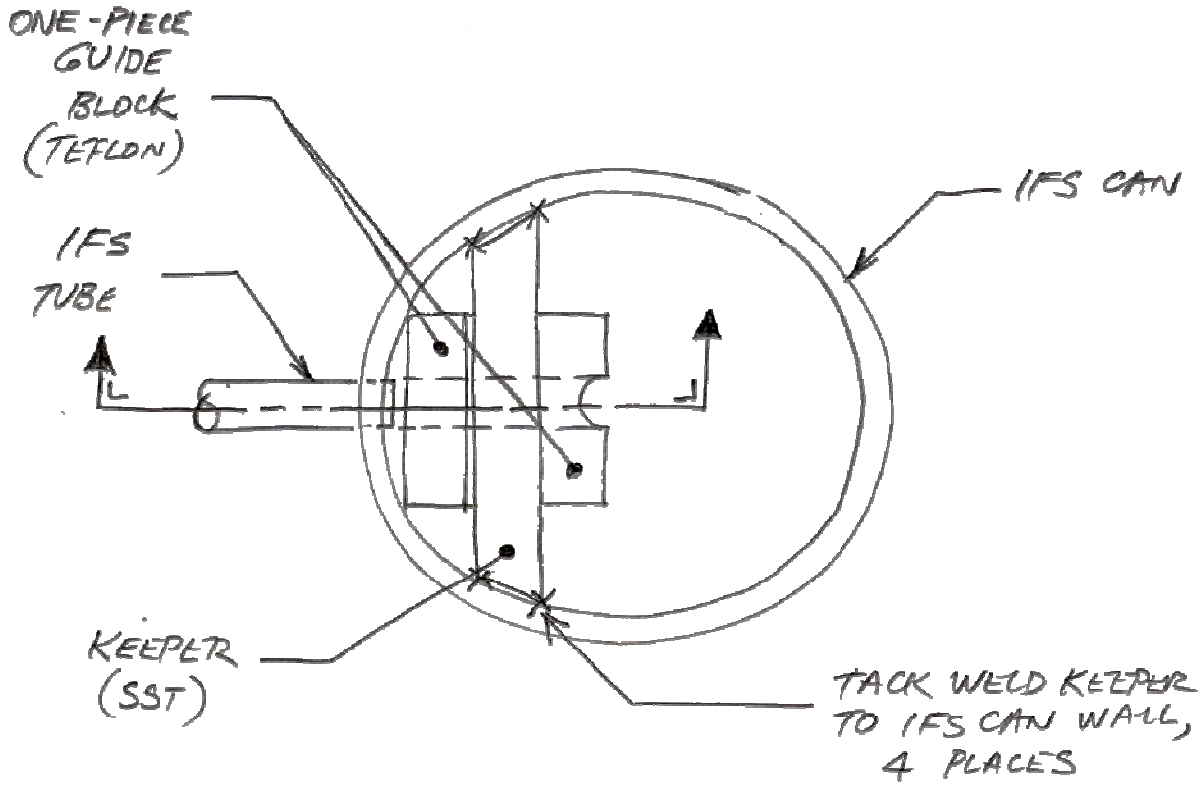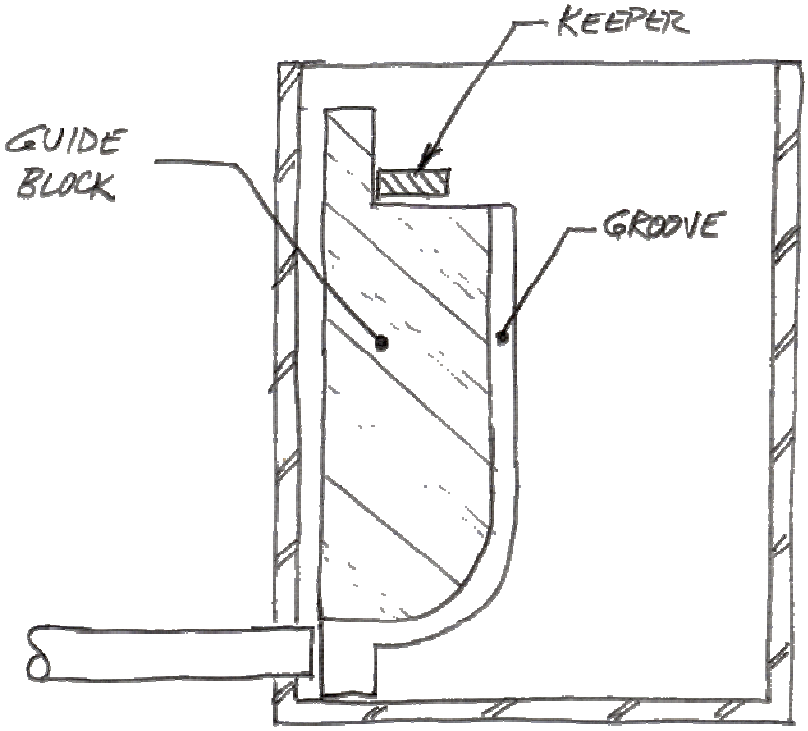
To be inserted into IFS can during cable pulling