THE EFFECTS OF HF PARTIAL PRESSURE AND PRESSURE GRADIENTS ON YBCO GROWTH IN THE BaF_2 PROCESS

Vyacheslav F. Solovyov, Harold J. Wiesmann and Masaki Suenaga
Materials Science Division, Brookhaven National Laboratory, Upton, NY 11973, USA

ABSTRACT

This presentation is an analysis of a partial vacuum atmosphere reactor for ex-situ processing of YBCO coated tapes. In this discussion we concentrate on the influence of macroscopic (cm-scale) and local (mm-scale, next to the film surface) HF concentration gradients on the YBCO film quality. Two of the undesirable effects of lateral HF gradients we consider are growth suppression and growth reversal. Experimental evidence is presented that growth suppression and reversal are detrimental for the structural quality of YBCO layers.

INTRODUCTION

Application of YBCO coated conductors requires a fast and inexpensive deposition technique, capable of producing high-quality YBCO layers 5 – 10 μm thick [1]. In this respect the ex-situ or barium fluoride process seems attractive. The process is not sensitive to the deposition rate and long pieces of tape may be processed in a batch mode. However, it turns out that traditional ex-situ reactor, which operates at atmospheric pressure and low gas flow is unsuitable for processing of long pieces of tape [2,3] due to severe inhomogeneity of the growth rate. In the BaF_2 process HF is released as a result of the following reaction:

$$\text{Y-Ba-Cu-O-F(precursor)} + H_2O = \text{YBCO} + 2HF \qquad (1)$$

which is basically the conversion of an oxy-fluoride precursor into YBCO. It was shown that rate of reaction (1) is determined by removal of HF by both gaseous convection and diffusion. The absolute value of HF partial pressure, $P(HF)$, on the growth front is determined by equilibrium condition $P(HF)/P(H_2O)^{1/2} = K$, where K is the equilibrium constant of reaction (1). We have constructed the following equation for YBCO growth rate G [3,4]:

$$G = A\, P(H_2O)^{1/2}/P_t \qquad (2)$$

where P_t is the total pressure in the reactor and A is a geometrical factor which describes the impedance of HF out-diffusion from the film surface. Eq. (2) demonstrates that ex-situ process allows a great degree of control over the reaction (1) kinetics. In what follows we will discuss some implications of our model of the ex-situ process, primarily focusing on influence of $P(HF)$ gradients on the growth process.

EXPERIMENT

YBCO precursor films were deposited by vacuum evaporation of Y, BaF_2 and Cu. Details of the deposition process may be found elsewhere [4]. We used a partial vacuum

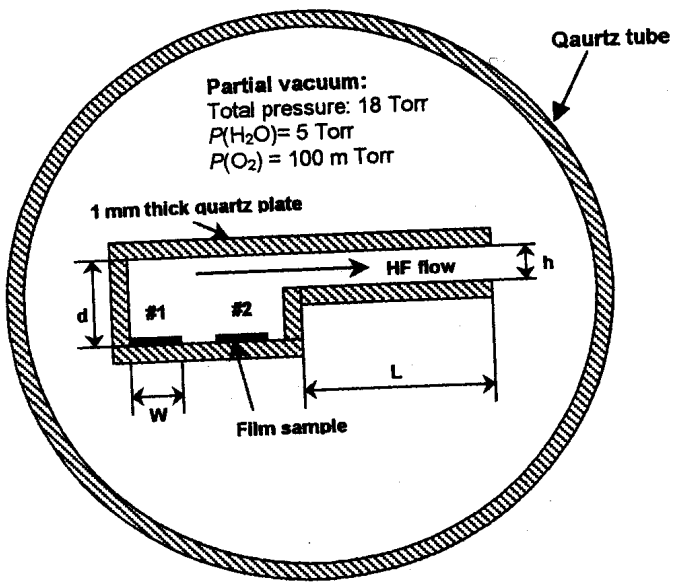

Fig. 1. Schematic drawing of the restriction design used for ex-situ processing in the partial vacuum reactor.

reactor for the ex-situ processing of the precursor films. The reactor consisted of 1.6 m long quartz tube inside a tubular furnace. A mechanical pump was used to pump gases through the tube. Electronic mass flow and pressure controls maintained the necessary processing atmosphere composition. According to Eq. (1) a partial vacuum reactor operated at low absolute pressure would allow much higher growth rates than an atmospheric one. However, *c*-axis epitaxial YBCO crystallization requires $G < 1$ nm/s. To suppress rapid HF out-diffusion in a reduced atmosphere we utilized the concept of a mechanical restriction. The restriction was a small apparatus constructed from quartz and designed to fit inside the quartz tube in the processing furnace. Fig. 1 is a schematic representation of the restriction design shown in cross section. The HF flows from the film surface into the furnace through the channel formed by the quartz plates. This geometry reduces geometrical factor A in Eq. (2) by h/L, compared to the case of unrestricted HF diffusion from the growing film surface. We typically used L= 20 mm, W = 3 mm, d =1 – 2 mm, and h = 1 mm and the growth rate was reduced by a factor of 20. By changing P_t or h we could control the average growth rate in the range of 0.05 – 2 nm/s. We used high-temperature in-situ resistivity measurement as a way to monitor the growth process; details of the technique were published elsewhere [3].

RESULTS AND DISCUSSION

As an example how lateral gradients can influence the film growth we simultaneously recorded in-situ conductivity $\sigma(\tau)$ vs. processing time for two samples, shown in Fig. 1 as sample #1 and sample #2, the films were 1 μm thick. The samples were processed under the conditions: P_t = 18 Torr, $P(H_2O)$ = 5 Torr, with restriction dimensions d = 2 mm, L = 20 mm, and h = 1 mm. This is a model case, which illustrates the importance of lateral gradients for

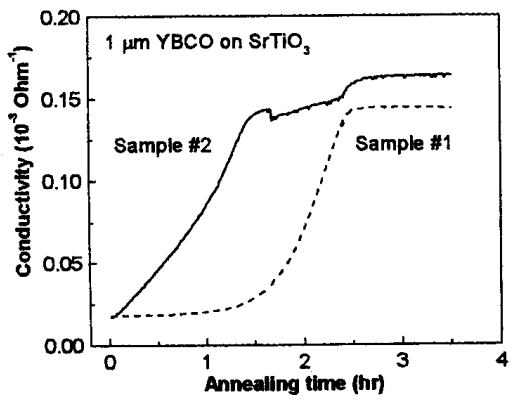

Fig. 2. $\sigma(t)$ curves for 1 μm thick film samples labled as #1 and #2 in Fig. 1. P_t = 18 Torr, $P(H_2O)$ = 5 Torr, L = 20 mm, h = 1 mm, d = 2 mm.

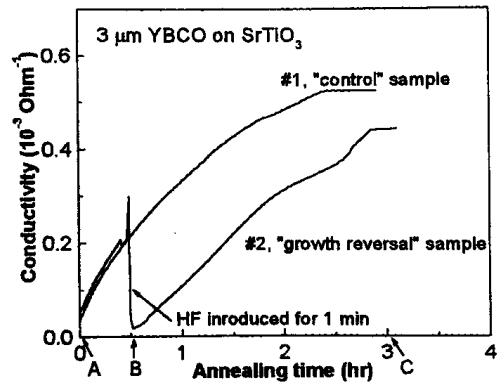

Fig. 3. Results of growth reversal of 3 μm thick film. Processing conditions are the same as that in caption to Fig.2

processing of long samples. The resulting conductivity versus time curves are shown in Fig. 2. It is observed from the figure that sample #2 starts to grow first and almost completely inhibits the growth of sample #1, which is located "upstream" with respect to the first sample. Characterization of samples #1 and #2 has shown that some degradation of superconducting properties has occurred for sample #1, with J_c (77 K) = 0.7 MA/cm^2 for sample #1 while J_c (77 K) = 1.5 MA/cm^2 for sample #2. We attribute this to growth suppression of sample #1 to the HF vapor produced by sample #2.

To clarify the role of HF in the processing atmosphere we performed a set of experiments where film growth was measured in an atmosphere artificially enriched with HF. HF vapor was admitted into the reactor though a throttle valve. Changing temperature of the salt and by varying the throttle valve orifice we could vary the HF partial pressure in the reactor. However, the actual value of P(HF) was unknown. The influence of HF vapor pressure on 3 μm thick film growth is demonstrated in Fig. 3. We kept the restriction dimensions and processing conditions the same as in the previous experiment. All of the samples were placed in the position labeled #1 in Fig.1. The figure compares two $\sigma(t)$ curves. Sample #1 or "control sample" was processed in atmosphere with no artificially introduced HF. The sample #2 or "growth reversal" was processed in atmosphere free of the introduction of HF for 30 minutes. This HF free time period is labeled A–B on the abscissa. After 30 minutes HF vapor was introduced for 1 min, labeled point B in the figure. After the introduction of HF we observed a steep drop of the sample #2's conductivity that we associate with the action of HF vapor. X-ray analysis of similar samples quenched before and after point B show that HF vapor completely reversed the growth and that all of the YBCO that was present in the growing film had been converted into a fluorinated compound, which was practically indistinguishable from the original precursor. After HF vapors were turned off, the conductivity of the "growth reversal" sample started to increase, indicating reentrant YBCO growth. This period of reentrant growth is labeled B–C on the abscissa. We interpret this result as evidence of the reversibility of reaction (1).

As can noticed from Fig. 3 the slope of the $\sigma(t)$ curve after point B is different from that slope before point B and that of the control sample. Also the final conductivity, $\sigma(t)$ at point C, of the "growth reversal" sample is lower than that of the "control" sample. This implies that YBCO crystallization during the regrowth phase has lower structural quality

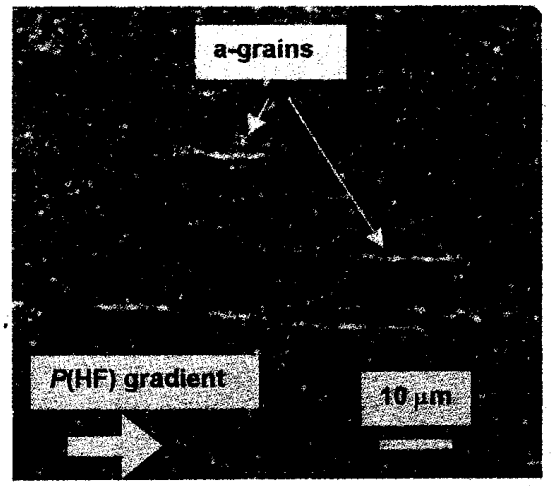

Fig. 4. Optical micrigraph of 1 μm YBCO film processed under lateral P(HF) gradient. Note uniform orientation of a-grains.

than the YBCO layer originally present. X – ray analysis of such samples indicated that after the reversal and regrowth, YBCO layers, which were originally completely *c*-oriented, had a high content of *a*-oriented and random grains. Taking into account presented data we conclude that reversal and retardation of reaction (1), though possible, results in degraded epitaxy of the YBCO regrown layer.

In the discussion above we considered situations where HF vapor completely stops or reverses the growth with negative consequences for superconducting properties. An interesting film growth case is one where there exist large lateral HF gradients, parallel to the film surface, but where the absolute magnitude of P(HF) is insufficient to completely suppress or reverse the YBCO growth over any portion of the precursor film. This condition can be realized if $d << W$ referring to Fig. 1. Samples grown under such a condition have a low content of *a*-oriented and random grains over a wide range of processing parameters and have J_c (77 K) $\approx$ 2 MA/cm^2 as compared with 1 – 1.5 MA/cm^2, a typical value. An interesting feature of such samples is that *a* grains, very few in number, are directed along the P(HF) lateral gradient or direction of HF out-flow, as shown in Fig. 4. Fig. 4 is 1 μm thick sample processed the same way as in the previous examples, except d = 0.5 mm. This sample had a J_c (77 K) = 2.2 MA/cm^2. We explain this observation as sensitivity of epitaxy to the gradient of the chemical potential of reaction (1). Here $\nabla\mu = \nabla kT\ln(P(\mathrm{HF})/P_e(\mathrm{HF})) \propto \nabla P(\mathrm{HF})$, where P and P_e are the actual and equlibrium HF partial pressure values. Since an YBCO grain is capable of fast growth along the *ab* plane, it would tend to nucleate so that *ab* plane is directed along gradient of chemical potential. Normally the P(HF) gradient is normal to the film surface thus favoring nucleation *a*-oriented grains. In this geometry the substantial lateral component of $\nabla\mu$ gives *c*-oriented grains an advantage.

REFERENCES

[1] V. F. Solovyov, H. J. Wiesmann, L-J. Wu, M. Suenaga, and R. Feenstra, IEEE trans. on Appl. Supercond., **9**, pp 1467-1470 (1999).
[2] R. Feenstra *et al.*, unpublished.
[3] V.F. Solovyov H. J. Wiesmann, and M. Suenaga, Physica C , **353**, pp 14-22 (2001).
[4] V. F. Solovyov, H. J. Wiesmann, L-J. Wu, and M. Suenaga, to be published in IEEE trans. on Appl. Supercond., as proceedings of ASC-2000.