Optically-Pumped Polarized H $^-$ Ion Source for RHIC Spin Physics

A.Zelenski[1,2], J.Alessi[1], B.Briscoe[1], G.Dutto[3], H.Huang[1], A.Kponou[1], S.Kokhanovski[2], V.Klenov[2], A.Lehrach[1], P.Levy[3], V.LoDestro[1], Y.Mori[4], M.Okamura[5], D.Raparia[1], J.Ritter[1], T.Takeuchi[5], G.Wight[3], V.Zoubets[2]

1 - Brookhaven National Laboratory, USA
2 - INR, Moscow, Russia
3 - TRIUMF, Canada
4 - KEK, Japan
5 - RIKEN, Japan

PST 2001

Polarized proton collisions in RHIC

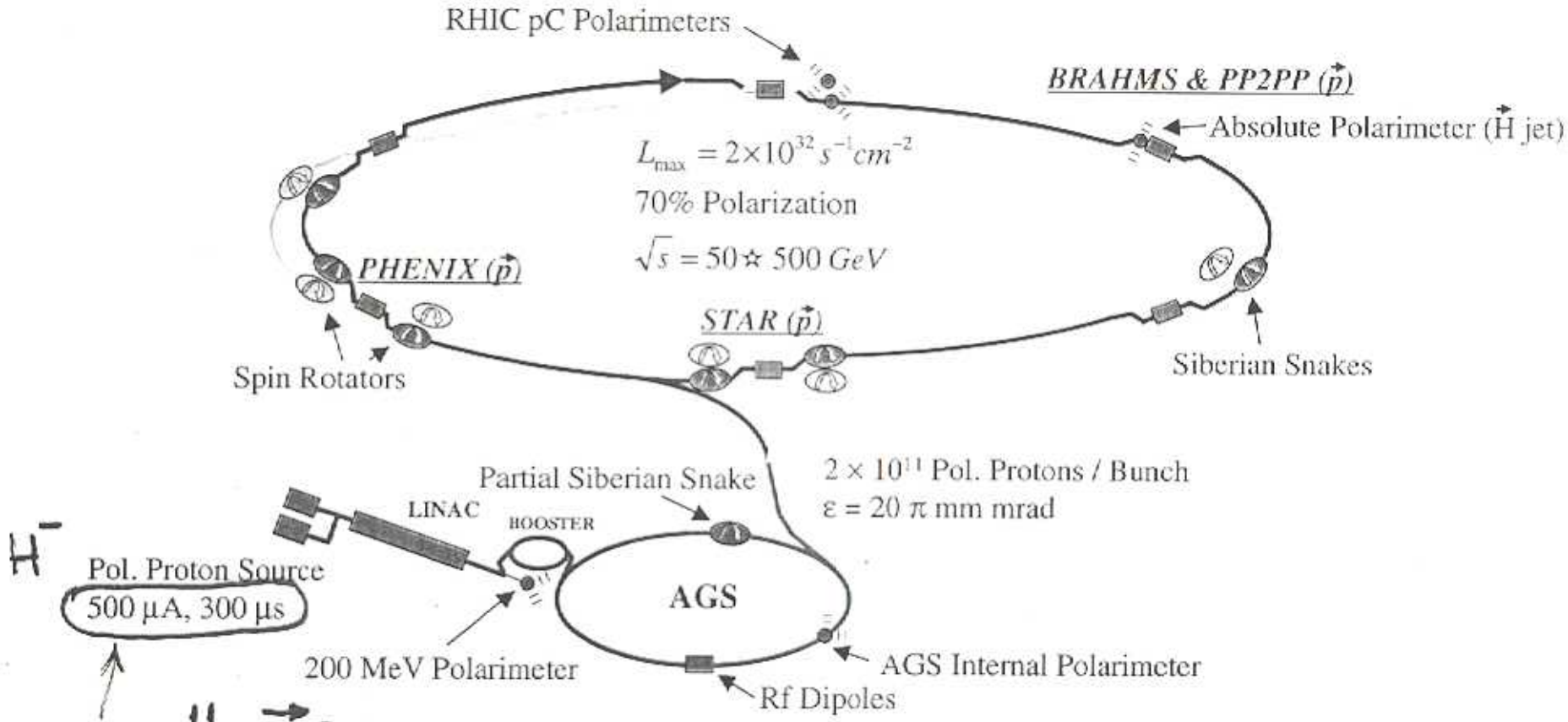

$9\cdot10^{11}$ $\vec{H}^-$ / OPPIS pulse

→ $4\cdot10^{11}$ OUT OF LINAC ⟶ ~200 μA × 300 μs

→ $2\cdot10^{11}$ IN RHIC

BROOKHAVEN NATIONAL LABORATORY

The polarized RHIC injector layout

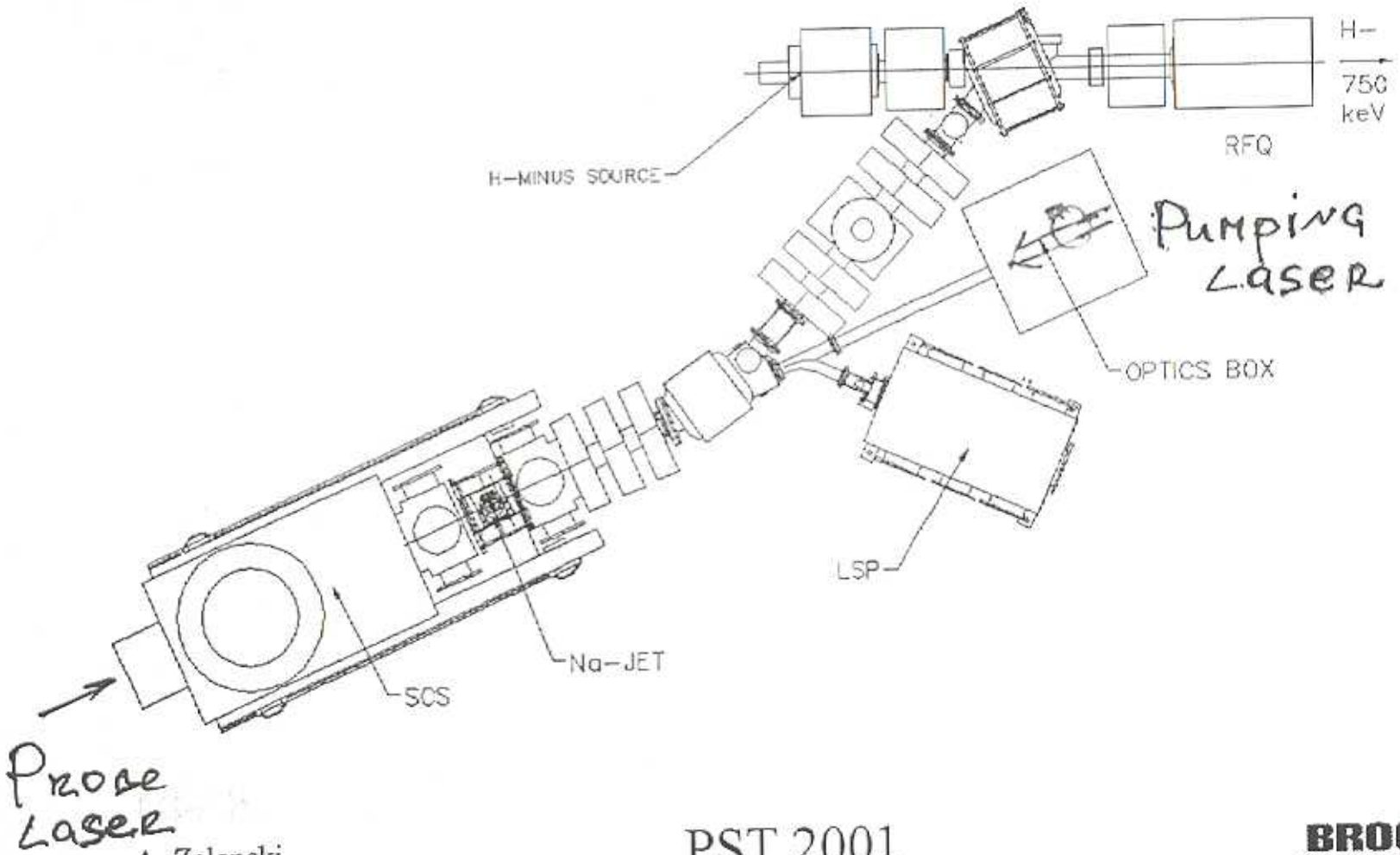

OPPIS INJECTOR

1. **Reliability.**
   Maintenance. Downtime. 80%
   Backup.

2. **Stability.**
   Current fluctuations, drift. | need some
   Sparking. | more work
   Constant polarization.

3. **Performance.**
   Current 200 uA at 200 MeV. good
   Polarization > 75% at 200 MeV. good

4. **Control and monitoring.**
   Polarization direction. good
   On-line polarization monitoring. good

18 GHz → 28 GHz ECR H^+

ECRFIGUR.PS
.DWG
.DSK

A new CPI tube EIK - VKQ2453
29.2 GHz – 1.2 kW cw

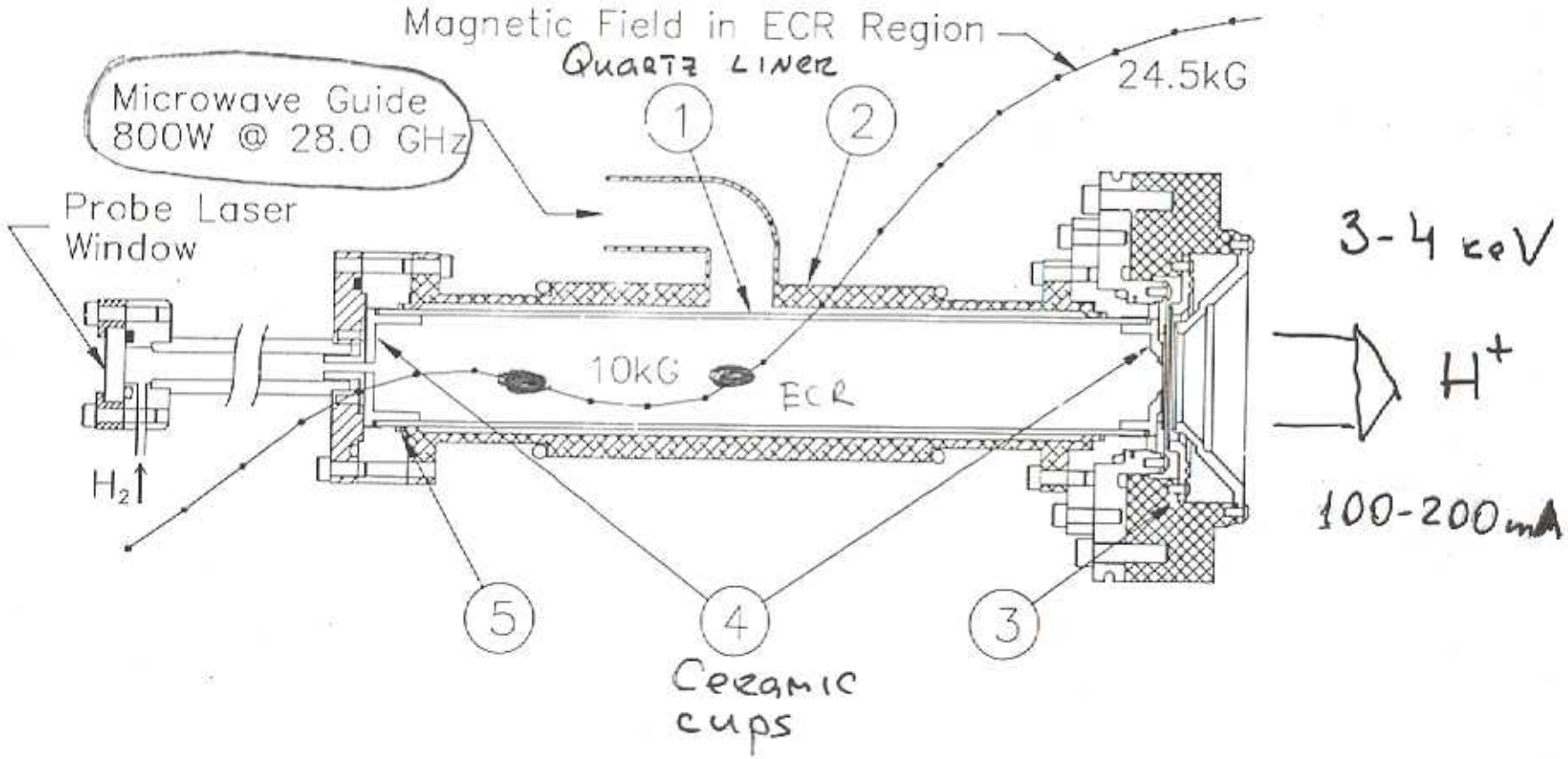

The TRIUMF OPPIS ECR primary proton source

BNL OPPIS SODIUM JET IONIZER CELL

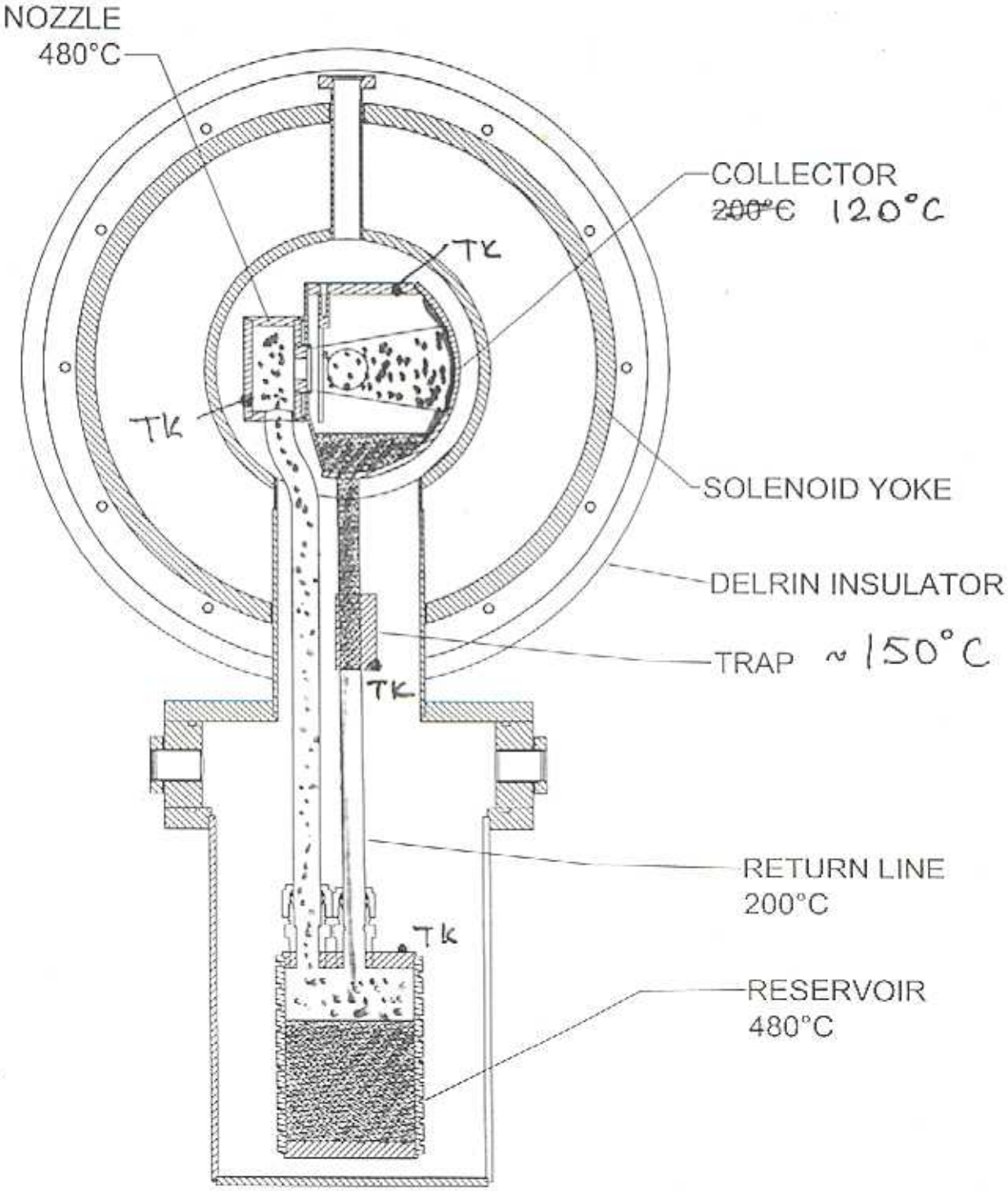

SODIUM – JET IONIZER CELL FEATURES

1. Low sodium losses for a large (3.0 cm) cell aperture diameter

2. The ionizer cell can be biased to - 32.0 kV, for producing of a 35.0 keV H^- ion beam ready for injection to RFQ

3. The H^- polarization is higher due to:

a). Na vapor is completely confined within 1.4 kG ionizer magnetic field

b). Na vapor density in the Rb neutralization cell is reduced

c). energy separation of the ions produced outside the ionizer cell

d). energy for the spin-transfer collisions can be set optimal for efficient polarization (about 3.0 keV) transfer and ionization without the current losses

200 MeV polarimeter upgrade

SCINT-
1.0x0.5x0.25

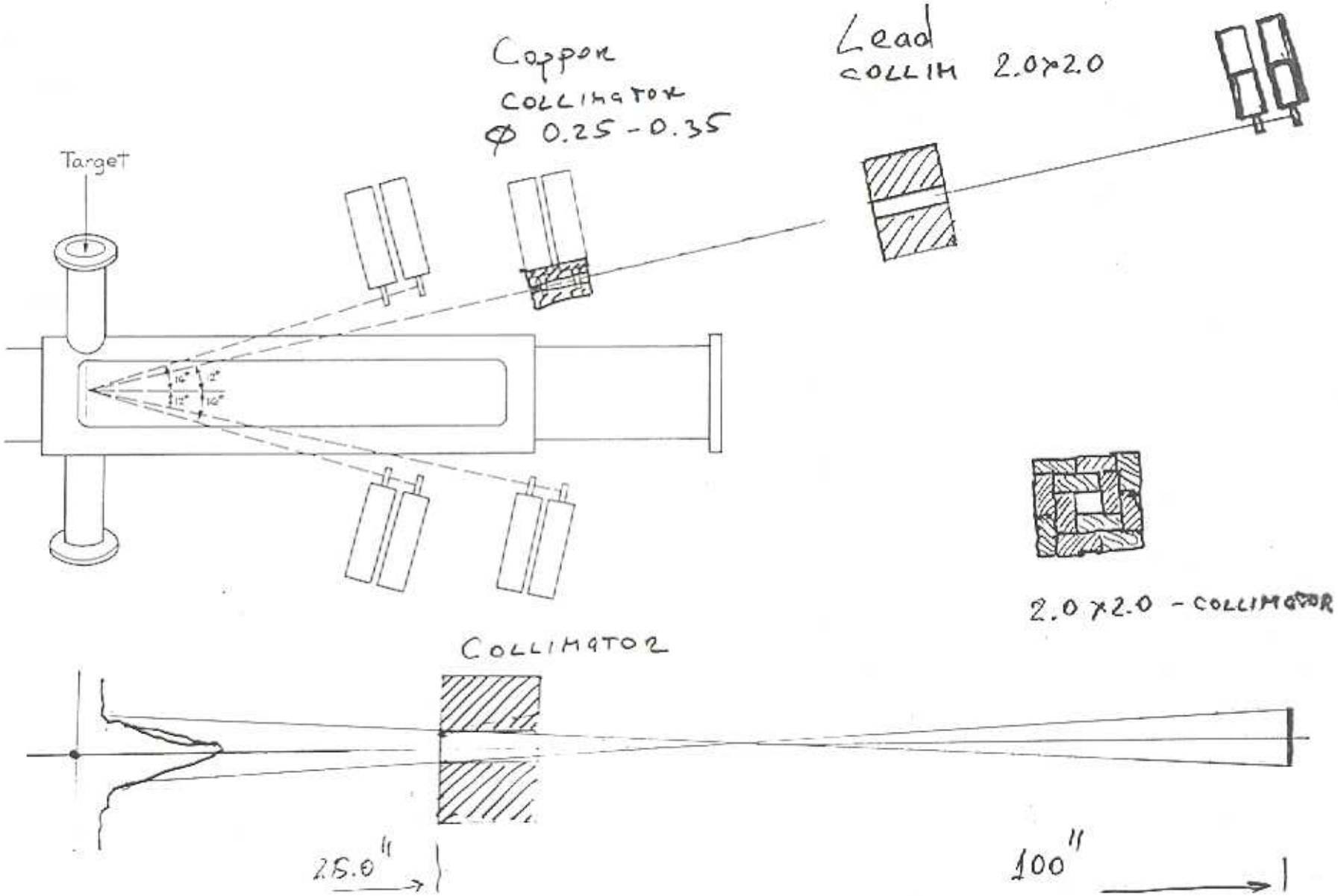

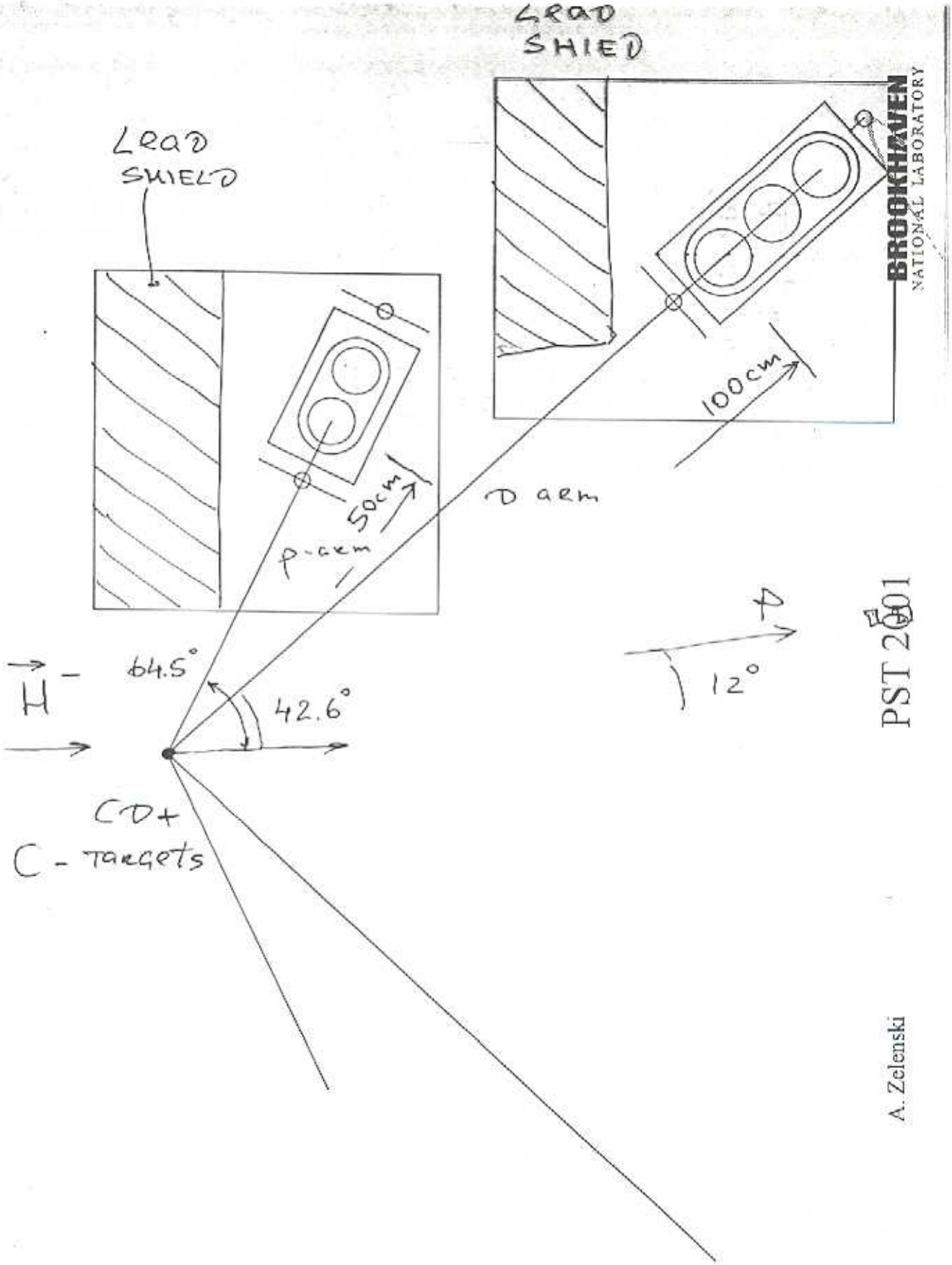

BROOKHAVEN NATIONAL LABORATORY

A. Zelenski

Target scan

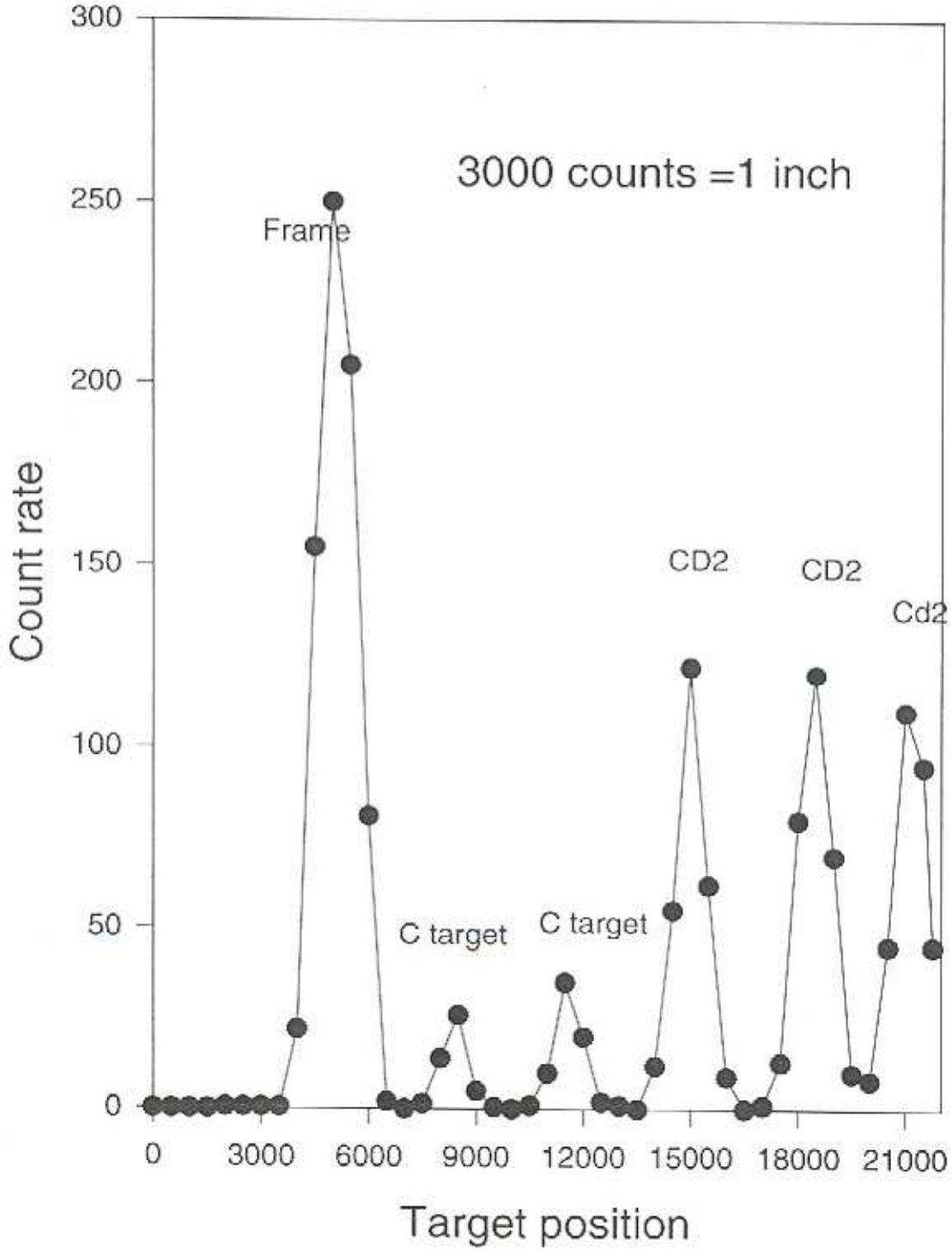
3000 counts =1 inch
Frame
C target
C target
CD2
CD2
Cd2
Count rate
Target position
300
250
200
150
100
50
0
0
3000
6000
9000
12000
15000
18000
21000

Spin-Rotator **Solenoid Field Scan**

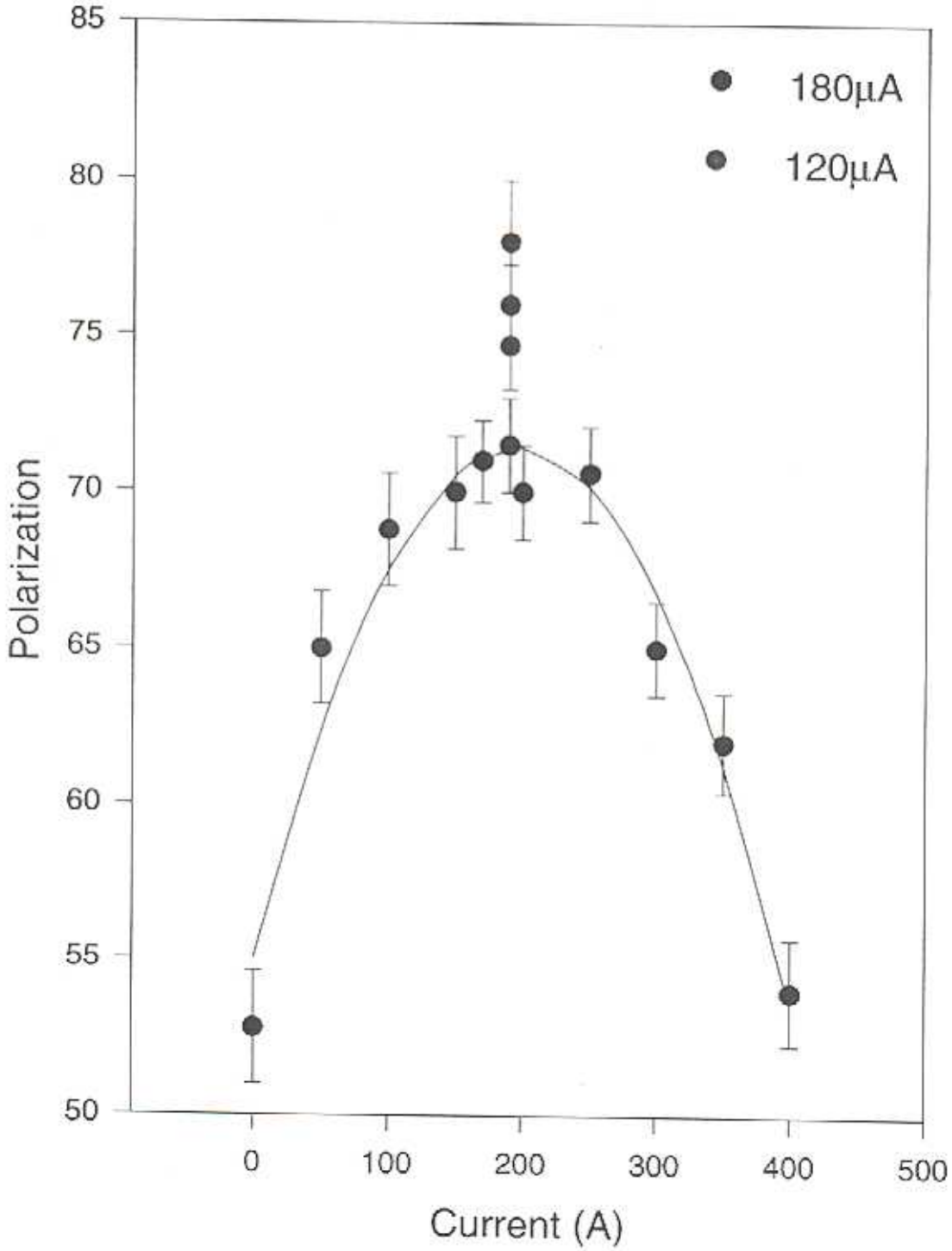

200 MeV POLARIMETER(12 degree-accidental)

STATUS:

PROCESSING

199

START | STOP | SAVE | EXIT

READING

PULSE	LEFT	RIGHT	CLK+	CLK-	POL.	ACC_L	ACC_R
57	139.0	31.0	1336.0	0.0	-0.0253833	0.0	2.0
58	49.0	97.0	0.0	1339.0		0.0	1.0
59	137.0	34.0	1336.0	0.0	-0.7592347	3.0	0.0
60	36.0	94.0	0.0	1344.0		1.0	0.0
61	136.0	40.0	1336.0	0.0	-0.8227953	0.0	1.0
62	35.0	91.0	0.0	1338.0		0.0	1.0
63	124.0	29.0	1336.0	0.0	-0.8755044	0.0	1.0
64	53.0	81.0	0.0	1341.0		1.0	0.0
65	127.0	40.0	1336.0	0.0	-0.6210239	0.0	1.0
66	41.0	92.0	0.0	1337.0		4.0	0.0
67	127.0	26.0	1336.0	0.0	-0.9273443	0.0	3.0
68	41.0	112.0	0.0	1338.0		0.0	0.0
69	100.0	40.0	1336.0	0.0	-0.7447725	0.0	0.0
70	46.0	113.0	0.0	1339.0		1.0	0.0
71	119.0	29.0	1336.0	0.0	-0.8442137	1.0	0.0
72	53.0	100.0	0.0	1338.0		1.0	1.0
73	150.0	37.0	1336.0	0.0	-0.7743603	1.0	2.0
74	57.0	109.0	0.0	1340.0		1.0	1.0
75	103.0	28.0	1336.0	0.0	-0.7323845	0.0	0.0
76	38.0	85.0	0.0	1339.0		1.0	0.0
77	113.0	37.0	1336.0	0.0	-0.735234	1.0	2.0

Left arm events (+,-): 4978.0-31.0 1041.0-38.0

Right arm events(+,-): 1340.0-44.0 3665.0-26.0

POLARIZATION (P,dP): -0.7580054 0.01333734 -75.8 ± 1.3

CORRECTED -82%

RESTART

Wed Sep 26 13:56:07 EDT 2001

POLARIZATION DILUTION due TO MOLECULAR H_2^+ IONS FROM THE ECR SOURCE

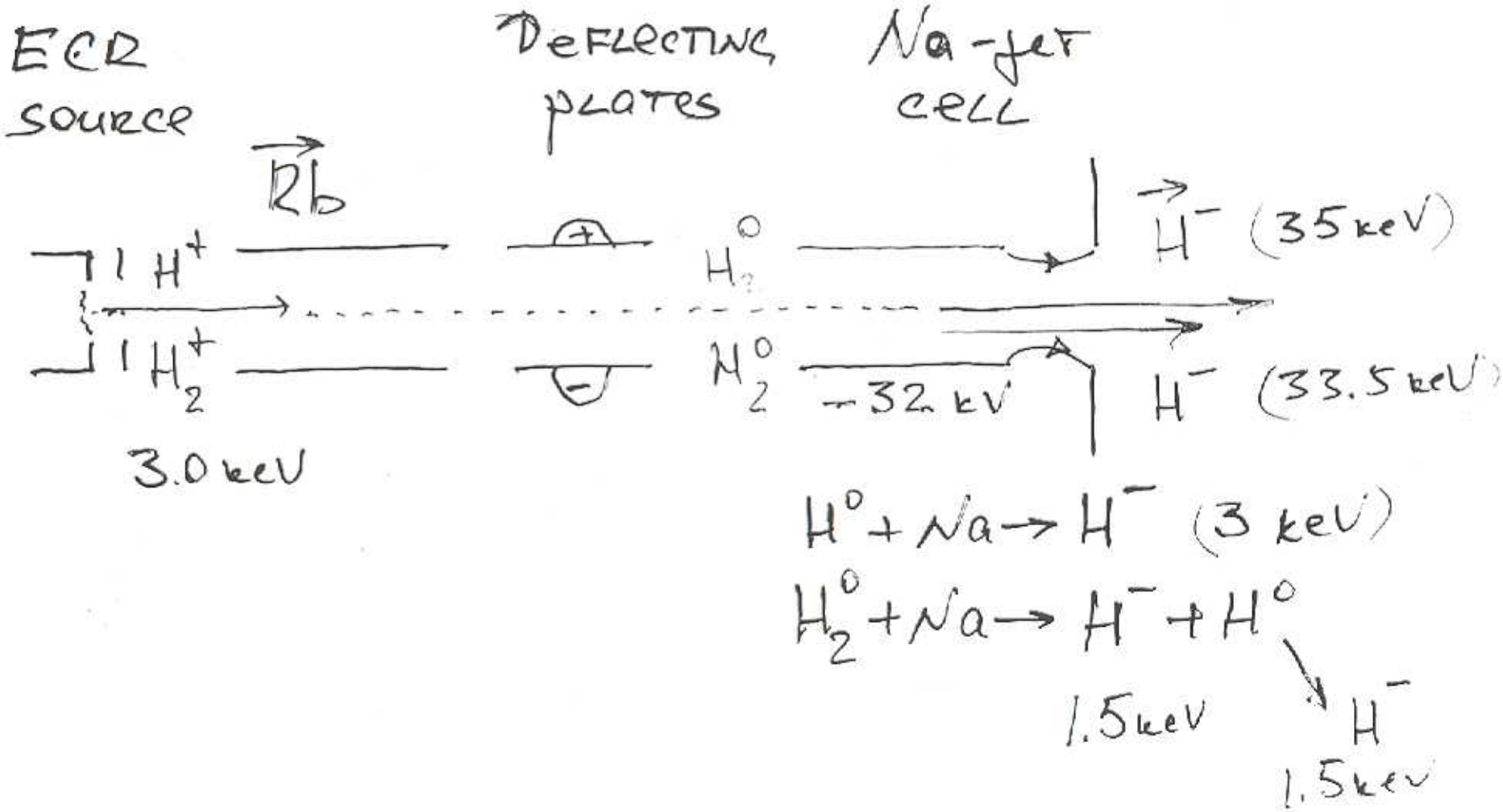

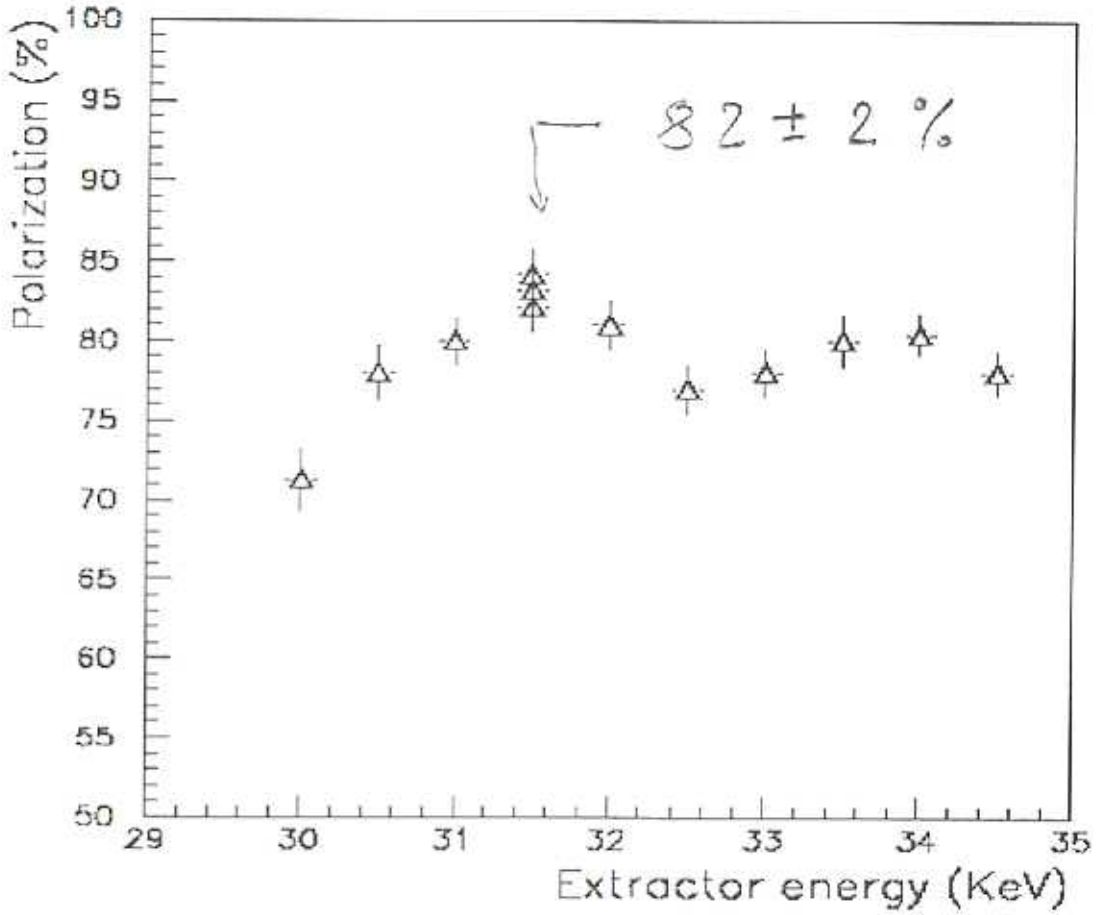

H- beam polarization at 200 MeV vs RFQ injection energy

$P_{RAW} \times 1.08$

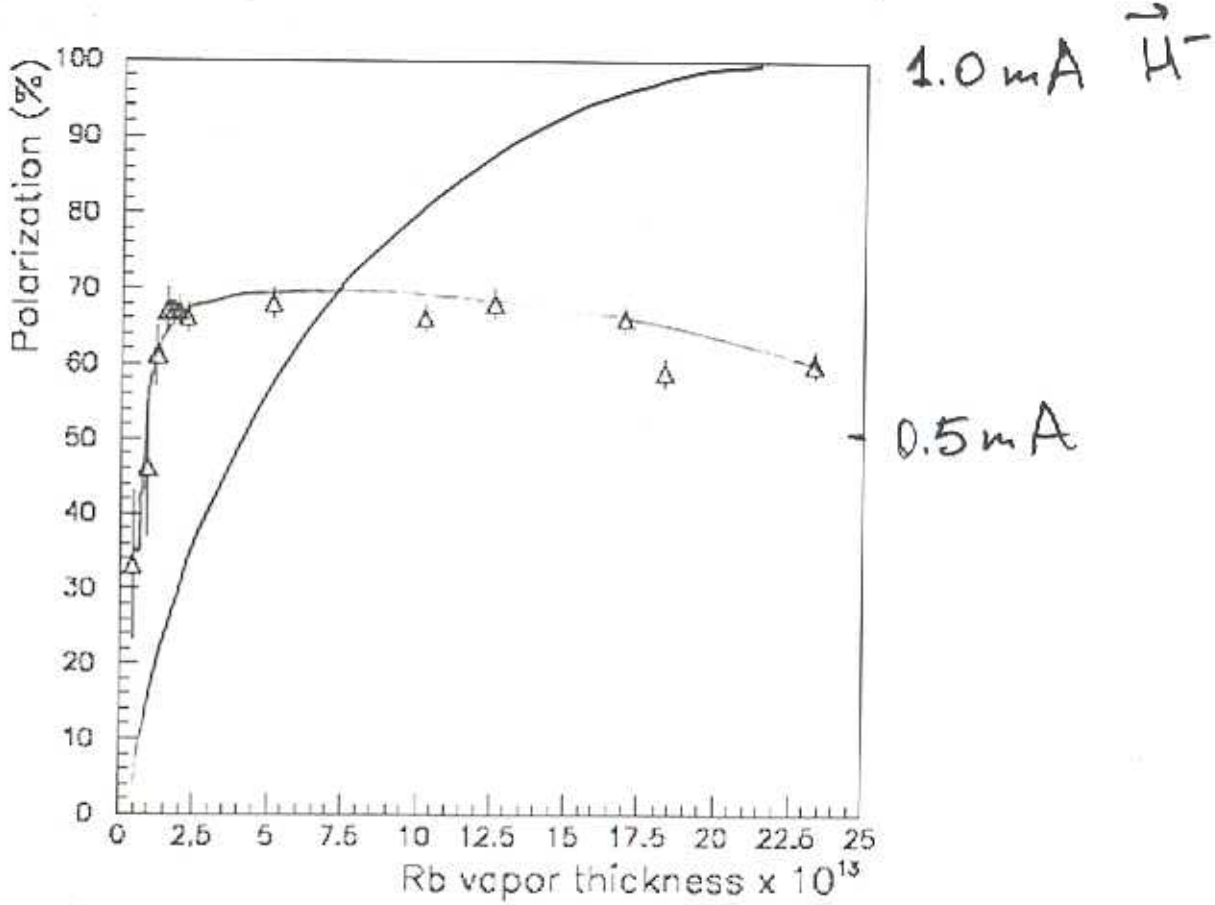

The proton beam polarization in Lamb-shift polarimeter vs the optically- pumped Rb vapor thickness

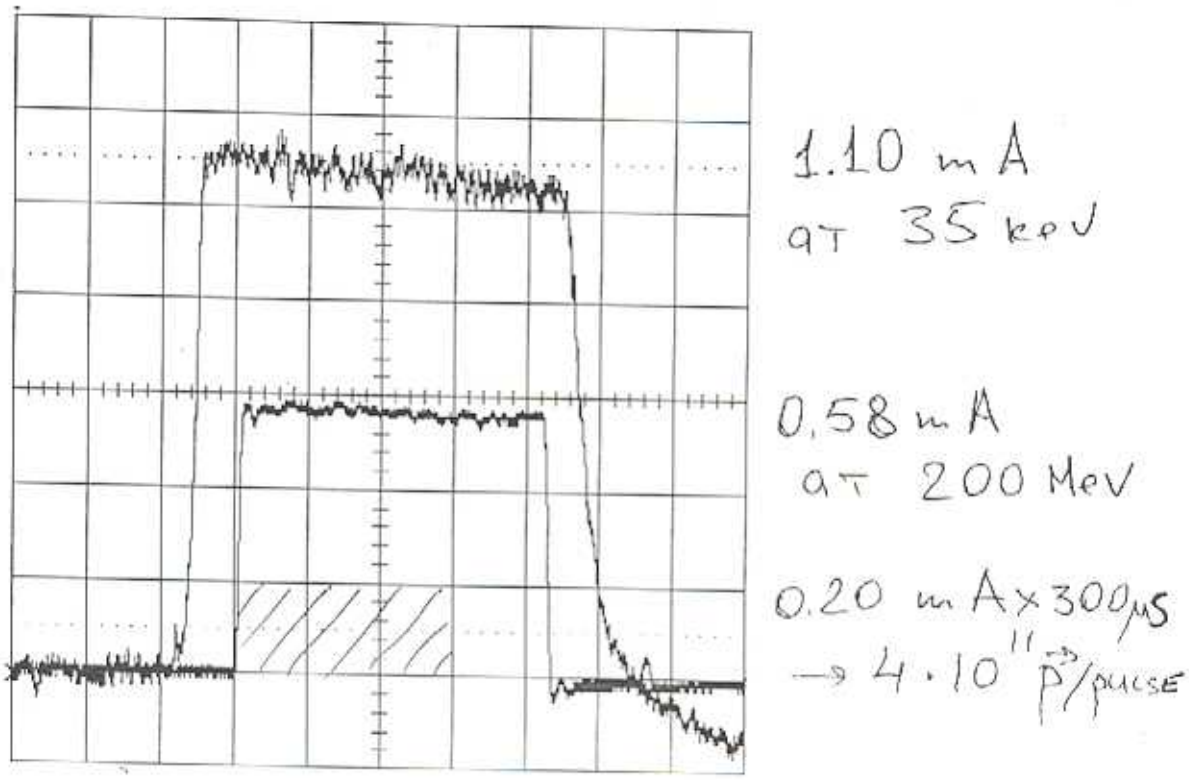

The polarized H – ion current pulse: top trace-the OPPIS beam at 35 keV energy; bottom trace – the 200 MeV beam current. A vertical scale is 0.2 mA/div, a horizontal scale is 100 us/div.

BROOKHAVEN NATIONAL LABORATORY

PROPOSAL INFORMATION QUESTONAIRE

LABORATORY DIRECTED RESEARCH AND DEVELOPMENT PROGRAM

PRINCIPAL INVESTIGATOR : A. ZELENSKI PHONE : 334-8387

DEPARTAMENT : CAD DATE :March 22, 2001

OTHER INVESTIGATORS: J.Alessi, M.Anerella, S.Kokhanovski, A.Kponou , V. LoDestro, H.Huang (BNL),
V.Klenov, V. Zoubets (INR, Moscow), V. Davydenko (BINP, Novosibirsk) - collaborators

TITLE OF PROPOSAL : FEASIBILITY STUDY OF A 20-50 mA POLARIZED H⁻ ION SOURCE FOR HIGH-ENERGY COLLIDERS

PROPOSAL TERM : OCTOBER 2001 TO : OCTOBER 2003

SUMMARY OF PROPOSAL

The objective of this LDRD project is a proof of principle of a very high intensity polarized H^- (D^-) ion sources, based on spin-transfer collisions between atomic hydrogen beam (of a 1.0 – 5.0 keV energy) and optically-pumped alkali –metal vapors. The advantage of this technique is that atomic beam intensity is not space-charge limited, therefore an atomic H beam intensity of about 500 mA equivalent current through the polarizing cells was already demonstrated. With a 10-16 % ionization efficiency in the sodium or rubidium ionizer cell a polarized H- ion current of about 20-50 mA can be achieved (some beam losses occur in the intermediate helium gaseous ionizer and optically pumped Rb cells). Favorable results in obtaining a high (in excess of 80%) nuclear polarization in the spin-transfer collisions would finally solve the problem of a polarized beam injectors for high-energy accelerators and colliders. The first application will be the polarized beam intensity increase for future polarized RHIC luminosity upgrade and also for eRHIC proposal .

PROPOSAL FOR 20-50 mA
POLARIZED H⁻ ION SOURCE