Helical Magnets

Workshop on RHIC Spin Physics

April 28, 1998

Erich Willen

Helical dipole magnets are being built at Brookhaven to control proton spin in RHIC. These magnets are designed to fit into the RHIC lattice at appropriate points and with minimal disruption to the existing hardware. A half-length model has been built and tested to validate the design. It produced a good quality, helical 4 T field with sufficient margin to be acceptable for machine use. Plans are under way for the production of the full complement of magnets, based on this design, over the next few years. A needed piece of equipment, an automated coil winding machine, is undergoing final checkout and debug. Production is expected to begin by Summer.

The attached drawings and tables show some of the technical features of the magnets.

Helical Magnets

EW
4/28/98

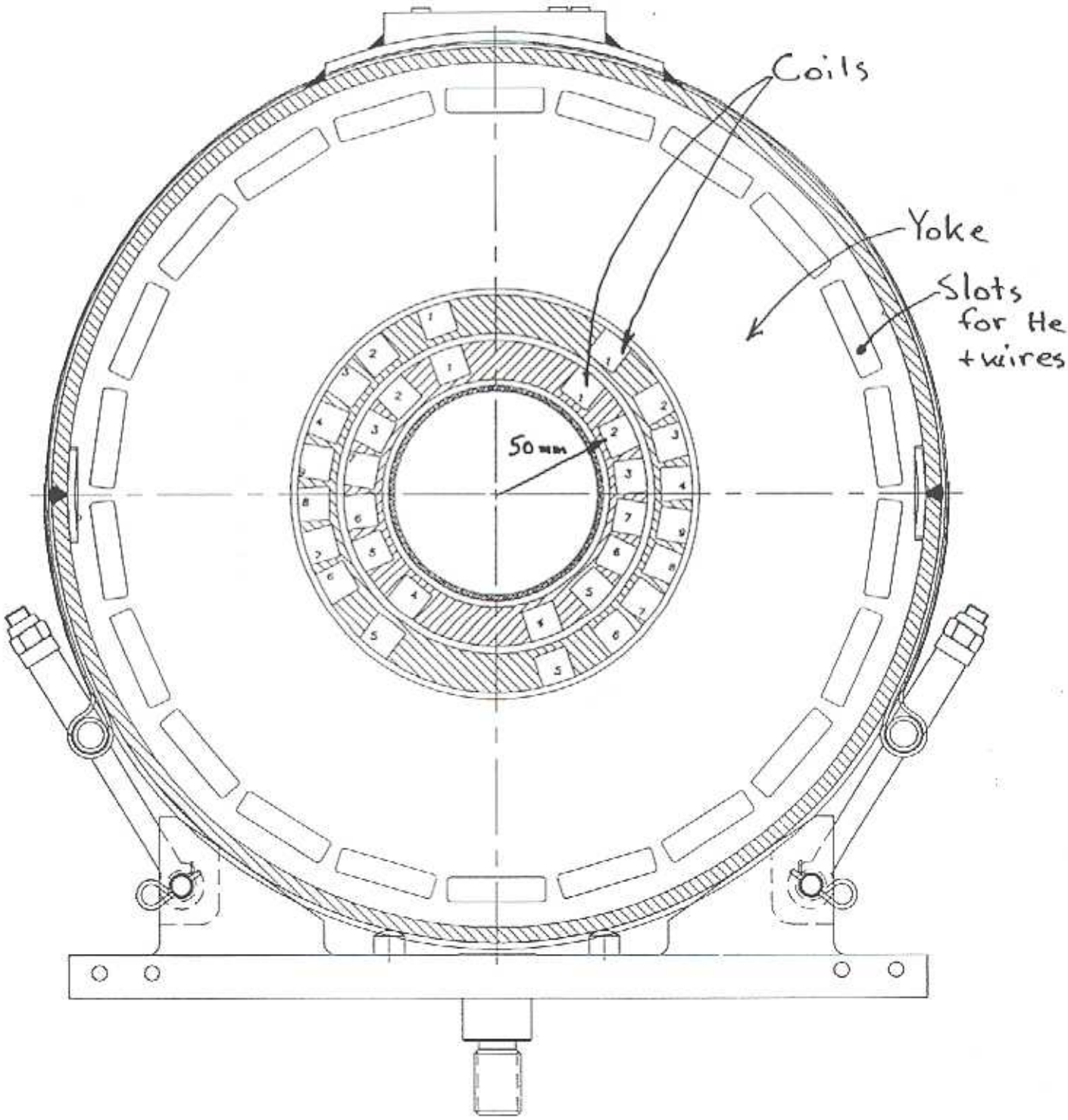

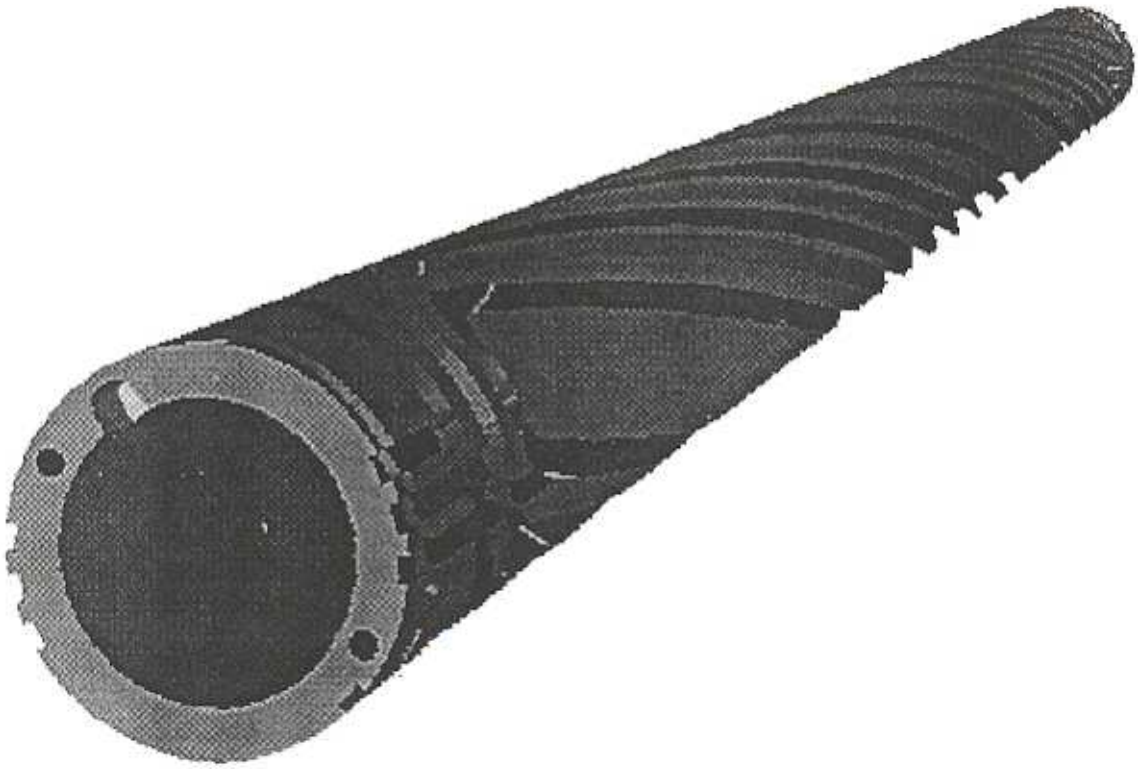

Selected mechanical parameters of the helical magnet.

Parameter	Value Inner, Outer
Number of cylinders	2
Num of current blocks per cylinder	7, 9
Num of cable turns per layer	12, 12
Num of layers per current block	9, 9
Num of cable turns per block	108, 108
Num of cable turns per cylinder	756, 972
Total turns	1728
Coil inner radius (mm)	49.7, 68.6
Coil outer radius (mm)	60.0, 78.9
Helix, magnetic length (mm)	2400
Helix, rotation (deg)	360
Yoke IR in straight section (mm)	84.5
Yoke IR in ends (mm)	114.4
Yoke outer radius (mm)	177.8

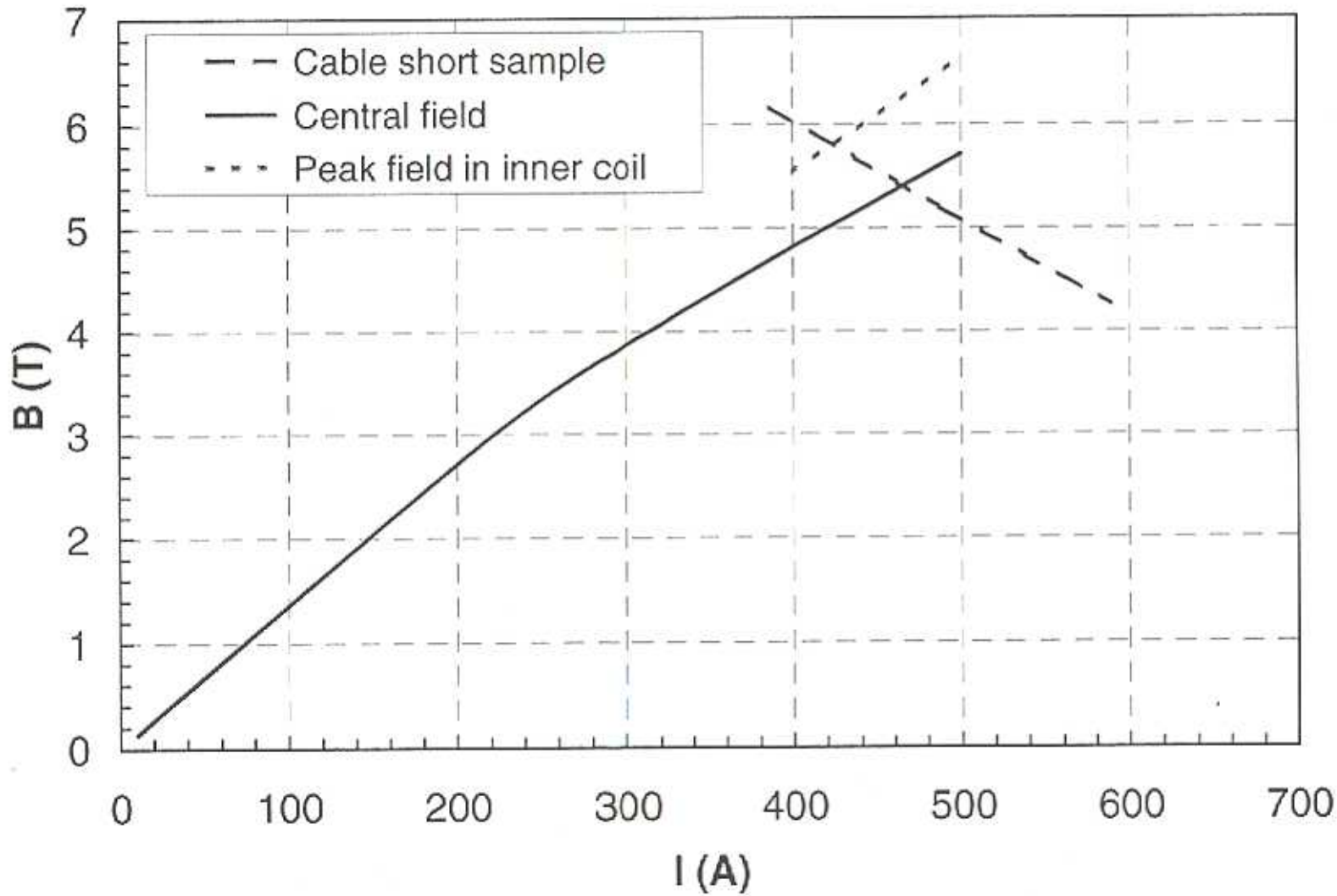
Cable short sample
Central field
Peak field in inner coil
B (T)
I (A)
0
1
2
3
4
5
6
7
0
100
200
300
400
500
600
700
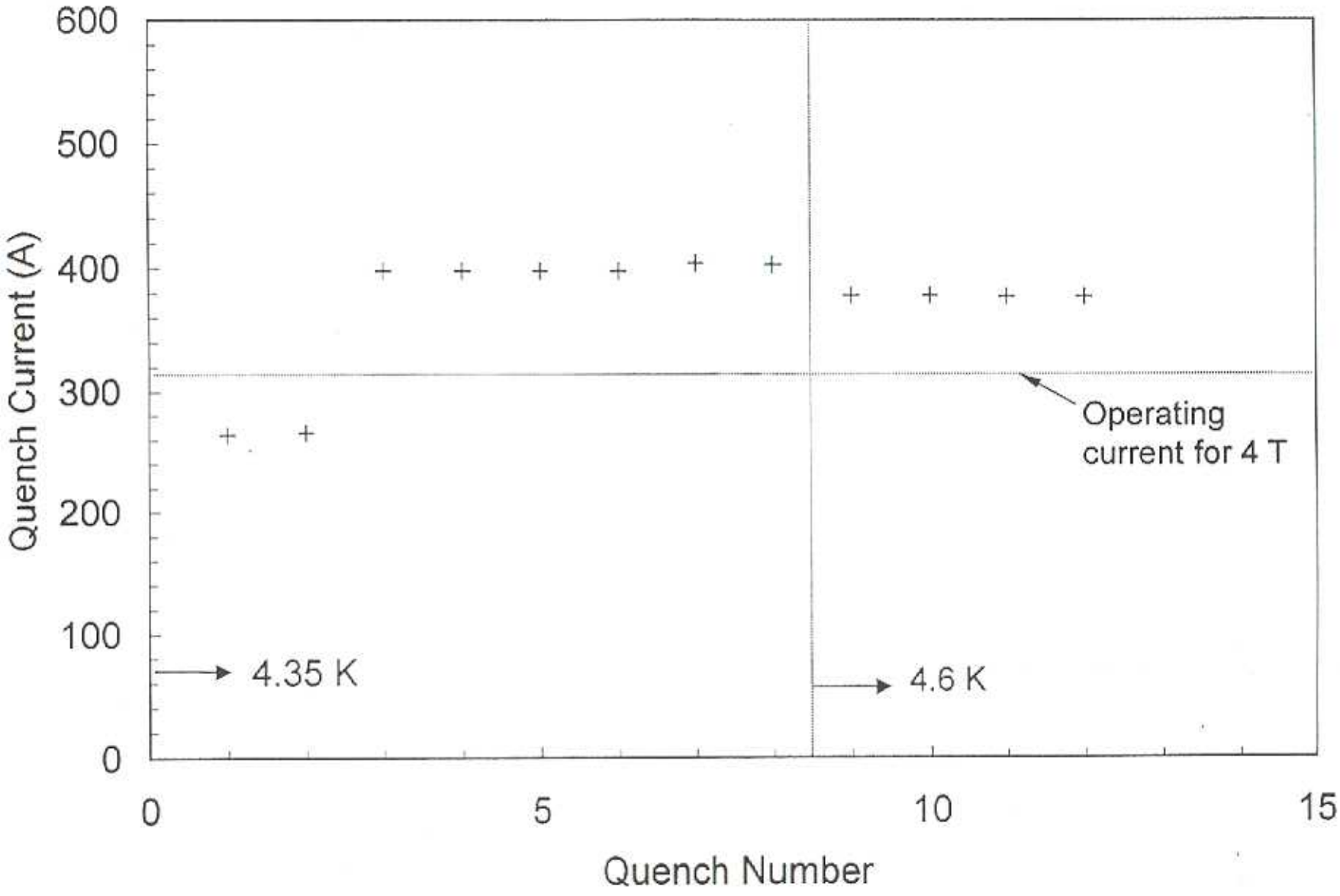
Measured quench performance of the helical magnet.