CNI Waveform Digitizer

S. Dhawan, Yale
October 22, 2002

for
RHIC Spin Collaboration Meeting XIII
RIKEN BNL Research Center

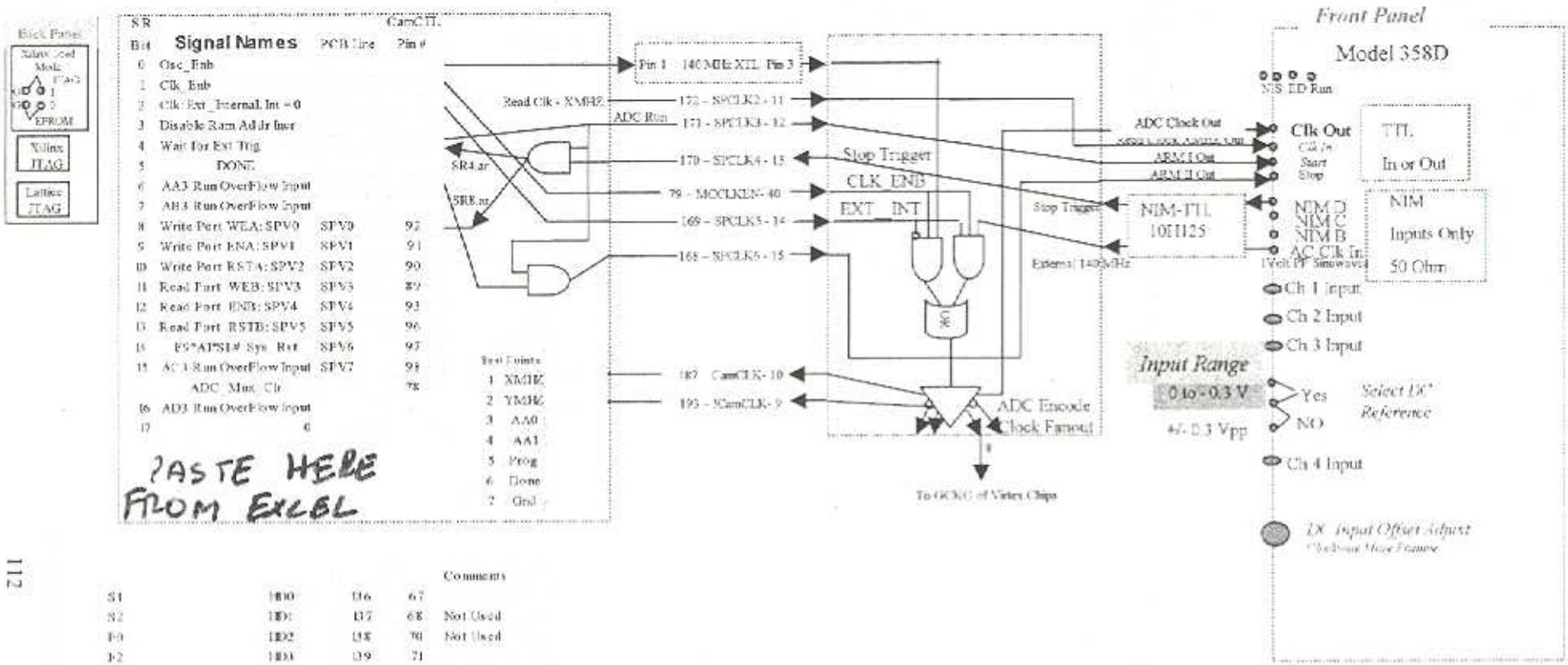

112

				Comments
S1	HD0	I36	67	
S2	HD1	I37	68	Not Used
F0	HD2	I38	70	Not Used
F2	HD3	I39	71	
F36	HD4	I40	72	
F37	HD5	I41	73	Not Used
BA1	HD6	I42	74	
BA2	HD7	I43	75	

8 - GCKO 92 Virtex

Load HD Register

S. DHAWAN

Yale University

Top Level Schematic

Model 358D PSI

26 Sep 2002 11:20 AM

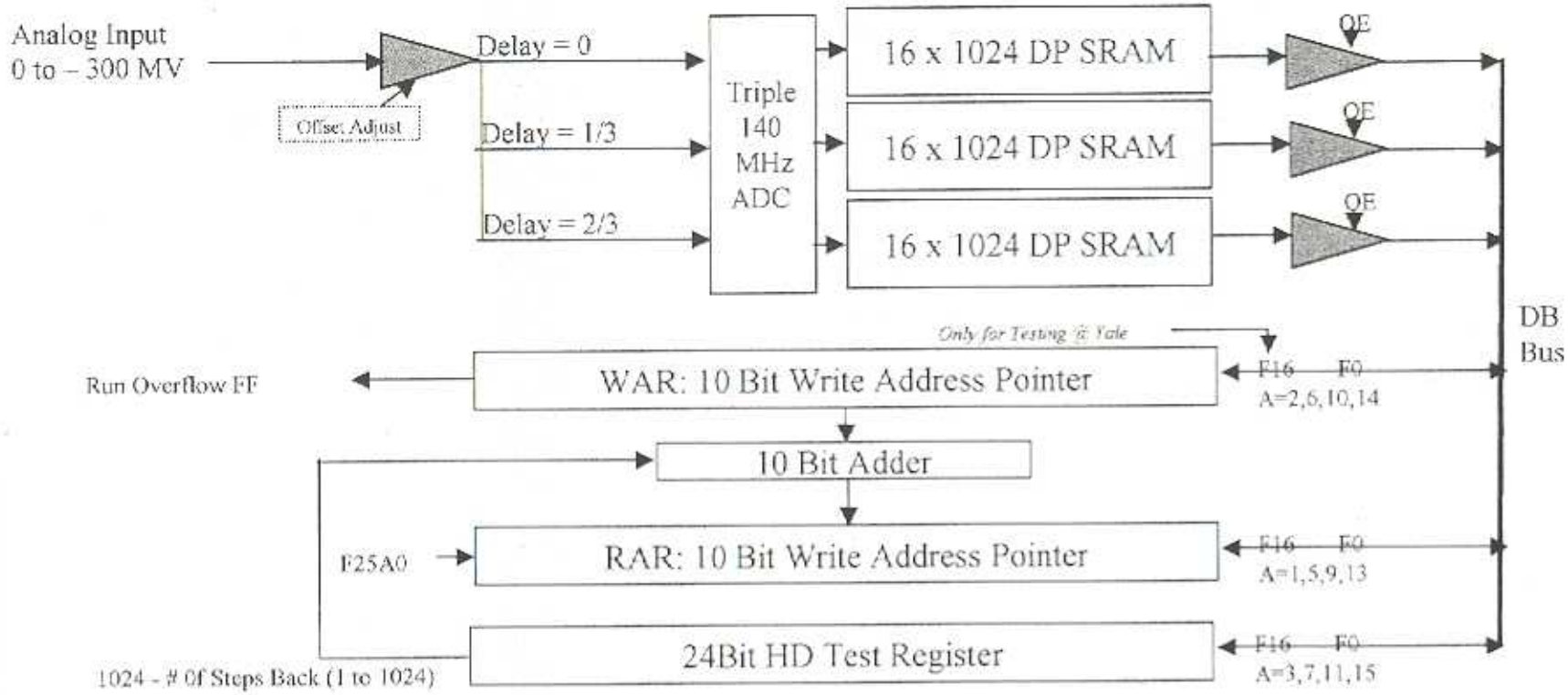

Xilinx Block

WFD Model 358D_PSI Yale University 19 Sept 2002 5 AM

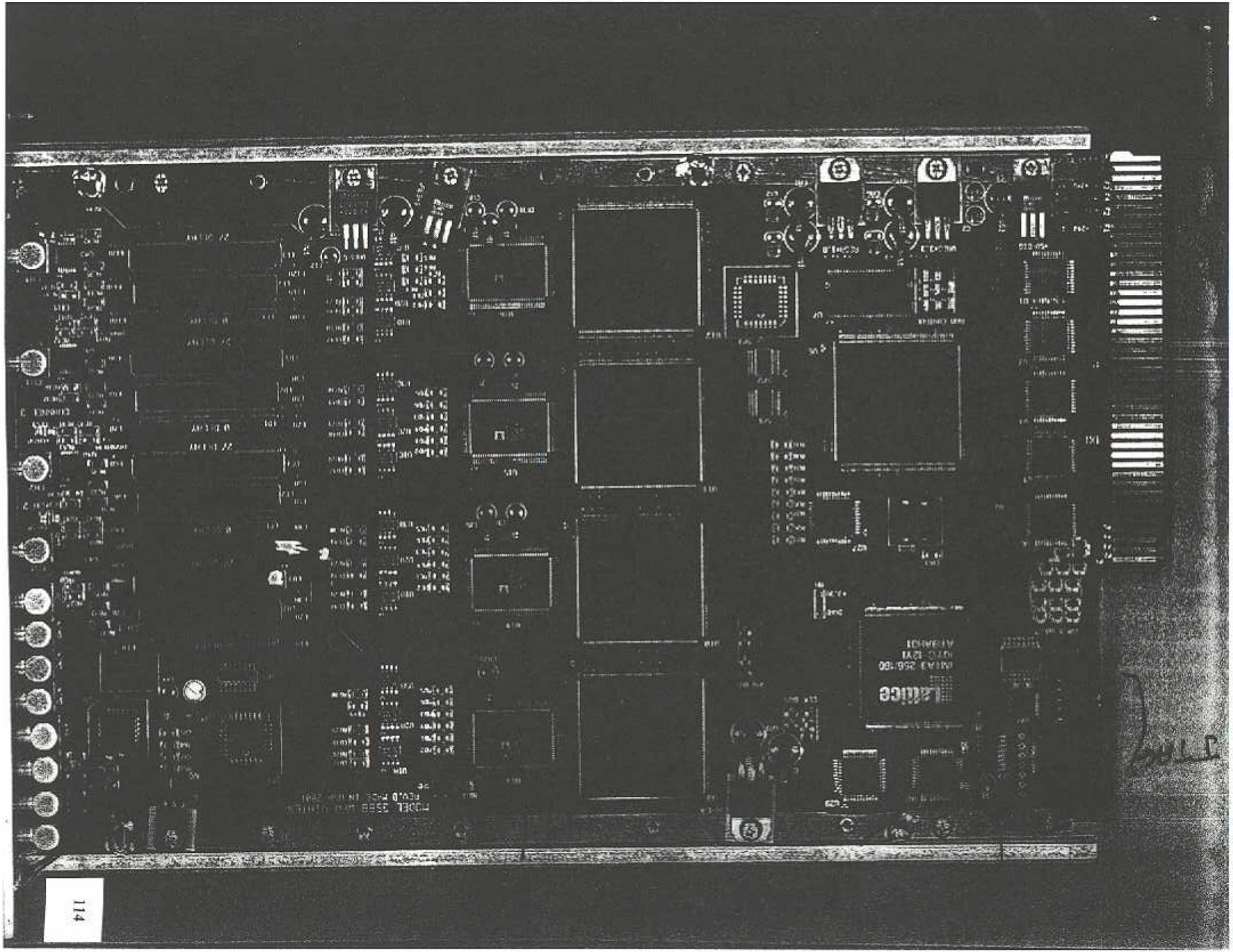
lattice

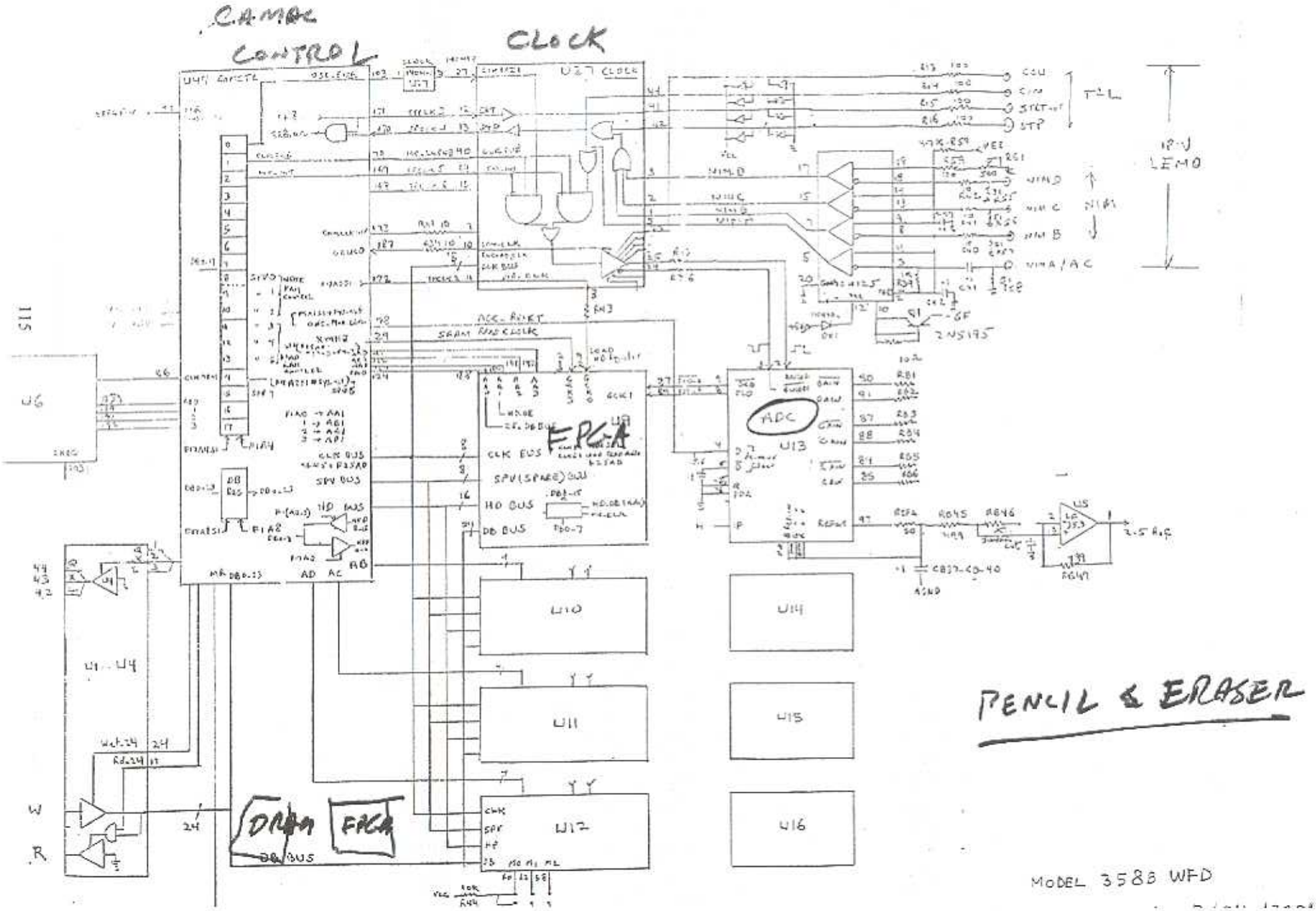
CAMAC CONTROL
CLOCK
U27 CLOCK
U47 CONTR
FPGA
ADC
U13
U10
U11
U12
U14
U15
U16
U1 - U4
U6
DRAM
FPGA
DB BUS
CLK BUS
SPV(SPARE) BUS
HD BUS
DB BUS
ADC RESET
SRAM
TTL
NIM
NIM A/AC
NIM B
NIM C
NIM D
2N5195
2.5 R.F.
PENCIL & ERASER
MODEL 3588 WFD

25-Sep-02 **Model 358D_ PSI** Data Format Yale University

10:00 AM

		Sampling Time						S2						S1							
		Byte						D2						D1							
Function Code																					
Write	Read	Subaddr																			
			17	16	15	14	13	12	11	10	9	8	7	6	5	4	3	2	1	0	
F16	F0	4*(Ch#- -1)+1																			Memory Read Address
F16	F0	4*(Ch#- -1)+2																			Memory Write Address
F16	F0	4*(Ch#- -1)+3																			24 Bit HD Test Register
	F2	4*(Ch#- -1)+1																			Blue Delay = 0
	F2	4*(Ch#- -1)+2																			Green Delay = 1/3 Cycle
	F2	4*(Ch#- -1)+3																			Red Delay = 2/3 Cycle
		18 Bit Status Register	17	16	15	14	13	12	11	10	9	8	7	6	5	4	3	2	1	0	
					7	6	5	4	3	2	1	0								osc_enb	
			0	Run OVF Ch# D	Run OVF Ch# C				WEA			WEA	Run OVF Ch# B	Run OVF Ch# A	Done				clk_enb		
F17	F1	A4						ENA		ENA							clk_ext				
		A4					RSTA			RSTA							Disable Ram addr Incr.				
										Write DP RAM						Wait for Ext Trig					
							Read DP RAM														
								1			1	1							1	1	
			131072	65536	32768	16384	8192	4096	2048	1024	512	256	128	64	32	16	8	4	2	1	Weight
			0	0	0	0	0	4096	0	0	512	256	0	0	0	0	0	0	2	1	4367

CAMAC Commands

F	A	S	Command	Pin # U47	Pin # Vmex	Name of Signal	Function	# of Bits	
			Read db0-db23			*Data OE*	*Read 24 bits*	24	
			Write db0-db23			*Wr_Enb*	*Write 24 bits*	24	
2	1		Read dout0-dout15	161	100	AA0	Read ADC Blue 16 bits (AA0) Channel A inv Adr	16	CLK5, CLK6 is Mux Select
2	2		Read dout0-dout15	124	188		Read ADC Green 16 bits (AA0) Channel A	16	Pass Datavay A1 & A2
2	3		Read dout0-dout15	161	100		Read ADC Red 16 bits (AA0) Channel A	16	
2	5		Read dout0-dout15	120	186	AB0	Read ADC Blue 16 bits (AB0) Channel B inv Adr	16	
2	6		Read dout0-dout15	161	100		Read ADC Green 16 bits (AB0) Channel B	16	
2	7		Read dout0-dout15	114	156		Read ADC Red 16 bits (AB0) Channel B	16	
2	8		Read dout0-dout15	161	100	AC0	Read ADC Blue 16 bits (AC0) Channel C inv Adr	16	
2	10		Read dout0-dout15	107	160		Read ADC Green 16 bits (AC0) Channel C	16	
2	11		Read dout0-dout15				Read ADC Red 16 bits (AC0) Channel C	16	
2	13		Read dout0-dout15			ADC	Read ADC Blue 16 bits (AD0) Channel D inv Adr	16	
2	14		Read dout0-dout15				Read ADC Green 16 bits (AD0) Channel D	16	
2	15		Read dout0-dout15				Read ADC Red 16 bits (AD0) Channel D	16	
0	1		Read dout0-dout10				Read Memory RAR 10 bits Channel A	10	
0	2		Read dout0-dout10				Read Memory WAR 10 bits Channel A	10	
0	3		*Read db0-db23*				Read HD Test Register/Counter 24 bits Channel A	24	
0	5		Read dout0-dout10				Read Memory RAR 10 bits Channel B	12	
0	6		Read dout0-dout10				Read Memory WAR 10 bits Channel B	10	
0	7		*Read db0-db23*				Read HD Test Register/Counter 24 bits Channel B	24	
0	9		Read dout0-dout10				Read Memory RAR 10 bits Channel C	10	
0	10		Read dout0-dout10				Read Memory WAR 10 bits Channel C	10	
0	11		*Read db0-db23*				Read HD Test Register/Counter 24 bits Channel C	24	
0	13		Read dout0-dout10				Read Memory RAR 10 bits Channel D	10	
0	14		Read dout0-dout10				Read Memory WAR 10 bits Channel D	10	
0	15		*Read db0-db23*				Read HD Test Register/Counter 24 bits Channel D	24	
16	1		Write dout0-dout10			AA1	Write Memory RAR 10 bits Channel A	10	
16	2		Write dout0-dout10				Write Memory WAR 10 bits Channel A	10	
16	3		*Write db0-db23*				Write HD Test Register/Counter 24 bits Channel A	24	
16	5		Write dout0-dout10				Write Memory RAR 10 bits Channel B	10	
16	6		Write dout0-dout10				Write Memory WAR 10 bits Channel B	10	
16	7		*Write db0-db23*				Write HD Test Register/Counter 24 bits Channel B	24	
16	9		Write dout0-dout10				Write Memory RAR 10 bits Channel C	10	
16	10		Write dout0-dout10				Write Memory WAR 10 bits Channel C	10	
16	11		*Write db0-db23*				Write HD Test Register/Counter 24 bits Channel C	24	
16	13		Write dout0-dout10				Write Memory RAR 10 bits Channel D	10	
16	14		Write dout0-dout10				Write Memory WAR 10 bits Channel D	10	
16	15		Write db0-db23				Write HD Test Register/Counter 24 bits Channel D	24	
1	8		Read db0-db23				Read db Test Register	24	
17	8	1	Write db0-db23				Write db Address Register	24	
1	4						Read Status Register	8	
17	4	1					Write Status Register	8	
						sr0	nw_Enb	1	
						sr1	dh_enb	1	
						sr2	db_ea_int, ea=0, ea=1	0	
						sr3	Disable Rem addr inc		
						sr4	Wait for Ed Trig		
						sr5	Recording Time OverFlow Channel D		AB3 Read Only
						sr6	Recording Time OverFlow Channel C		AC3 Read Only
						sr7	Recording Time OverFlow Channel D		AD3 Read Only
				92	138	sr8	sdv0 Cleared by Lemo_STP	1	WEA Write DP RAM
				91	139	sr9	sdv1	1	ENA Write DP RAM
				90	140	sr10	sdv2	0	WCLK Write DP RAM
				89	141	sr11	sdv3	0	WEA Read DP RAM
				93	154	sr12	sdv4	1	ENA Read DP RAM
				96	165	sr13	sdv5	0	RCLK Read DP RAM
				97	166	sr14	sdv6		
				98	167	sr15	Recording Time Over Flow Channel A		AA3 Read Only
						sr16			
						sr17			
						sr18			
25	0	2		193	212	XMHZ	Add to Read Clk XMHZ		
25	0			160	101	clk6	Load Read Address from Write Address		
9	1	1	+sys_rst	103	adc_pin4		demux_or of all ADCs		
9	2	1	+sys_rst	97	186	spv6	Clear Write Test counters & Read Pointers		
9	0	1		99	0		sys_rst		
Z		2							
C		1							
8	0						Test LAM Q=1 if Request present		
10	0						Clear LAM Source FF		
24	0	1					Clear EC FF to disable LAM Mask		
26	0	1					Set EC FF to enable LAM Mask		
27	0						Test LAM Source Q=1 if LAM Source=1		

10/212002 Parts List N358B

2:00 PM

#	Qty/ PCB	Description	Manf.	Part #	Order #	Unit Price	Cost Per Board	Qty For 21 Boards	Inventory	Needed	Order qty	Extended Price
1	5	FPGA	Xilinx	XCV200E- 6 PQ240C	INS 072301	$ 76.55	$ 382.75	105	0	105	110	$ 8,420.50
2	2	jtagPROM	Xilinx	XC18V04VQ44C	INS 072301	$ 26.60	$ 53	42	10	32	36	$ 957.60
3	4	ADC	ADI	AD9483KS-140	FAI 092702	$ 27.00	$ 108	84	11	73	80	$ 2,160.00
4	12	Diff Amp	ADI	AD8131AR	FAI 092702	$ 2.69	$ 32	252	30	222	250	$ 672.50
5	4	Driver Amp	TI	THS6022CPWP	INS 072301	$ 3.31	$ 13	84	16	68	60	$ 198.60
6	1	DRAM	Micron	MT48LC16M16A2TG-75	AV 072301	$ 7.15	$ 7	21	0	21	25	$ 178.75
7	1	CamCTL	Lattice	M4A3-256/160-10Y	AV 072301	$ 20.90	$ 21	21	6	15	24	$ 501.60
8	5	Dataway Drv	Lattice	M4A5-64/32-10VC	AV 072301	$ 3.65	$ 18	105	45	60	100	$ 225.00
9	1	Clock Driver	Lattice	M4A3-32/32-5VC	AV 072301	$ 2.25	$ 2	21	2	19	25	$ 56.25
10	1	Oscillator 140 MHz	Fox	JITO-2-PC3AE-140	Quick Order	$ 4.54	$ 5	21	12	9	25	$ 113.50
11	1	MM74H423AM	Fairchild/Phil	PHISN74HC123D	FAI	$ 0.19	$ 0	21	100	79	0	$ -
12	1	74 LCX 244T	ST/Fairchild	FSCSN74 LCX 244	FAI052201	$ 0.22	$ 0	21	100	79	0	$ -
13	1	MECL-TTL	Motorola	MC10H125FN	FAI 092702	$ 2.49	$ 2	21	9	12	20	$ 49.80
14	2	Fuse 3Amps		LF251003	FAI 051401	$ 0.18	$ 0	42	60	18	0	$ -
15	2	1.8 V Regulator 1.5A	ST	LD1086V18		$ 2.00	$ 4	42	135	93	0	$ -
16	1	3.3 V Regulator 1.5A	ST	LD1086V33		$ 2.00	$ 0	21	20	1	25	$ 5.75
17	2	5 V Regulator 3.0A	Micrel	MIC29300-5.0BT	FAI 092702	$ 2.49	$ 5	42	40	2	50	$ 124.50
18	1	-5 V Regulator 1.0A	NSC	LM2990T-5.0		$ 2.00	$ 2	21	32	11	0	$ -
19	1	2N5195 PNP		2N5195	FAI 051401	$ 0.40	$ 0	21	100	79	0	$ 40.00
20	12	LEMO Right Angle	LemoUSA			$ 6.00	$ 72	252	46	206	300	
21	1	JTAG Lattice Connector			Digikey MHD10K	$ 1.00	$ 1	21	8	13	15	
22	1	JTAG Xilinx Connector			Newark	$ 1.00	$ 1	21	46	25		
23	1	Offset Connector				$ 0.50	$ 1	21	6	15	20	
24	6	LED			FAI 051401	$ 0.13	$ 1	126	54	72	100	$ 12.50
25	1	PC Board				$100.00	$ 100	21	0	21	0	$ -
26	1	Assembly				$200.00	$ 200	21		21	4	$ 800.00
27	1	Front Panel				$ 30.00	$ 30	21	0	21	5	$ 150.00
28	2	Rails	Techni Fab	P3208		$ 4.25	$ 9	42		42	50	$ 212.50
29	2	Ferrite SMT 1806 6A 60 Ohms		HI 1806T600R	DK072301	$ 0.26	$ 0.510	42	200	158	250	$ 63.75
30	8	Diodes Case LL34	592-RLS4154 or RLS92		MS072301	$ 0.046	$ 0.368	168	50	118		
31	220	1 uF 1206	Xicom		Mouser: 140-CC602Z104M	$ 0.026	$ 5.720	4620	0	4620		
32	20	15uF 10V				$ 0.22	$ 4.400	420				
33	1	10Turn 50K Pot 3006P	Bourns	3006P-503-ND	DK072301	$ 1.58	$ 1.575	21	0		10	
34	1	1Turn 500 Pot 3329P	Bourns			$ 1.00	$ 1.000	21				
35	1	TPStrip - 7 Female	Berg			$ 0.40	$ 0.400	21				
36	1	Misc SMD Components				$ 25.00	$ 25.000	21				
						Total =	$1,110.153					$ 14,943

21-Oct-02
1:30 PM

Model 358D WFD

Price Quotes

Quantity = 25

PC Boards

	Tooling	Test	Total Tooling	25Piece Price	Total $
Advanced Circuits	$474	$389.56	$863.56	$106.54	$3,527.06
Electro Pac Inc.	$595.00	$1,827.09	$2,422.09	$72.00	$4,222.09
Pronto Circuits	$480.00	$800.00	$1,280.00	$72.00	$3,080.00

Assembly

Argos Trans Data			$1,147.00	$161.49	$5,184.25
Interplex Technologies Corp.					