POLARIZED SOURCE

PERFORMANCE IN 2001-02 RUN

AND FUTURE PLANS

ANATOLI ZELENSKI

April 12, 2002

1. OPPIS INJECTOR
2. SOURCE OPERATION
3. 200 MeV POLARIMETER
4. POLARIZATION MEASUREMENTS DURING THE RUN
5. POLARIZATION DIAGNOSTICS UPGRATE
6. PLANS

The polarized RHIC injector layout

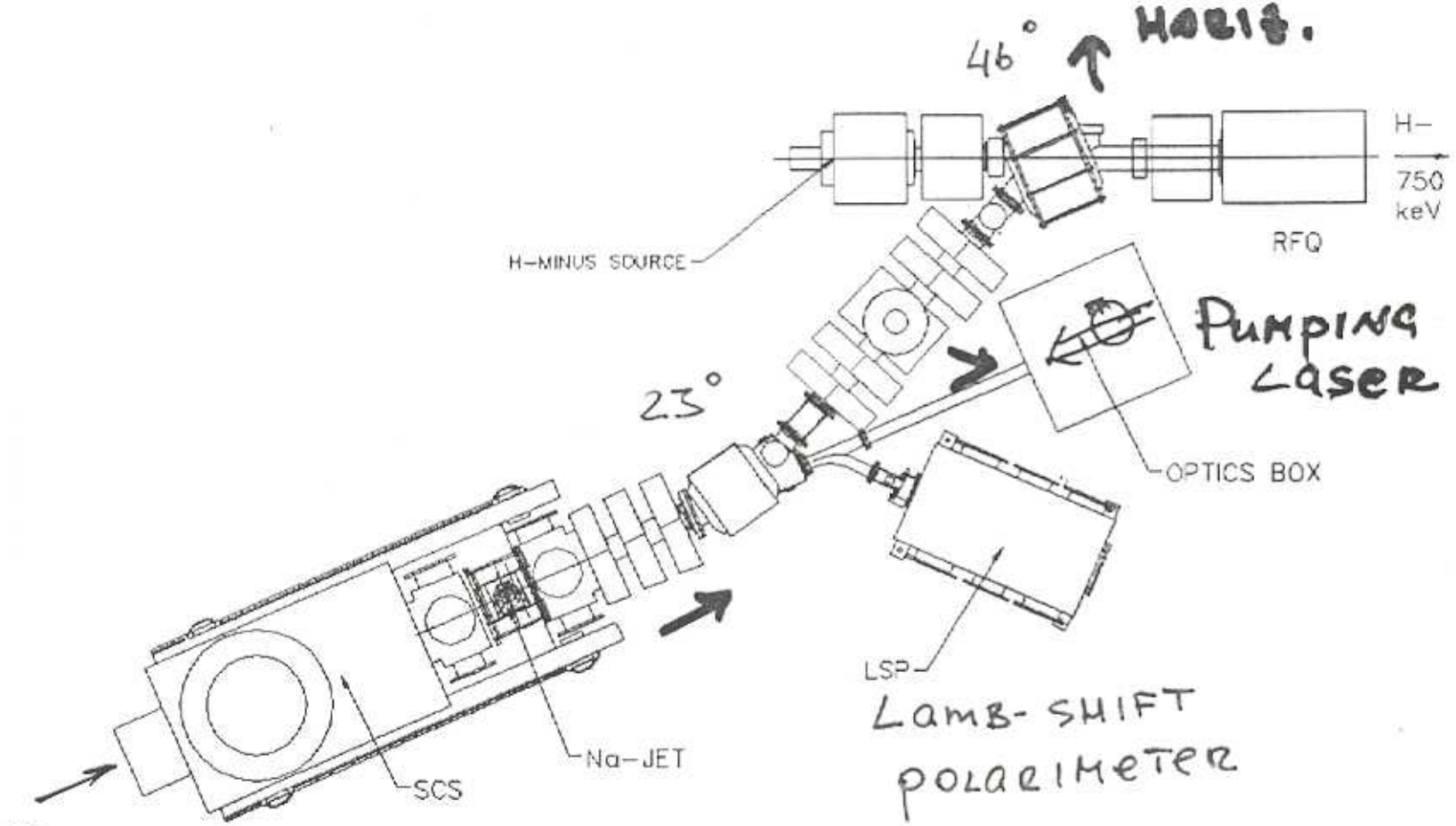

Spin Rotator

Horiz.

Vert

Pumping Laser

Lamb-shift polarimeter

Probe Laser

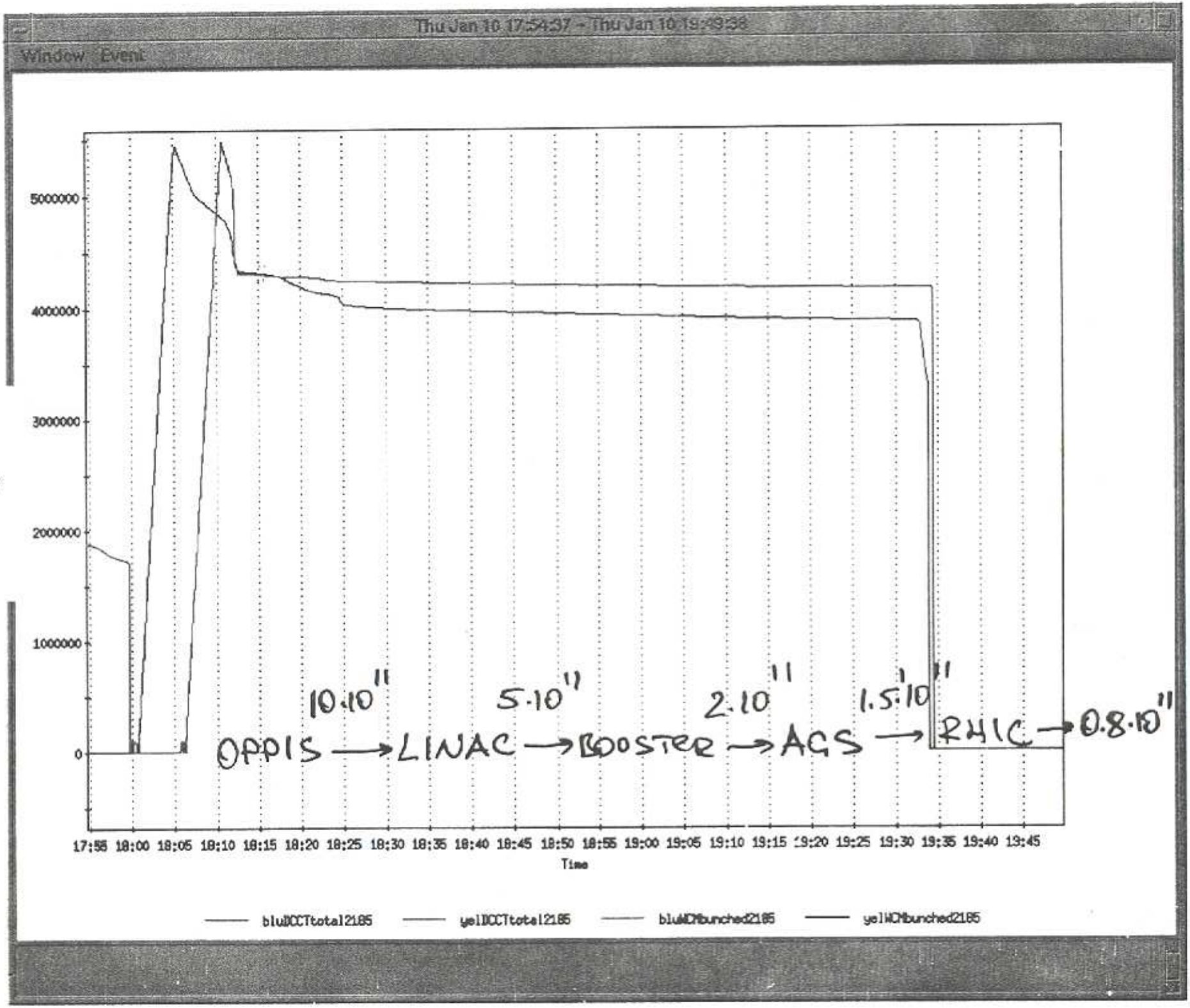
Thu Jan 10 17:54:37 - Thu Jan 10 19:29:36
Window Event
5000000
4000000
3000000
2000000
1000000
0
10·10^11
5·10^11
2·10^11
1.5·10^11
OPPIS → LINAC → BOOSTER → AGS → RHIC → 0.8·10^11
17:55 18:00 18:05 18:10 18:15 18:20 18:25 18:30 18:35 18:40 18:45 18:50 18:55 19:00 19:05 19:10 19:15 19:20 19:25 19:30 19:35 19:40 19:45
Time
blu BCCTtotal2185
yel BCCTtotal2185
blu WCMbunched2185
yel WCMbunched2185

$\theta^\circ = 157.1^\circ$ AB = 327 L2-440 TKG-240

ECR- 59mA (U_3-139)

Boost. inj 5800

AGS exp 2000 (1955)

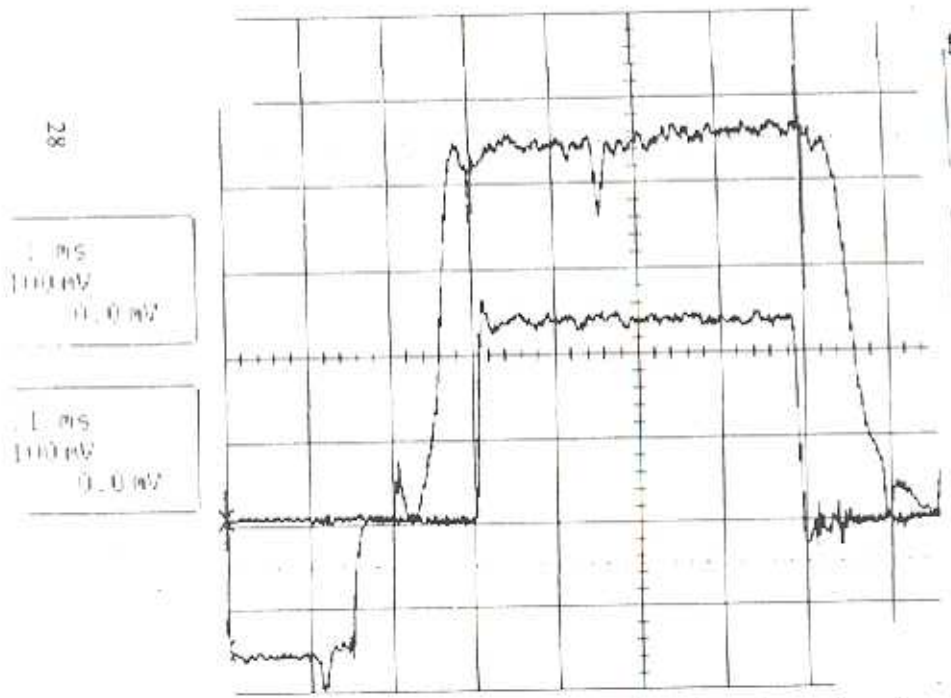

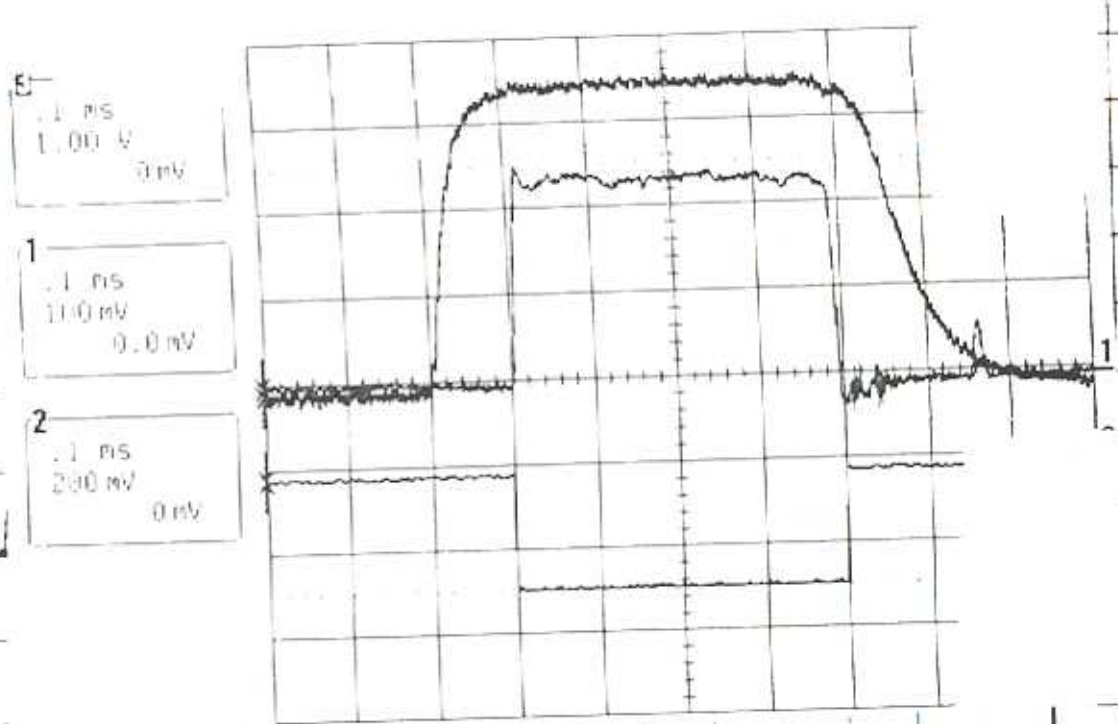

Laser trigger adjustment

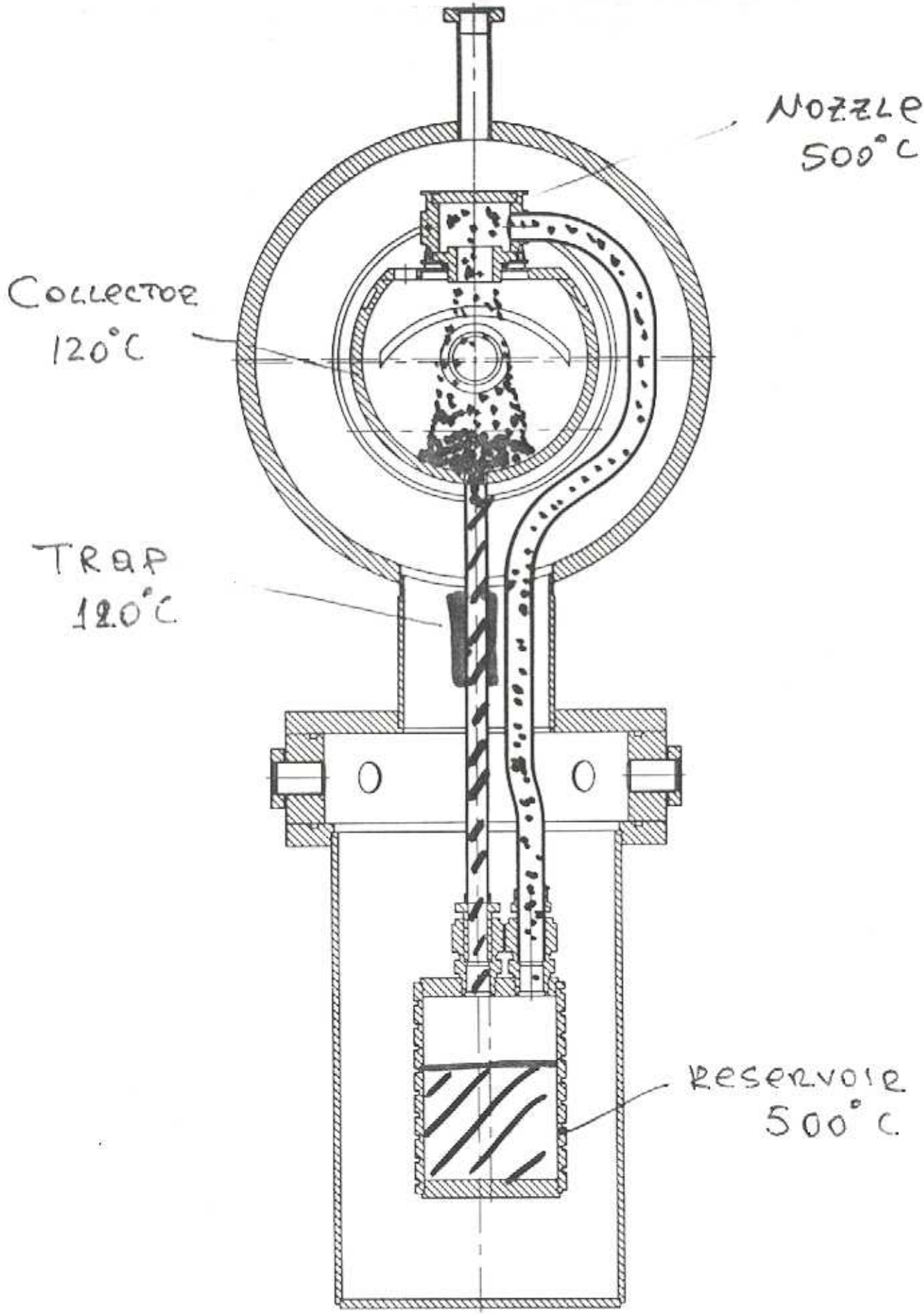

SECTION B–B

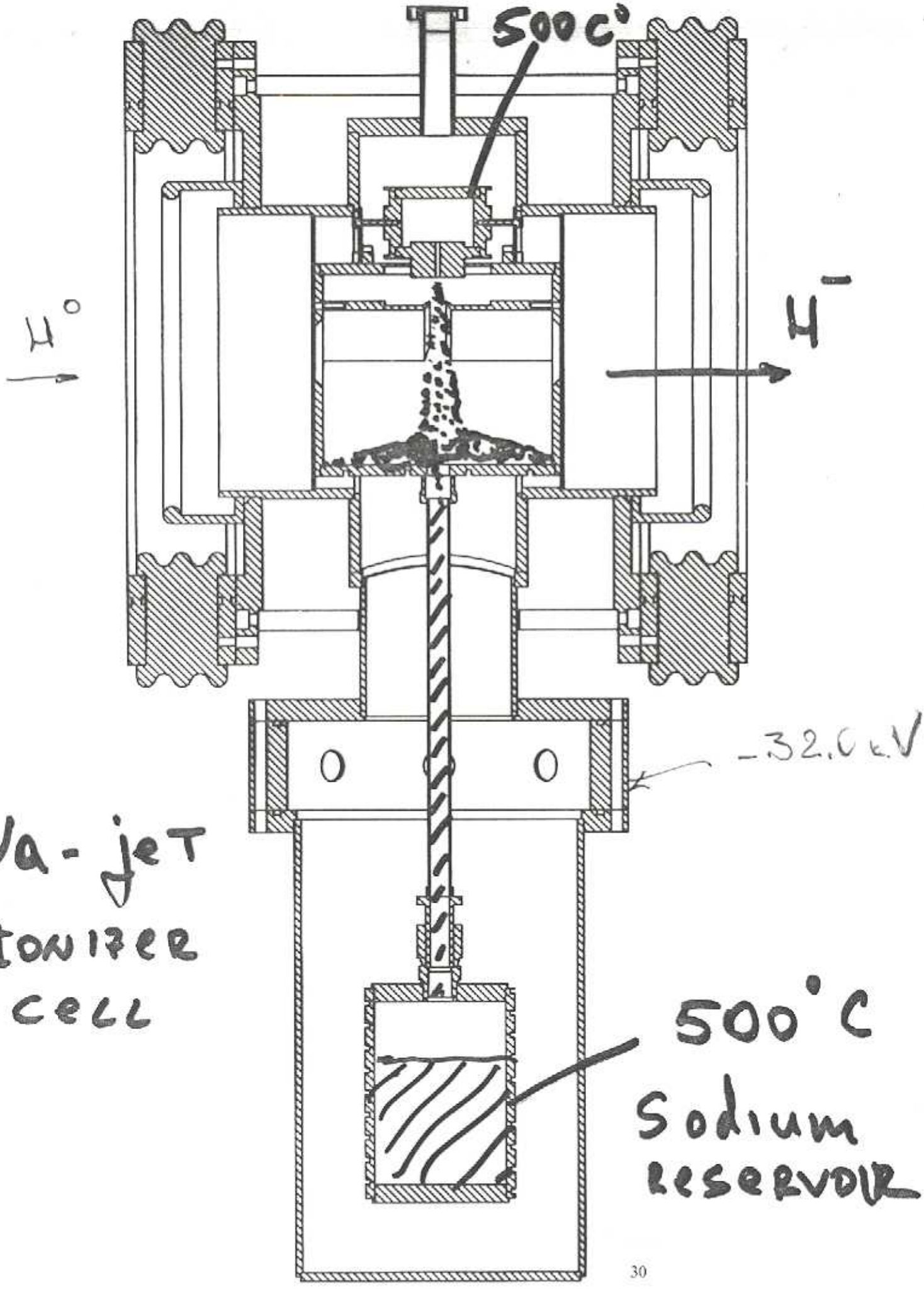
500 C°
H°
H⁻
-32.0 kV
Na-jet
Ionizer
cell
500°C
Sodium
reservoir

Rb POLARIZATION MEASUREMENT BY FARADEY ROTATION TECHNIQUE

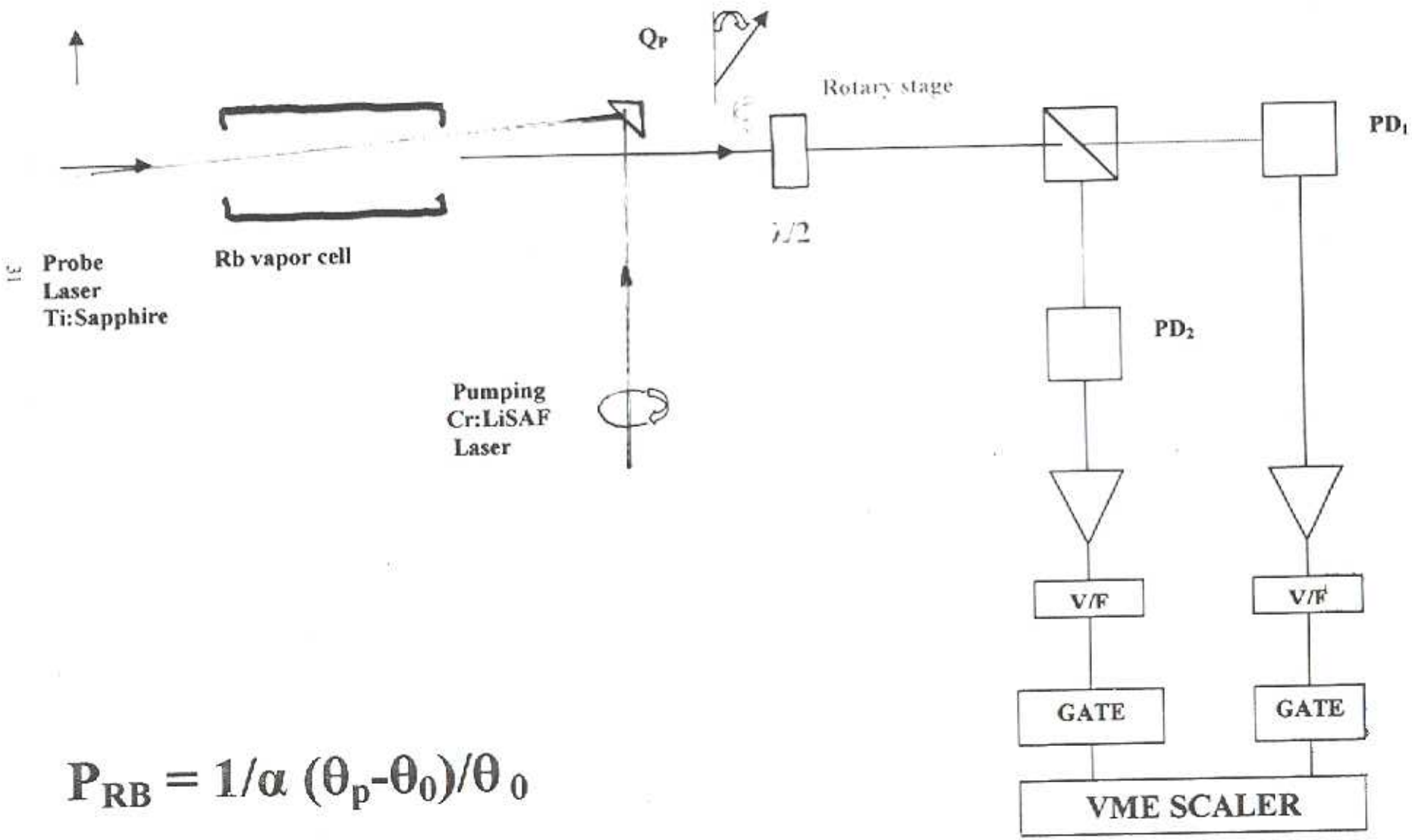

$$P_{RB} = 1/\alpha\ (\theta_p - \theta_0)/\theta_0$$

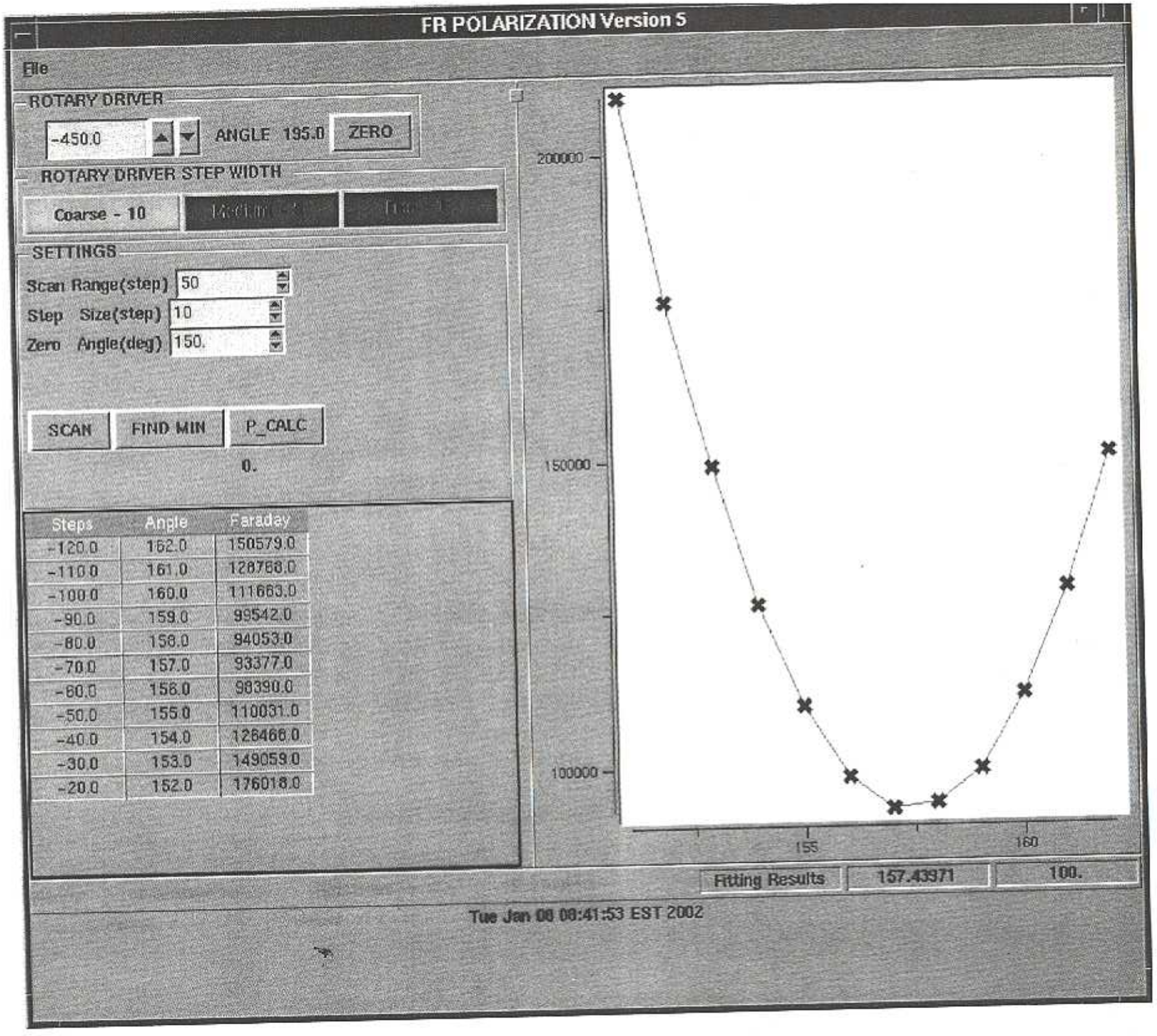
FR POLARIZATION Version 5
File
ROTARY DRIVER
-450.0
ANGLE 195.0
ZERO
ROTARY DRIVER STEP WIDTH
Coarse - 10
SETTINGS
Scan Range(step) 50
Step Size(step) 10
Zero Angle(deg) 150.
SCAN
FIND MIN
P_CALC
0.
Steps Angle Faraday
-120.0 162.0 150579.0
-110.0 161.0 128768.0
-100.0 160.0 111663.0
-90.0 159.0 99542.0
-80.0 158.0 94053.0
-70.0 157.0 93377.0
-60.0 156.0 98390.0
-50.0 155.0 110031.0
-40.0 154.0 126466.0
-30.0 153.0 149059.0
-20.0 152.0 176018.0
200000
150000
100000
155
160
Fitting Results
157.43971
100.
Tue Jan 08 08:41:53 EST 2002

RUBIDIUM POLARIZATION MEASUREMENT – Ver. 10

STATUS:

PROCESSING

START | STOP | CLEAR | SAVE | PRINT | RESTART | EXIT

READING

PD1+	PD2+	PD1-	PD2-	CLK+	CLK-	(Uh-45)	RbPOL.
0	0	485	302.0	0	1781	-13.3	-95.0
215	676.0	0	0	1781	0	27.2	97.4
0	0	516	308.0	0	1781	-14.5	-100.6
211	666.0	0	0	1780	0	27.3	97.7
366	474.0	0	0	1780	0	7.0	1.7
0	0	490	303.0	0	1781	-13.5	-95.9
213	673.0	0	0	1780	0	27.2	97.4
0	0	474	301.0	0	1780	-12.8	-92.6
210	669.0	0	0	1780	0	27.4	98.2
0	0	491	304.0	0	1781	-13.5	-95.7
216	680.0	0	0	1780	0	27.1	96.8
0	0	506	306.0	0	1780	-14.1	-98.5
212	674.0	0	0	1780	0	27.4	98.0
0	0	503	305.0	0	1780	-14.0	-98.2
220	686.0	0	0	1780	0	27.1	96.6
0	0	503	305.0	0	1781	-14.0	-98.2
208	665.0	0	0	1780	0	27.5	98.5
0	0	484	303.0	0	1780	-13.2	-94.3
217	681.0	0	0	1780	0	27.1	96.9
0	0	488	303.0	0	1780	-13.4	-95.3
214	675.0	0	0	1781	0	27.2	97.4
0	0	490	304.0	0	1780	-13.4	-95.5
229	704.0	0	0	1780	0	26.8	95.2
0	0	490	303.0	0	1780	-13.5	-95.9
0	0	367	475.0	0	1781	7.0	1.5
209	666.0	0	0	1780	0	27.4	98.2
0	0	473	301.0	0	1781	-12.8	-92.4
204	658.0	0	0	1780	0	27.6	99.0
0	0	480	302.0	0	1781	-13.5	-95.8

21 st

41 st

AVERAGING

Theta_0: 6.7 Asymmetry : 0.99

Alpha : 3.15 Offset : 220.0

NUMBER OF PULSES (+,-):	174	157
<theta+> <theta-> :	23.4 +/- 7.4	-11.4 +/- 6.6
COUNT RATES (PD1+,PD2+,PD1-,PD2-) :	238.9 631.0	472.4 319.2
POLARIZATION (P+,dP+,P-,dP-):	82.34 +/- 0.2	-84.92 +/- 0.1

Sun Jan 20 11:01:51 EST 2002

LAMB – SHIFT POLARIMETER

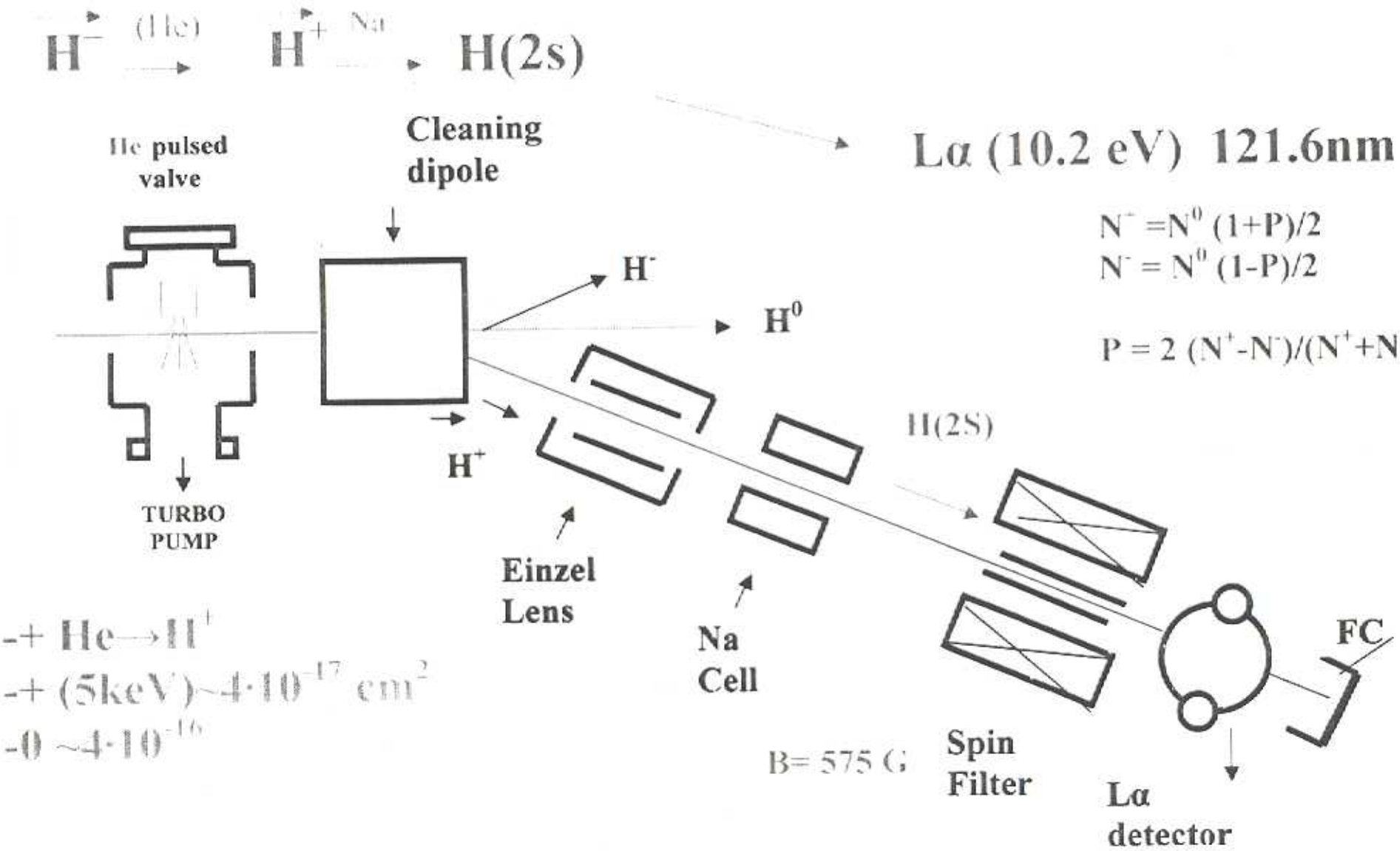

HEWLETT PACKARD HEWLETT PACKARD HEWLETT PACKARD HEWLETT PACKARD

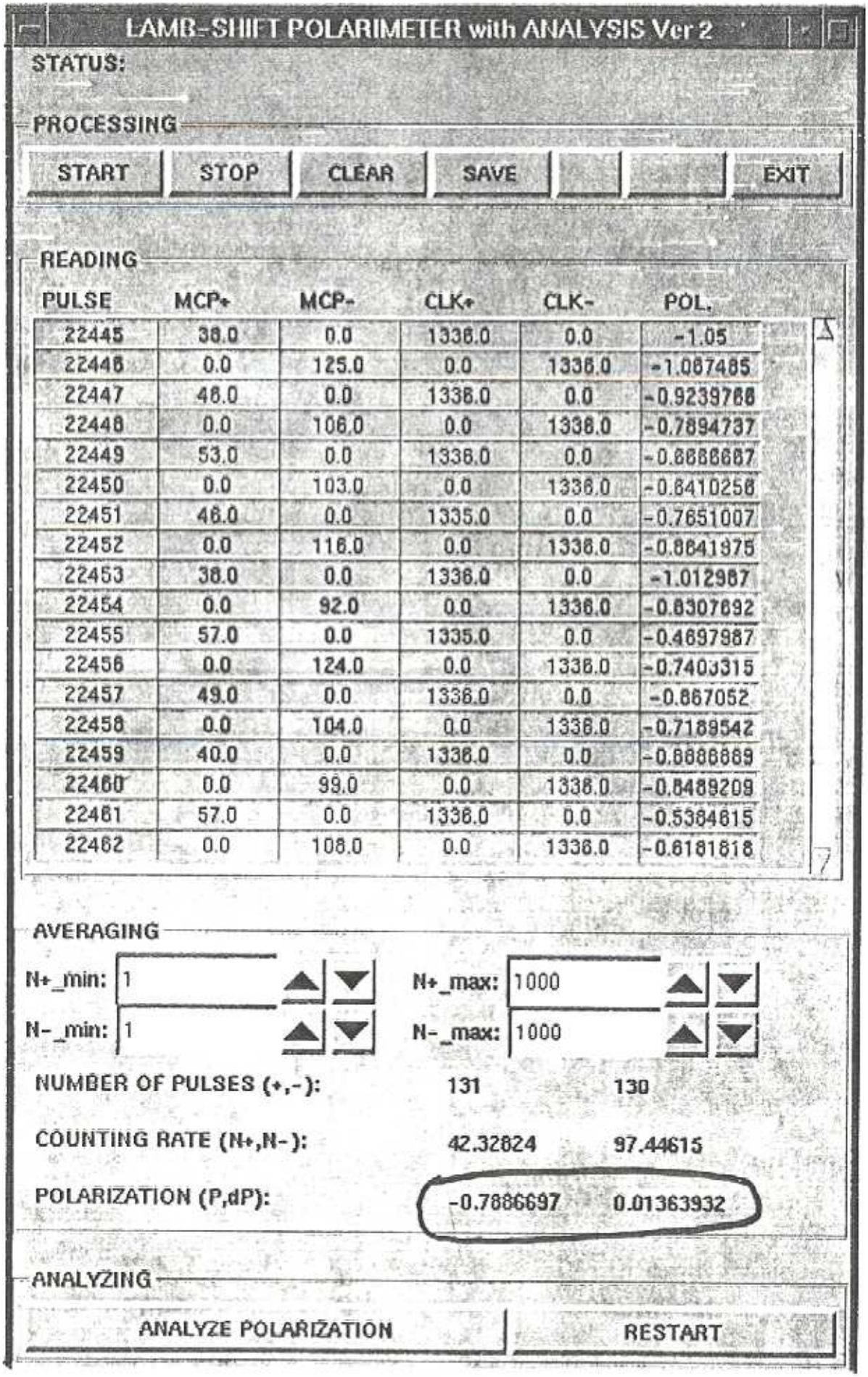

200 MeV POLARIMETER IN HEBT

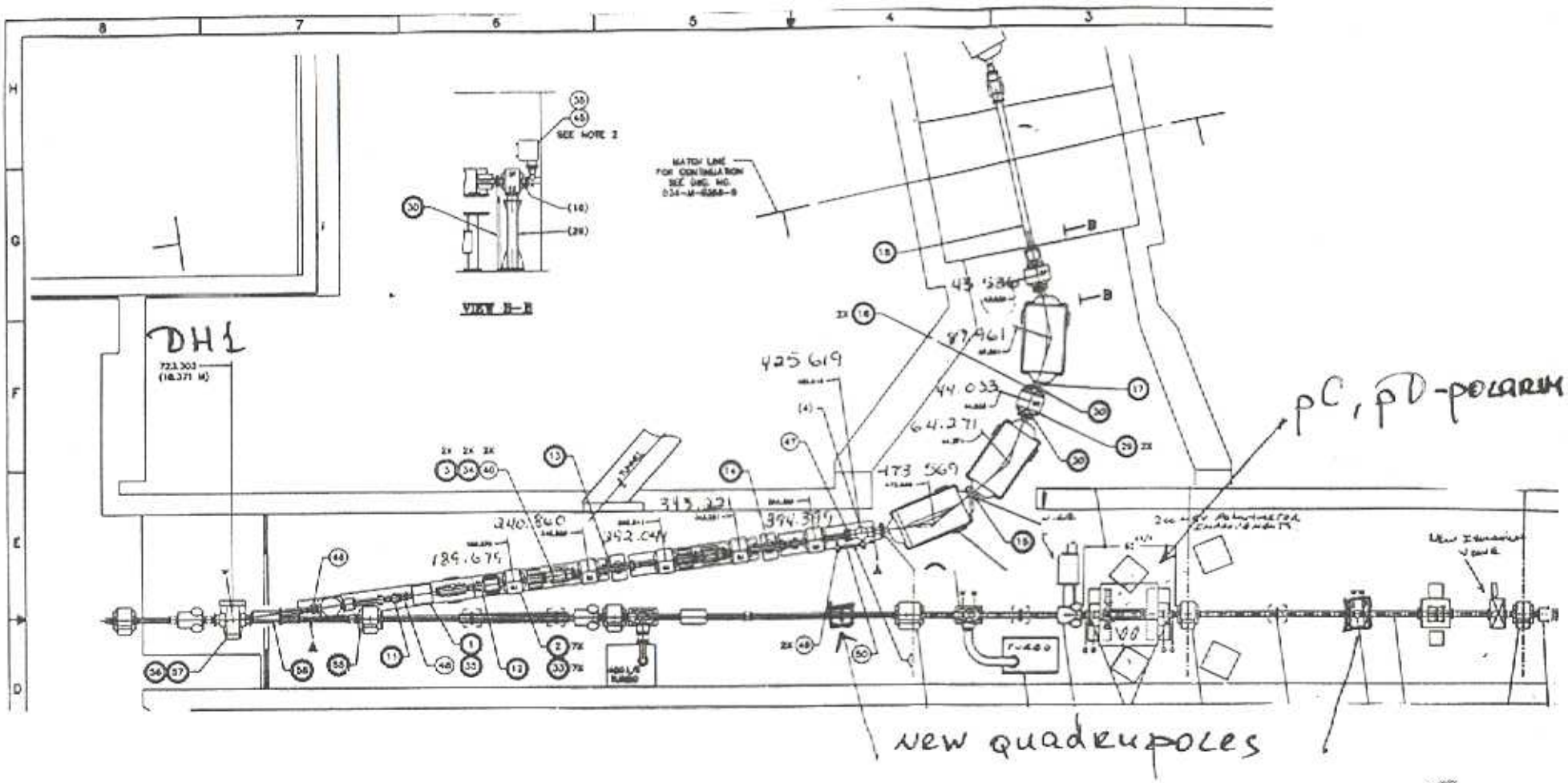

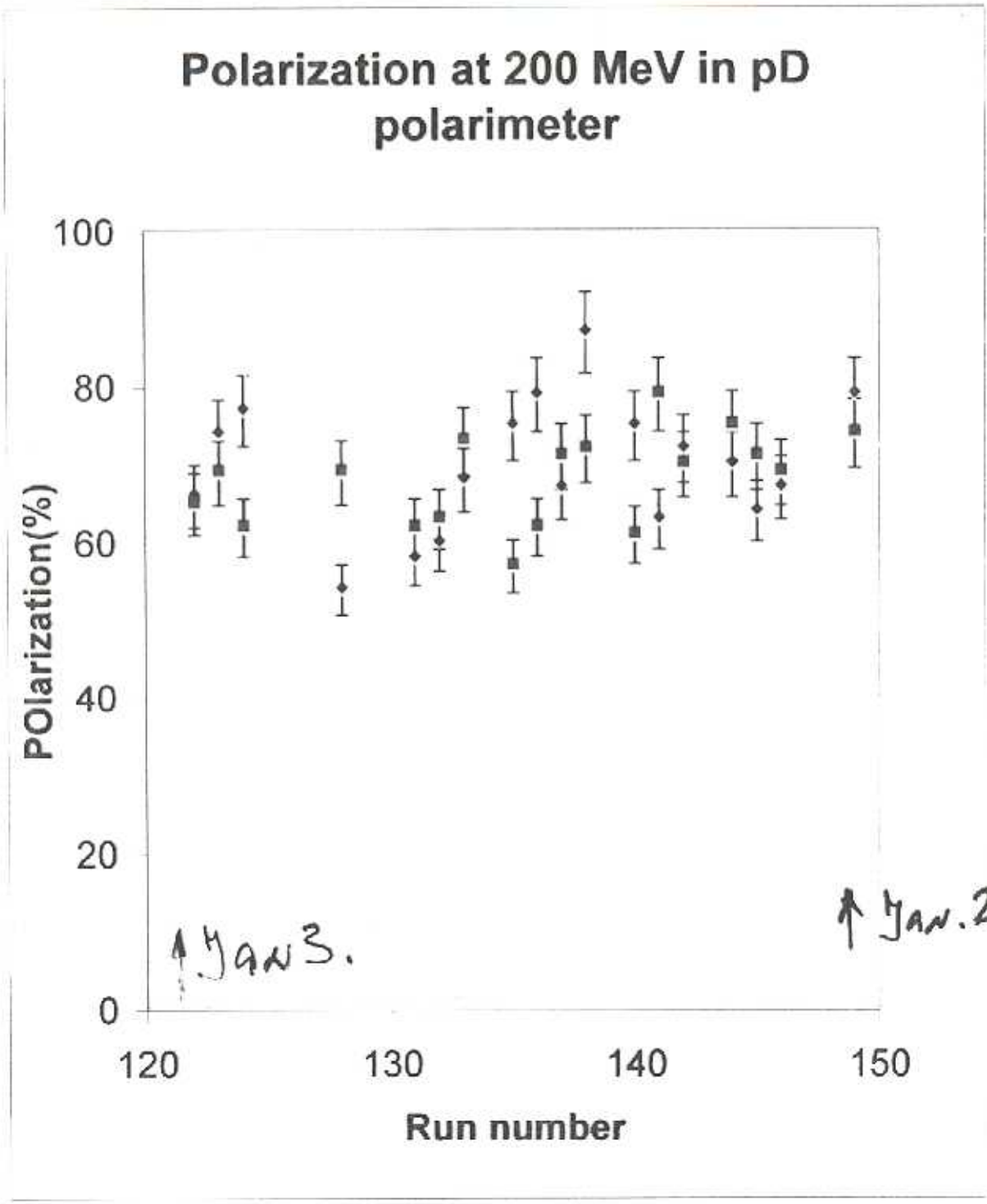

Ed Stephenson analysis for Dec. 01 run

Polarization dilution due to molecular H_2^+ ions from the ECR source.

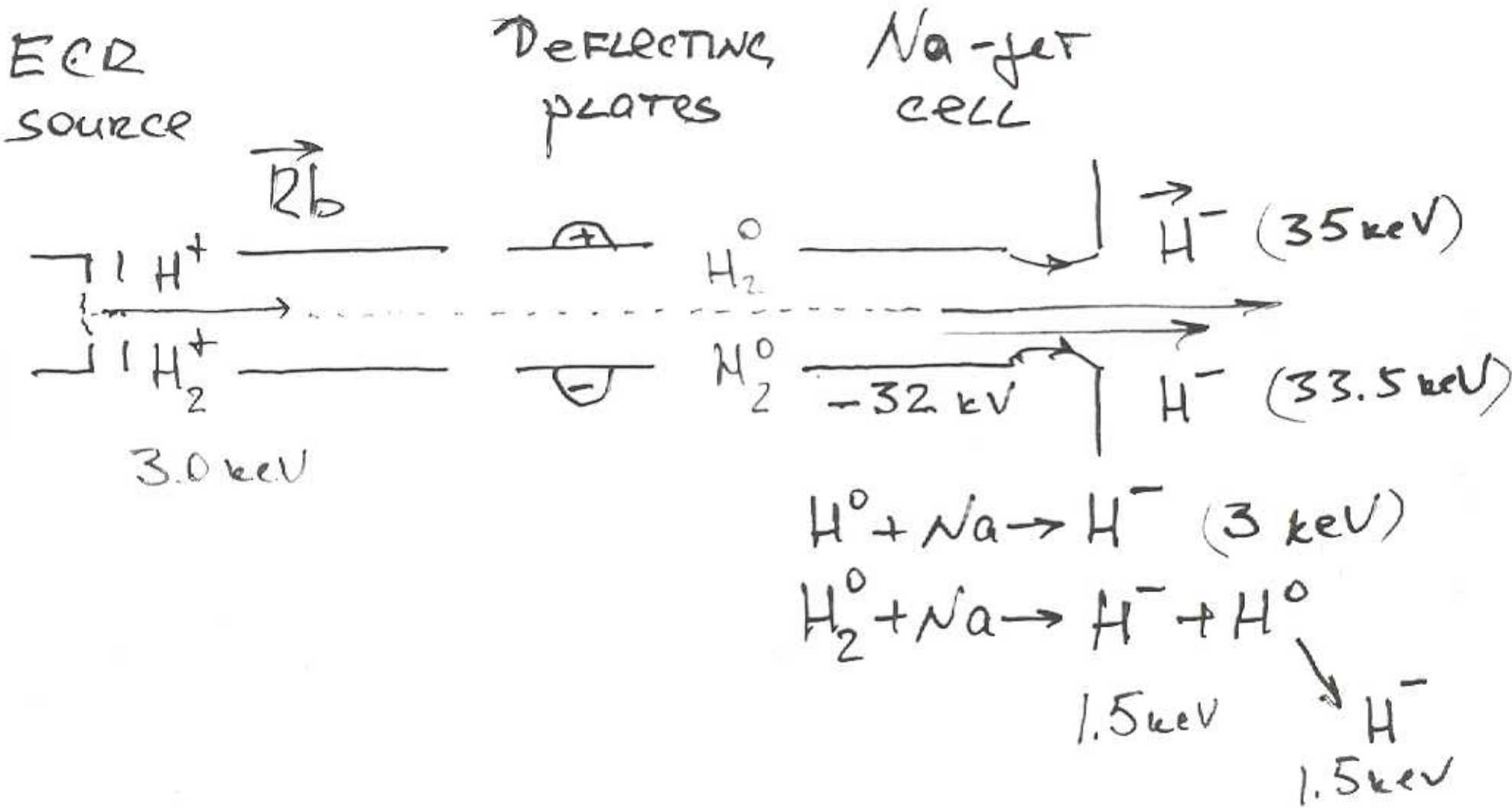

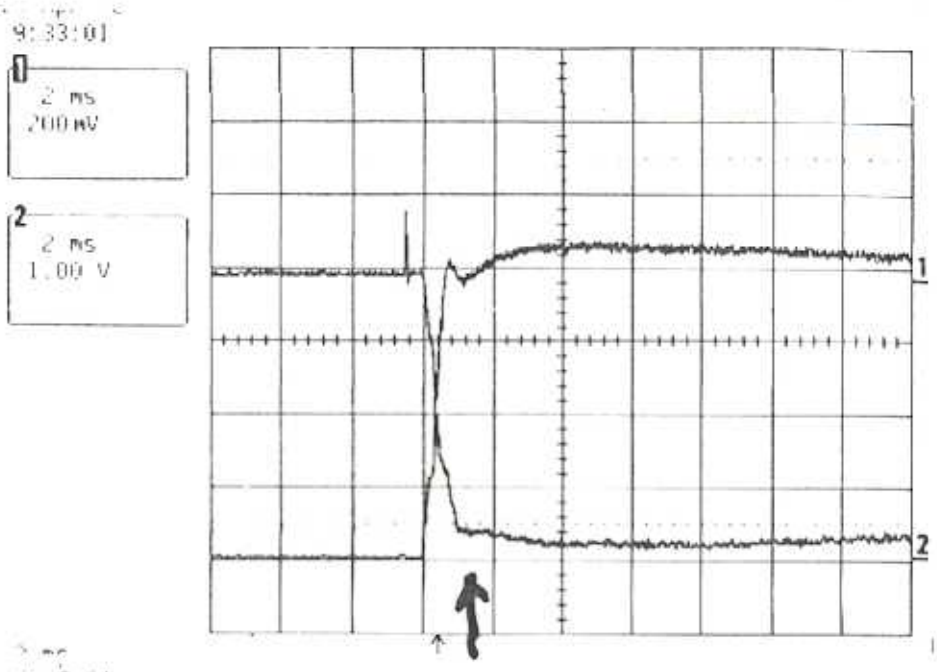

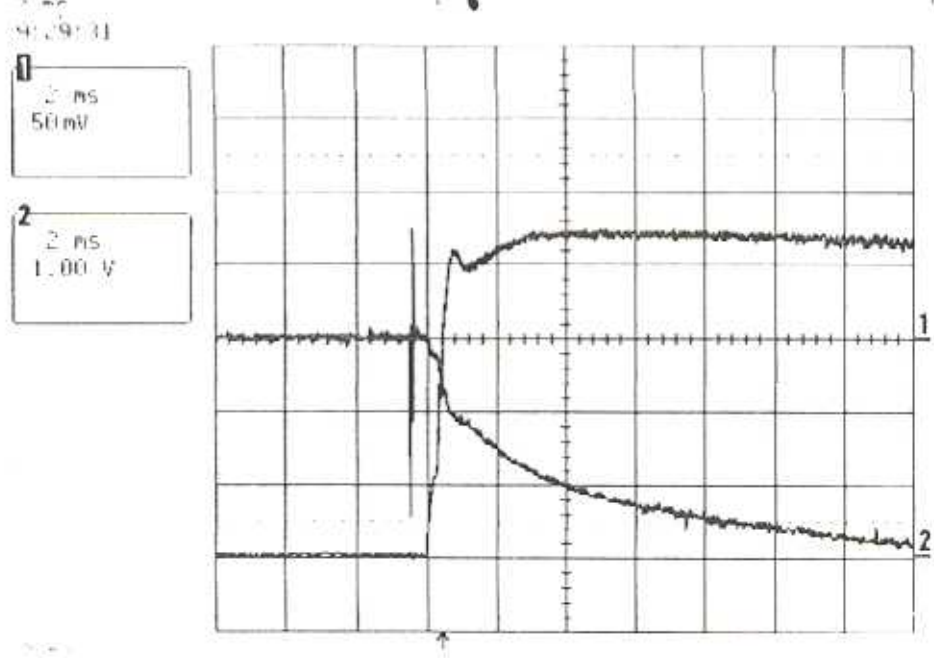

Pulsed ECR operation

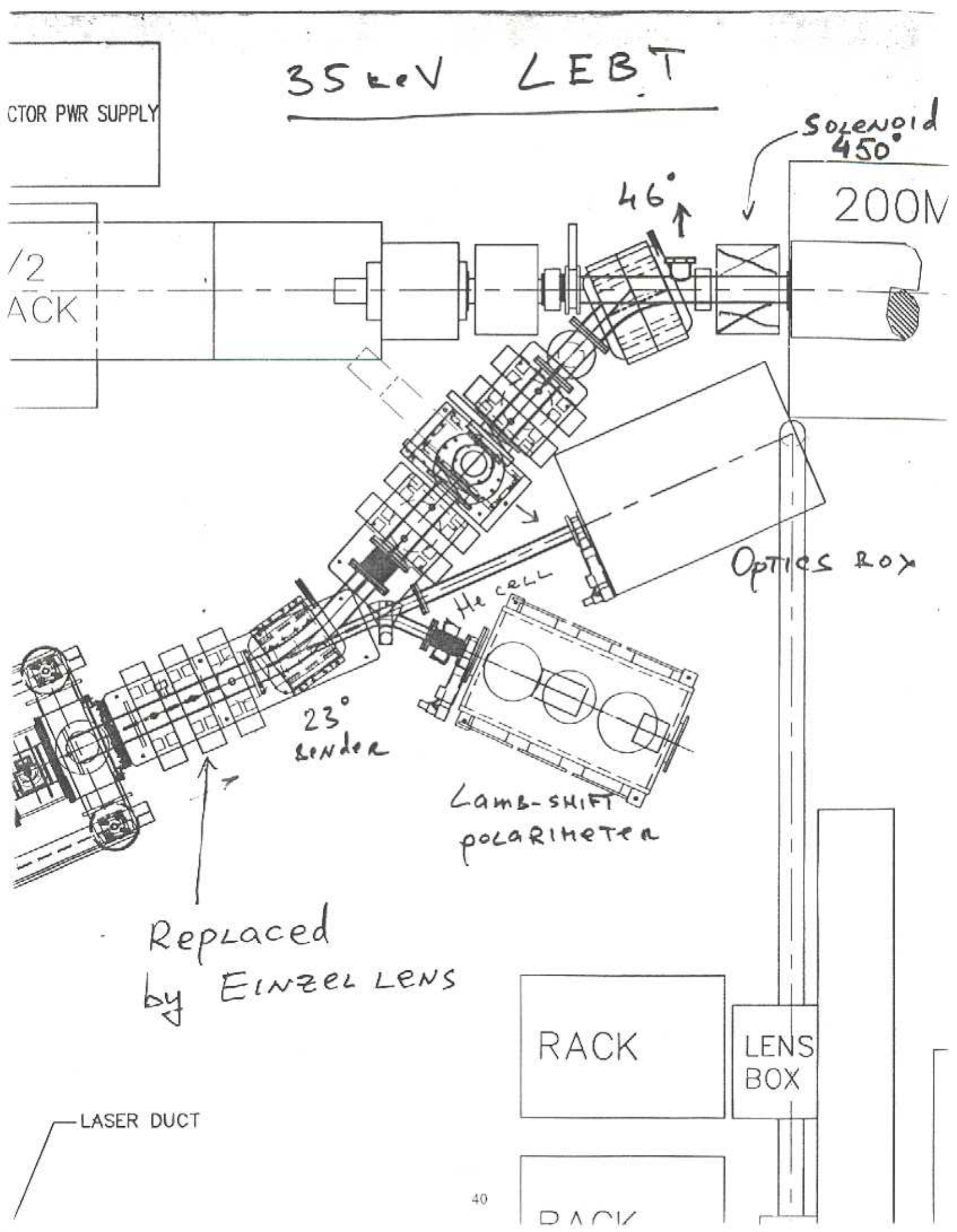
35 keV LEBT
CTOR PWR SUPPLY
/2
ACK
Solenoid
450°
46°
200M
Optics Box
He cell
23°
Bender
Lamb-shift
polarimeter
Replaced
by Einzel Lens
RACK
LENS
BOX
LASER DUCT

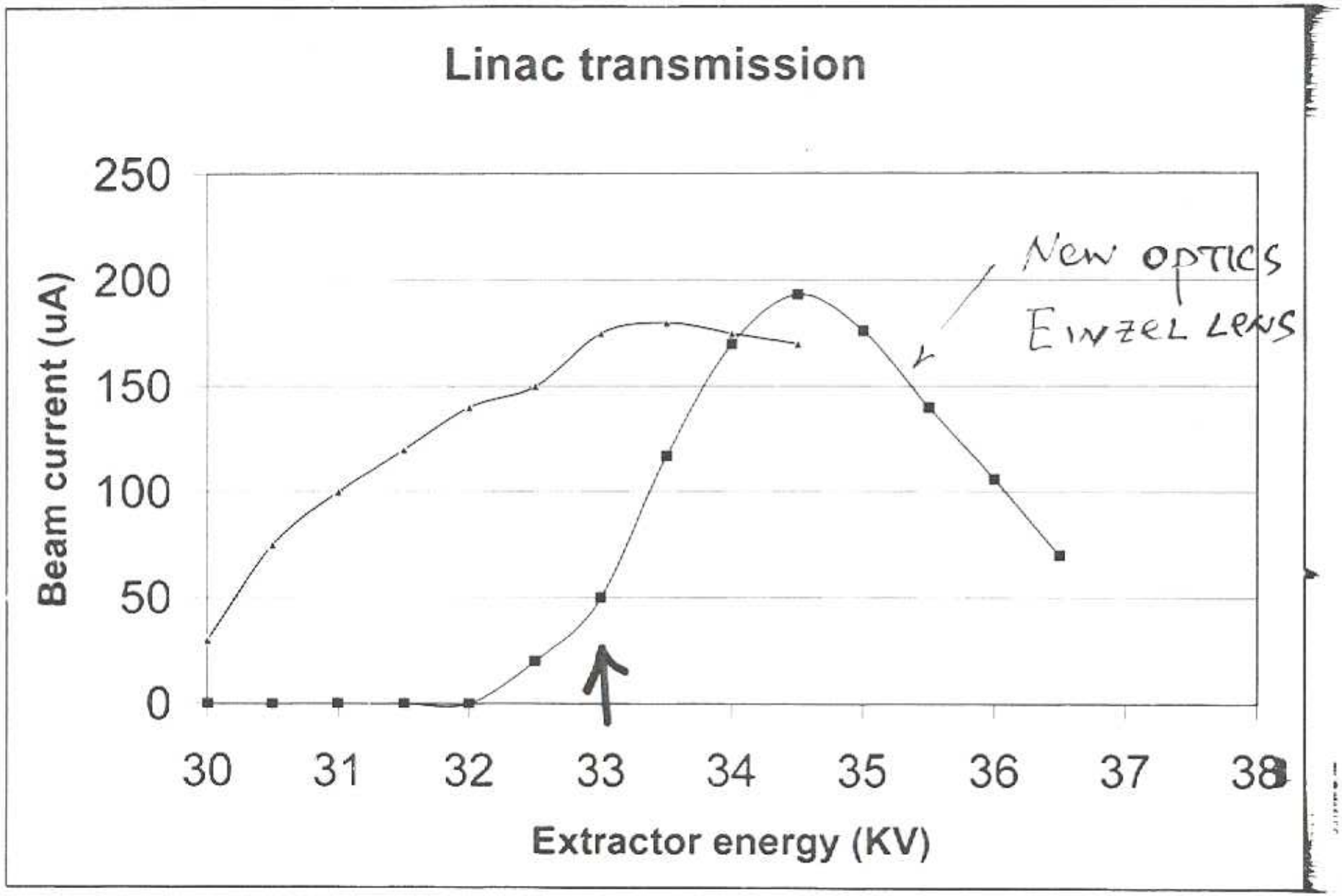
Linac transmission
Beam current (uA)
250
200
150
100
50
0
30
31
32
33
34
35
36
37
38
Extractor energy (KV)
NEW OPTICS
EINZEL LENS

200 MeV POLARIMETER(12 degree-accidental)

STATUS:

PROCESSING

START | STOP | SAVE | EXIT

READING

PULSE	LEFT	RIGHT	CLK+	CLK-	POL.	ACC_L	ACC_R
196	2.0	22.0	0.0	1336.0		0.0	0.0
197	17.0	11.0	1336.0	0.0	-0.9833	0.0	0.0
198	5.0	28.0	0.0	1336.0		0.0	0.0
199	27.0	12.0	1336.0	0.0	-0.904	0.0	0.0
200	12.0	24.0	0.0	1336.0		0.0	0.0
201	24.0	8.0	1336.0	0.0	-0.6777	0.0	0.0
202	10.0	19.0	0.0	1335.0		0.0	0.0
203	24.0	10.0	1336.0	0.0	-0.5639	0.0	0.0
204	4.0	29.0	0.0	1335.0		0.0	0.0
205	33.0	7.0	1336.0	0.0	-1.142	0.0	0.0
206	5.0	25.0	0.0	1336.0		0.0	0.0
207	21.0	7.0	1336.0	0.0	-0.9509	0.0	0.0
208	3.0	24.0	0.0	1336.0		0.0	0.0
209	21.0	9.0	1336.0	0.0	-1.007	0.0	0.0
210	7.0	24.0	0.0	1335.0		0.0	0.0
211	27.0	9.0	1336.0	0.0	-0.8463	0.0	0.0
212	12.0	20.0	0.0	1336.0		0.0	0.0
213	32.0	7.0	1336.0	0.0	-0.7551	0.0	0.0
214	8.0	25.0	0.0	1336.0		0.0	0.0
215	28.0	7.0	1336.0	0.0	-0.9017	0.0	0.0
216	9.0	29.0	0.0	1336.0		0.0	0.0
217	18.0	6.0	1336.0	0.0	-0.828	0.0	0.0
218	3.0	27.0	0.0	1335.0		0.0	0.0
219	29.0	9.0	1336.0	0.0	-1.108	0.0	0.0
220	6.0	23.0	0.0	1336.0		0.0	0.0
221	23.0	7.0	1336.0	0.0	-0.9038	0.0	0.0
222	7.0	30.0	0.0	1336.0		0.0	0.0
223	26.0	12.0	1336.0	0.0	-0.8159	0.0	0.0

Left arm events (+,-):	2651.0	790.0
Right arm events(+,-):	974.0	2875.0
POLARIZATION (P,dP):	-0.8352	0.01622

RESET

Sat Apr 06 22:30:23 EST 2002

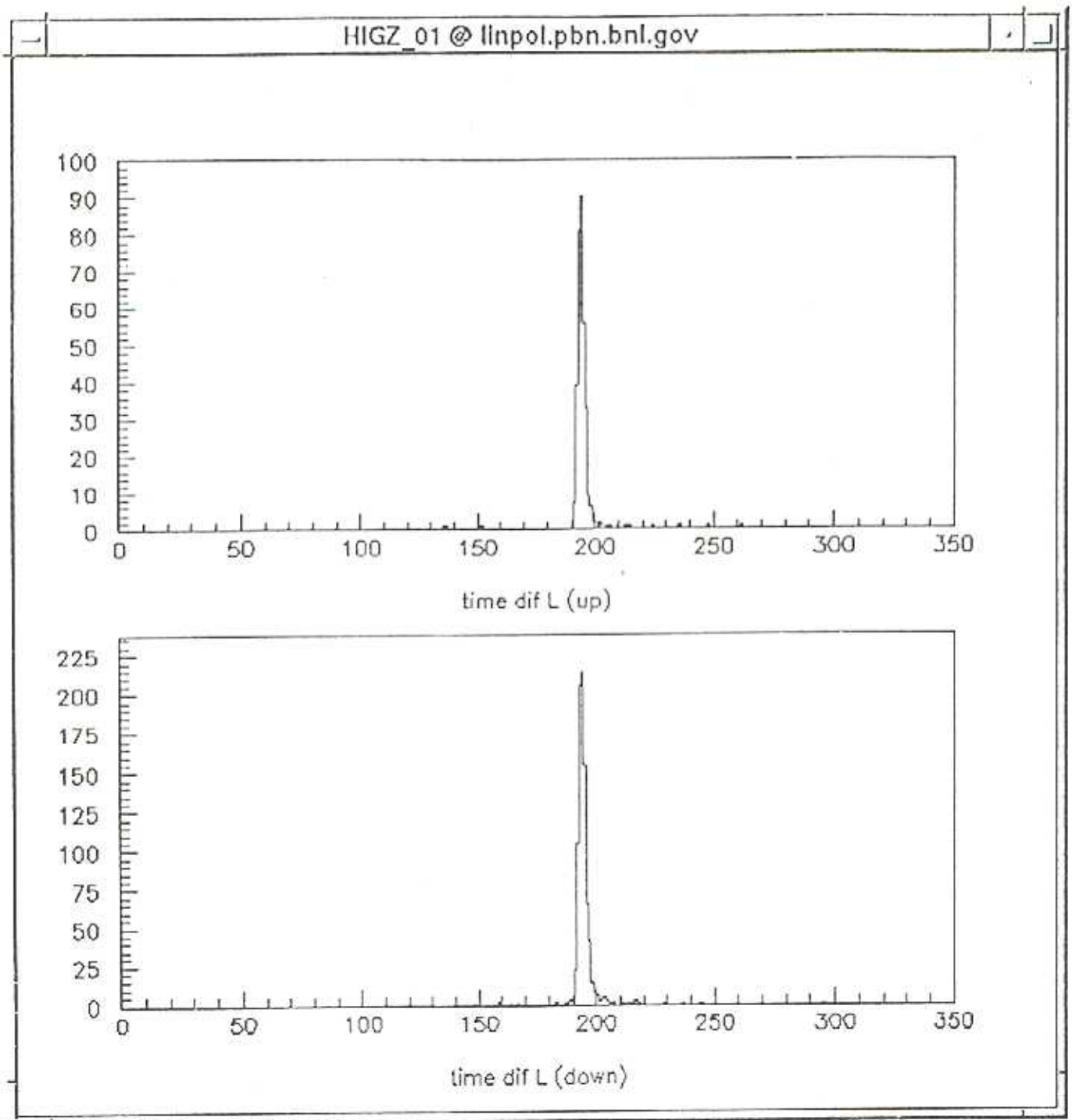


```
PAW-E950: '[24]'>
PAW-E950: '[24]'> vec/create out(6)
 *** VECTOR/CREATE OUT(6): existing vector OUT(6) replaced
PAW-E950: '[25]'>
PAW-E950: '[25]'> for/call asym.f(327,798,844,321)
  polarization -0.8558564      +-  0.3714243E-01
PAW-E950: '[26]'>
```

Anatoli,

Included here is the analysis of runs 158 through 162. The polarization is definitely higher, as you will see from the average at the bottom.

Here are the peak sums with background subtracted:

RN4	LU4	LD4	RU4	RD4
***	***	***	***	***
158	128	251	284	103
159	272	636	578	247
160	140	272	267	110
161	327	798	844	321
162	439	981	988	403

Here are the asymmetries and polarizations:

RN4	EPS	DEPS	P	DP
***	*******	*******	******	*******
158	-.39854	.033267	.78608	.065616
159	-.40105	.02203	.79102	.043453
160	-.3694	.033204	.72861	.065491
161	-.43392	.018831	.85586	.037142
162	-.40131	.017284	.79153	.03409

} 82.0 ± 2.5

⟨158-162⟩ = 80.3 ± 2.0 %

Here is the average polarization:

PBAR = .80332 DPBAR = .019686

It would have been nice to have seen the ratio to the p+C again. I should mention that rates seemed to be lower this time, and the

POLARIZATION

	ΔP	April 6-7 run
Pulsed ECR operation	**3 – 5 %**	+
Lower ECR beam energy	**2 – 3 %**	
LEBT optics optimization for E/2 beam component suppression	**3 – 5 %**	+
Polarization direction alignment	**1 - 2 %**	
OPPIS optimization (superconducting solenoid, lasers, Sona transition)	**3 – 5 %**	+
Polarimeters. Systematic errors.	**3 – 5 %**	+ 10 %

GOAL : Stable operation, P > 80 % for 2002-03 run.

200 MeV POLARIMETERS

Vacuum system upgrade.

Pulsed DH1 operation.

Beam profile monitor.

High-rate detectors.