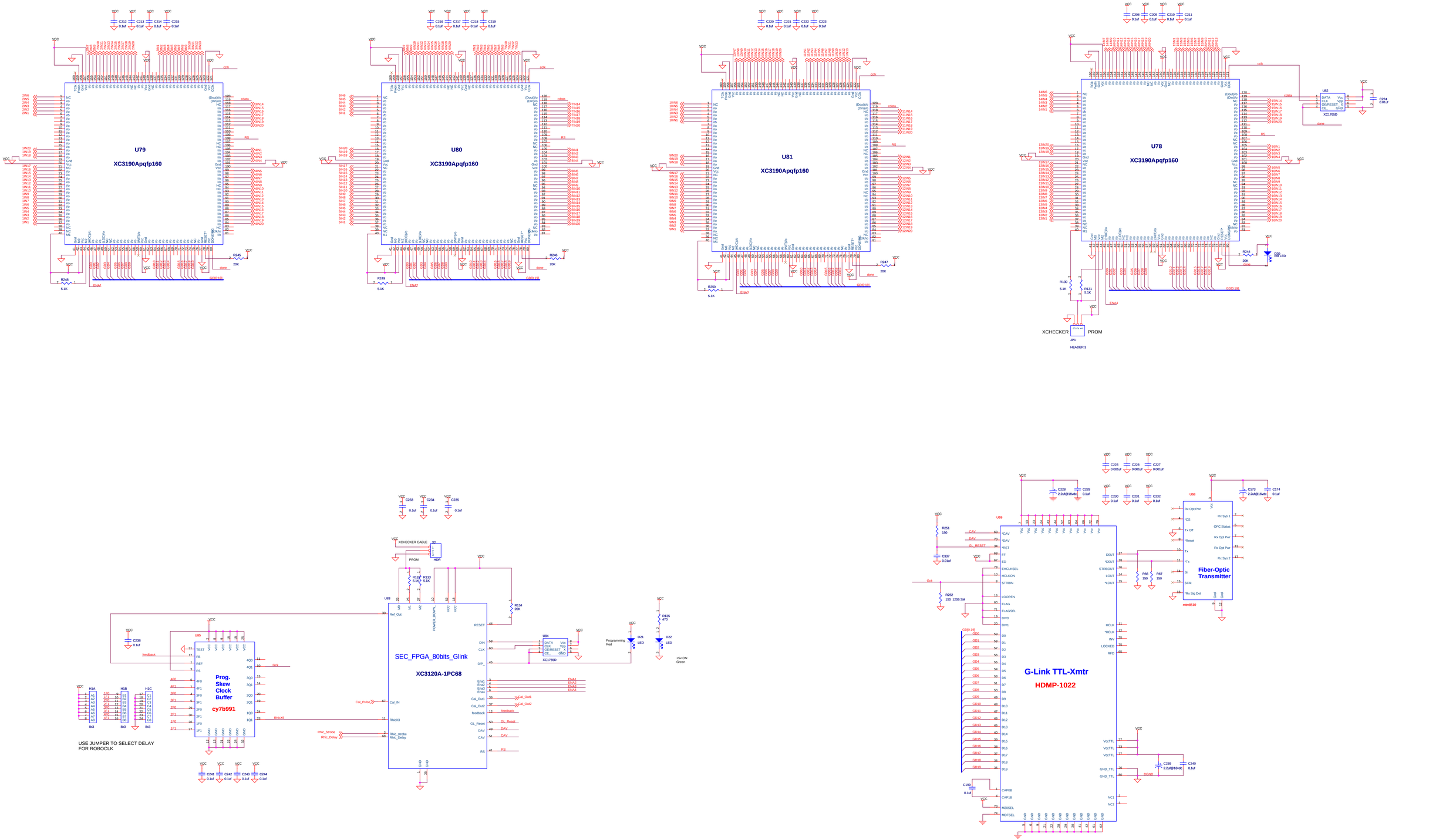

Title	RHIC STAR Trigger MWPC Readout Board
Size: E	Document Number: TRG120-E-1
Rev: A	
Date: Wednesday, October 01, 2003	Sheet 1 of 3

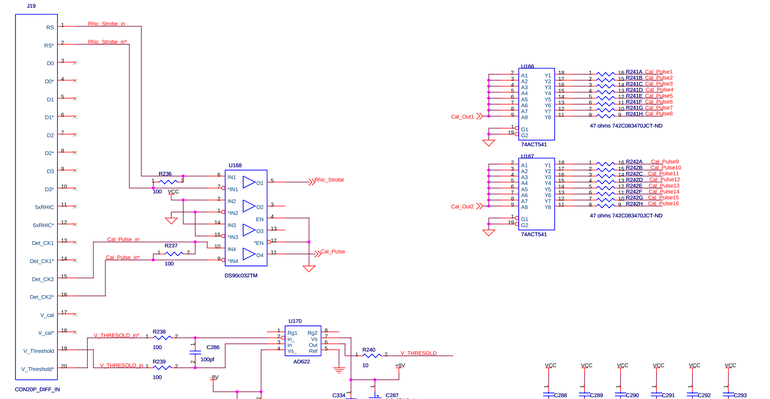

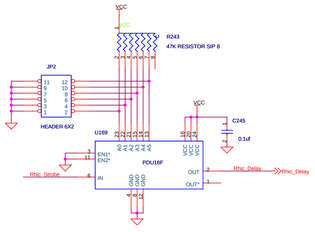

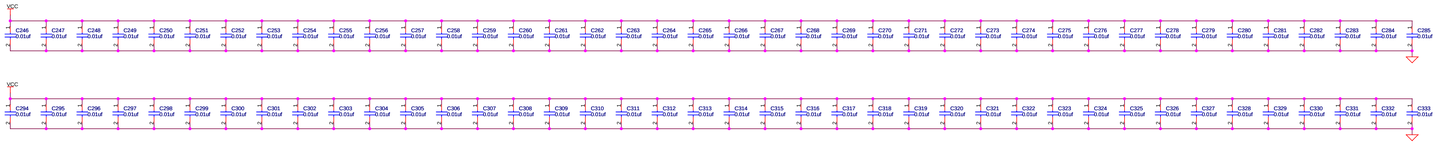

Title	RHIC STAR Trigger MWPC Readout Board		
Size E	Document Number TRG10-E-2		Rev A
Date: Wednesday, October 01, 2003	Sheet 2 of 3		

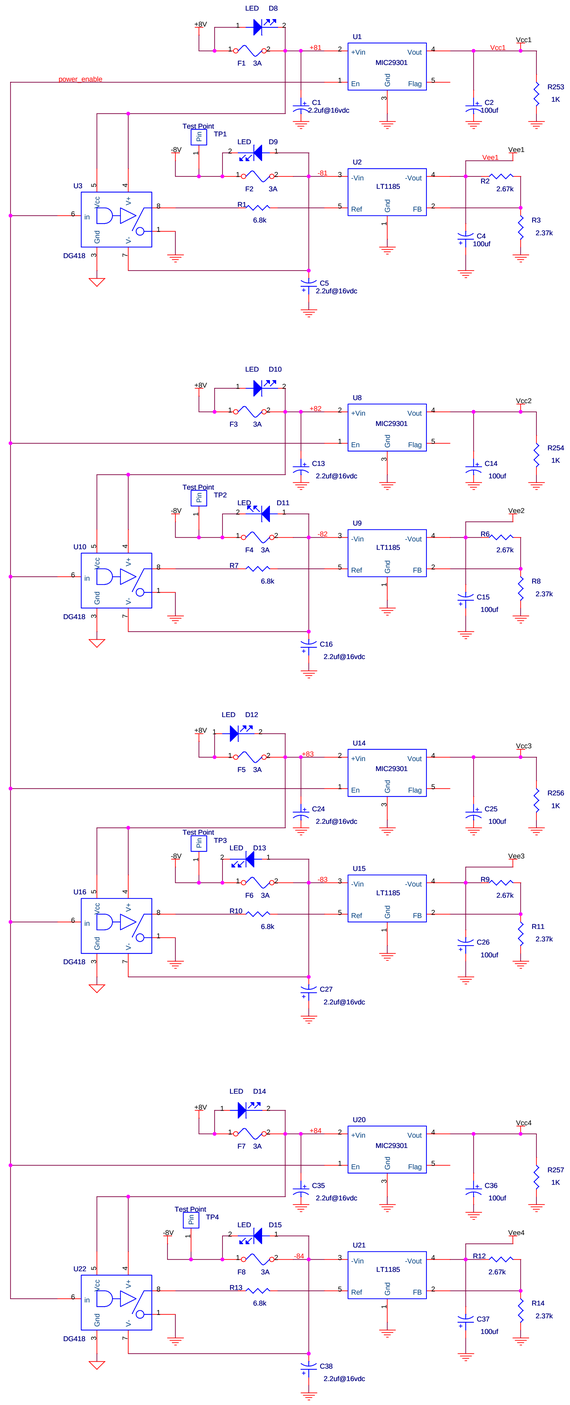

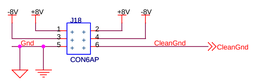

THESE 2 GND PLANES ARE CONNECTED TOGETHER AT THE POWER IN CONNECTOR WITH HEAVY COPPER VIAS

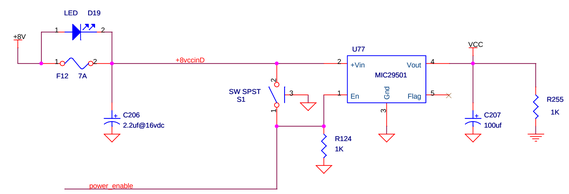

+5V Current = (275 + 150 sas) 425 ma per MWPC FEE BD with 90ds031 driver
-5V Current = (35 + 280 sas) 315 ma per MWPC FEE BD

Number of Regulators used on SEC bd :

Use 1 ea of +/-5V @ 3A regulator for every 4 MWPC FEE boards
(for a total of 4 +5v and 4 of -5v)

Use 1 ea of +5V @ 3A regulator for +5v Quiet on SEC board

Use 1 ea of +5V @ 5A regulator for +5v TTL on SEC board

Use 1 ea of -5V @ 3A regulator for -5v on SEC board

Title	**RHIC STAR Trigger MWPC Readout Board**	
Size D	Document Number TRG120-D-3	Rev A
Date: Wednesday, October 01, 2003	Sheet 3 of 3	