United States
Environmental Protection
Agency

Office of Research and
Development
Washington, DC 20460

EPA/625/R-98/001
August 1998

EPA

National Conference on Management and Treatment of Contaminated Sediments

Proceedings
Cincinnati, OH
May 13-14, 1997

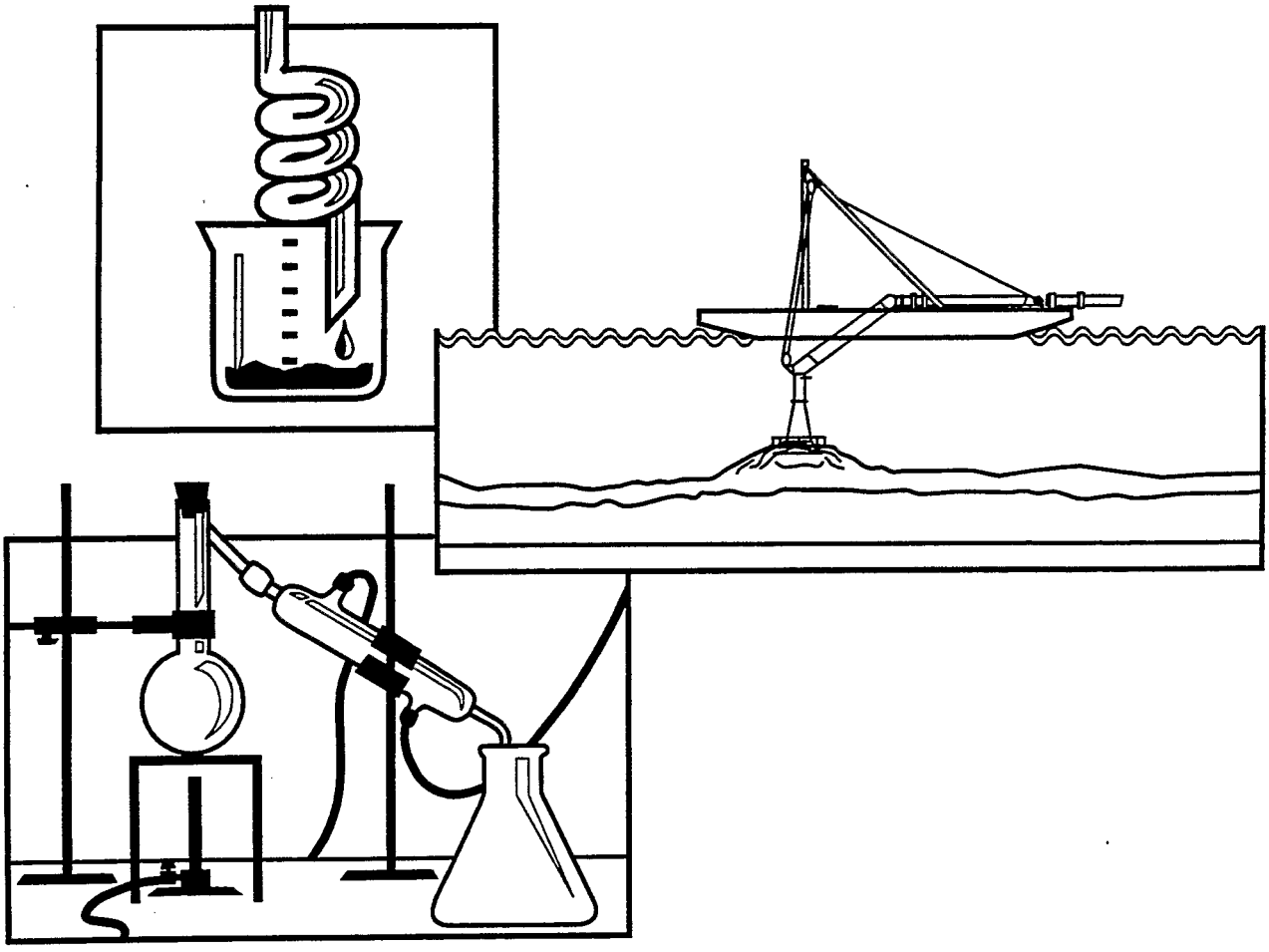

Integrated Sediment Decontamination for the New York/New Jersey Harbor

E. A. Stern
U.S. Environmental Protection Agency, Region 2, New York, NY

K. R. Donato
U.S. Army Corps of Engineers, New York District, New York, NY

N. L. Clesceri
Rensselaer Polytechnic Institute, Troy, NY

K. W. Jones
U.S. Department of Energy, Brookhaven National Laboratory, Upton, NY

Abstract

Disposal of dredged material taken from the New York/New Jersey (NY/NJ) Harbor is problematic because of the presence of inorganic and organic contaminants that under revised testing criteria render it unsuitable for return to the ocean or for beneficial reuse. Decontamination of the dredged material followed by beneficial reuse is one attractive component of the comprehensive dredged material management plan being developed by the U.S. Army Corps of Engineers, New York District. A demonstration program to validate decontamination processes and to bring them into full-scale use in the NY/NJ Harbor is now in progress. Tests of selected technologies have been completed at the bench-scale and pilot-scale (2-15 m^3) levels. Procedures for demonstration testing on scales from 750 m^3 to 75,000 m^3 are being developed with the goal of producing a usable decontamination system by the end of 1999. The overall project goals and present status of the project are reviewed here.

Introduction

The Port of New York and New Jersey requires dredging approximately 4,000,000 m^3 of sediment each year from navigational channels and from many different types of public and private berthing areas. At this time the fraction of dredged material that can be disposed of in the coastal Atlantic Ocean at the Historic Area Remediation Site (HARS) represents perhaps 25% of the total. Other disposal options must be chosen for the bulk of the material. One option or component to dredged material management is to decontaminate the sediments and put the treated material to a beneficial reuse (1).

The cleanup goal is clearly achievable from a purely technical standpoint and has already been demonstrated in many soil remediation projects. However, in the Port there are additional factors to consider in the actual creation of a decontamination processing option. The facility must be large enough for handling and stockpiling an enormous amount of material (some fraction of the total yearly dredging volume) that arrives at highly irregular time intervals throughout the year, and it must do so with a treatment cost which can be borne by the various customers in the Port. The minimal costs for dredging followed by unrestricted ocean disposal can be in the range from \$6 to \$12 per m^3. Additional costs that can be borne presently by the larger of the Port customers are estimated to be no more than \$35 per m^3. A cost decrease is needed to keep the Port viable and competitive for the future. Thus, there is a strong impetus for the development of beneficial reuses which can generate a revenue stream that can be combined with a tipping fee of the magnitude just mentioned to give the foundation for an economically viable business.

In addition, there is need for substantial capital funding for decontamination infrastructure construction. The largest volume of dredged material is generated by the U.S. Army Corps of Engineers and the Port Authority of New York/New Jersey. Under present contract procedures, it is impossible to provide assurances of long-term streams of materials to a vendor and/or facility capable of decontaminating the dredged material. This makes the development of a business difficult using private funding alone since the risks to potential investors is very high. Thus, in the long term, the use of innovative public-private partnership arrangements may be necessary at the inception of individual enterprises.

The purpose of this report is to summarize, from a technical and practical standpoint alone, the work that is in progress in the Harbor of New York and New Jersey, as called for under the Water Resources Development Acts (WRDA) of 1992 and 1996. This project is aimed at development and construction of a large-scale decontamination facility as part of a stable long-term solution to the handling of dredged material in the region. Earlier summaries have been given by Stern et al. (2) and Jones et al. (3). Cost considerations will be presented elsewhere (4).

Project Components

There are many components contained in a project designed to produce an operating facility for dredged material processing and decontamination. There are also many different research, university, and industrial sector institutions working on tasks that relate to the needs of the project. However, in general, there is no pathway for coordinating and integrating the data and results produced into a systems package that is useful for meeting specific decontamination goals for a range of sediment contaminants. As a result, the present work has components that span a range of research and development activities from relatively basic science to applied engineering and business activities. Some of the key components that are needed in producing an operational treatment facility are:

- Treatment train development
  - Selection and testing of treatment technologies
  - Pretreatment (physical separation/dewatering)
  - Facility siting
  - Facility design and construction
  - Technology and facility permitting
- Fundamentals
  - Sediment toxicity identification evaluations
  - Toxicity testing of post-treated material
  - 3-D visualization of contaminant distributions to assist in making dredging decisions
  - Environmental and human health risk assessment. This includes risks from the material and from operation of the decontamination procedures.
  - End-use criteria. How clean is clean?
- Operational requirements
  - Public outreach
  - Business development for beneficial reuse products
  - Develop cost- and profit-sharing public-private partnerships for operation of the facility

Characteristics of NY/NJ Harbor Dredged Material

The physical characteristics of the sediments found in the Port are generally very fine-grained silts and clays (80-95%) with a small fraction of larger grain sizes and large-size debris. The total organic content of Harbor sediments ranges from 3-10%. The bulk material has the consistency of a black mayonnaise or gel. The solids content of the dredged material is 30% to 40% when obtained using a conventional clam-shell bucket dredge. The NY/NJ Harbor estuarine salinity ranges from 1.5 to 28 parts per thousand. The concentrations of major contaminants and metals found in dredged material from Newtown Creek, NY, are shown in Table 1. This is of interest in considering possible pathways for beneficial reuse as manufactured soil, cement, or glass.

Inorganic contaminants include heavy metals such as cadmium, mercury, lead, arsenic, and chromium. Organic compounds include dioxins and furans, polychlorinated biphenyls (PCBs), polynuclear aromatic hydrocarbons (PAHs), petroleum hydrocarbons, and chlorinated pesticides and herbicides. Generally, the material is chemically stable and is found to pass the toxicity characteristic leaching program (TCLP) for testing the leachability of contaminants. The concentrations found in Newton Creek sediments are not high enough to warrant classification as hazardous materials, but are sufficient to cause them to fail bioaccumulation and toxicity tests required prior to ocean disposal and specifications for soil cleanup levels in New York and New Jersey. Contaminant concentrations found in Newtown Creek, NY, and in Port Newark, NJ, sediments are also compared to several soil criteria for the States of New York and New Jersey in Table 1. These chemicals are characteristic of a historically used, heavily industrialized urban port.

Results of Bench- and Pilot-scale Testing Programs

Technologies that have been tested have fallen into those that are carried out (1) at ambient or at least low temperatures, (2) intermediate temperatures that do not destroy the organic constituents, and (3) high temperatures above the decomposition point of the organic compounds. The wide variety of contaminants and differing concentration levels make it plausible to search for technologies that can be applied to specific concentration levels. In addition, the low-temperature technologies may be more acceptable to the local and regulatory communities and they may be easier to permit. The

Table 1. Contaminant Concentrations of Untreated As-Dredged NY/NJ Harbor Sediments (Dry Weight)

Contaminant	Newtown Creek (Bench)	Newtown Creek (Pilot)	Port Newark	NJ Non-Resid.[1]	NJ Resid.[2]	NY Resid.[3]
2,3,7,8 TCDD (ppt)	42	81	66	—	—	—
OCDD (ppt)	17,463	38,881	5560	—	—	—
TCDD/TCDF TEQ (ppt)	518	1570	109	—	—	—
Total PCBs (ppm)[4]	1.55	1.78	0.141	2	0.49	1
Anthracene (ppb)	3702	1074	167	10,000	10,000	50,000
Benzo(a)anthracene (ppb)	4484	8970	283	4000	900	224
Chrysene (ppb)	4564	9973	365	40,000	9000	400
Total PAHs (ppb)[4]	113,000	130,000	30,000	—	n/a[5]	396,500
Arsenic (ppm)	33	42	15	20	20	7.5
Cadmium (ppm)	37	47	6	100	1	1
Chromium (ppm)	376	432	171	—	—	10
Copper (ppm)	1171	1410	212	600	600	25
Lead (ppm)	617	631	300	600	400	SB[6]
Mercury (ppm) total	1.3	3.7	2.2	270	14	0.1
Zinc (ppm)	1725	2070	526	1500	1500	20

[1] NJ Department of Environmental Protection. Non-residential soil, direct contact. J.J.A.C. 7:26D, revised 7/11/96.
[2] NJ Department of Environmental Protection. Residential soil, direct contact. J.J.A.C. 7:26D, revised 7/11/96.
[3] NY Department of Environmental Conservation. Recommended soil cleanup objectives. HWR-94-046 (Revised). January 24, 1994.
[4] See Reference 12.
[5] n/a = not available.
[6] SB = Site background.

higher temperature technologies may be more applicable to the most contaminated sediments that are found outside of navigational channel and depositional areas. These areas may lend themselves to "Hot Spot" remediation. High temperature technologies may well produce beneficial use products that have higher resale values. Examples of the technologies that fit each sediment contamination category are:

- Low contamination. Solidification/stabilization, manufactured soil, and phytoremediation. U.S. Army Corps of Engineers (5)
- Low-to-medium contamination. Sediment washing and chemical extraction. BioGenesis Enterprises Inc. (6)
- Medium contamination. Solvent Extraction. Metcalf & Eddy, Inc. (7)
- High contamination. High-temperature rotary kiln. Institute of Gas Technology (8)
- High contamination. High-temperature plasma torch. Westinghouse Electric Corporation, Science & Technology Center (9)

Taken together these technologies form the basis of an integrated "treatment train" for the management of contaminated dredged material from the Port of NY/NJ or other locations worldwide.

U.S. Army Corps of Engineers

The simplest approach to decontamination is the preparation of a manufactured soil using dredged material. The advantages of this method include relatively low cost and easy implementation with no need for complex capital equipment or dewatering of the material. The disadvantages are that establishing growth of cover plants may be difficult since degradation of some compounds may be slow, and trophic transfer issues could restrict use as a topsoil since removal of contaminants is an *in-situ* process that proceeds slowly and needs long-term monitoring.

The soil is produced by mixing the sediment with a cellulose material such as wood chips, sawdust, or yard-waste compost, cow manure or sewage sludge, and lime and fertilizer as needed. Specific mixtures that were tested contained dredged material, sawdust or yard waste, and cow manure. The tests showed that the optimum dredged material concentration was about 30% of the soil mixture by weight, thus giving an overall

reduction in contaminant concentrations through dilution. These concentrations are compared to New York and New Jersey standards for residential and industrial soil cleanup standards in Table 2. It was found that some of the contaminant concentrations exceeded the soil cleanup criteria. Hence, a decontamination procedure may be advisable for producing a soil meeting state standards. The suitability of the soil for growth of different plant species was tested for tomato, marigold, rye grass and vinca. The soil was most suitable for the growth of rye grass.

BioGenesis

A schematic diagram of the sediment-washing equipment of BioGenesis is shown in Figure 1. The first step in the process is to use surfactants combined with a water jet to break up agglomerates and solubilize hydrocarbons coating the individual sediment grains. The second step combines a chelating agent and high-velocity water jet that further strip organic coatings from the particles and remove metals sorbed to the base materials. The water-solid mixture is then passed through a cavitation-oxidation unit to break up the organic components, followed by steps to separate the processed solids from the water which contains the remains of the contaminants. The water is processed to meet standards required for disposal at wastewater treatment plants. The testing program to date has been confined to study of the contaminant reduction efficiency. Results obtained for reduction of PAHs and metals in one experiment are shown in Table 3. These values are compared to the standards for soil cleanup given by NY and NJ. Similar values have been obtained for other contaminants.

The bench-scale experimental results indicate that it is possible to expect reductions that exceed 90% in a single pass through the apparatus. Results found from sequential passes through the system have been encouraging and make it plausible to think that further improvements in the system efficiency can be attained. The next step would be testing on a pilot-scale level of up to 1000 yd^3. The final product can be combined with the manufactured soil approach of the Corps of Engineers to produce a material suitable for unrestricted use as long as the dredged material contamination can be reduced to acceptable levels consistent with those mentioned above.

Table 2. Summary of Results for U.S. Army Corps of Engineers Waterways Experiment Station Bench-scale Manufactured Soil Demonstration: 30% Dredged Material, 50% Sawdust, 10% Cow Manure

Contaminant	As Dredged	Man. Soil 30% As Dredged	Percent Reduction	NJ Non-Resid.[1]	NJ Resid.[2]	NY Resid.[3]
2,3,7,8 TCDD (ppt)	41.5	15.2	63.4	—	—	—
OCDD (ppt)	17463	5290	69.7	—	—	—
TCDD/TCDF TEQ (ppt)	518	182	64.9	—	—	—
Total PCBs (ppm)[4]	1.22	0.782	68.0	2	0.49	1
Anthracene (ppb)	3700	1590	57.0	10,000	10,000	50,000
Benzo(a)anthracene (ppb)	4480	3130	30.1	4	900	224
Chrysene (ppb)	4560	3720	18.4	40	9000	400
Total PAHs (ppb)[4]	57,900	35,800	38.2	—	n/a[5]	396,500
Arsenic (ppm)	33.5	12.5	62.7	20	20	7.5
Cadmium (ppm)	3.0	7.9	78.6	100	1	1
Chromium (ppm)	377	140	62.9	—	—	10
Copper (ppm)	1172	393	66.5	600	600	25
Lead (ppm)	617	331	46.4	600	400	SB[6]
Mercury (ppm) total	1.29	—	—	270	14	0.1
Zinc (ppm)	1725	514	70.2	1500	1500	20

[1] NJ Department of Environmental Protection. Non-residential soil, direct contact. J.J.A.C. 7:26D, revised 7/11/96.
[2] NJ Department of Environmental Protection. Residential soil, direct contact. J.J.A.C. 7:26D, revised 7/11/96.
[3] NY Department of Environmental Conservation. Recommended soil cleanup objectives. HWR-94-046 (Revised). January 24, 1994.
[4] See Reference 12.
[5] n/a = not available.
[6] SB = Site background.

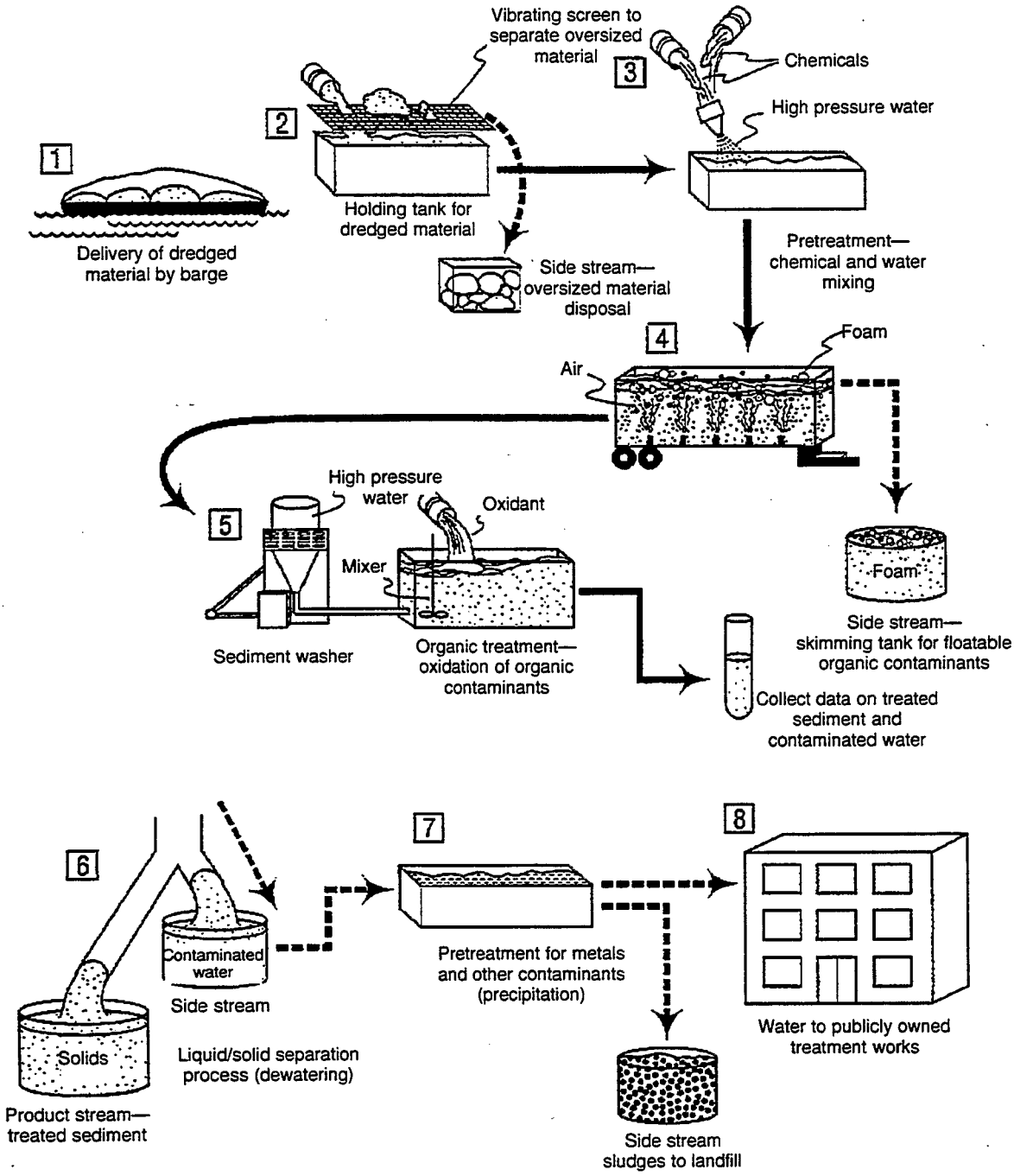

Figure 1. Schematic diagram showing the steps in the sediment washing and chemical extraction processing system developed by BioGenesis Enterprises.

Metcalf & Eddy

Solvent extraction procedures are similar to the sediment washing process of BioGenesis in the sense that a chemical solvent is used to remove the surface coatings of contaminated materials. Removal of volume contamination depends on the porosity of the material and the treatment time as well as on the details of the chemical interactions of the contaminants with the bulk material of the sediment. A block diagram of the apparatus used by Metcalf & Eddy is shown in Figure 2. The extraction process operated at a temperature of 37.7-60.0°C and employed isopropyl alcohol and isopropyl acetate as the solvents. These conditions require more elaborate apparatus than the BioGenesis process and require more attention to operating conditions because of fire/explosion hazards. Pilot-scale experiments were carried out using multiple passes through the system and in a continuous mode. Results obtained for decontamination are shown in Table 4 for a 5-cycle treatment. This particular experiment did not use a chelator and the metal levels are not substantially reduced.

Table 3. Summary of BioGenesis Sediment-Washing Process

Contaminant	As-dredged	Treated	Percent Reduction	NJ Non-Resid.[1]	NJ Resid.[2]	NY Resid.[3]
Anthracene (ppb)	771	177	77.0	10,000	10,000	50,000
Benzo(a)anthracene (ppb)	1793	234	86.9	4000	900	224
Chrysene (ppb)	1994	286	85.7	40,000	9000	400
Total PAHs (ppb)[4]	19,502	3207	83.6	—	n/a[5]	396,500
Arsenic (ppm)	22.2	12.8	42.3	20	20	7.5
Cadmium (ppm)	18.2	1.4	92.3	100	1	1
Chromium (ppm)	226	63	72.1	—	—	10
Copper (ppm)	n/a[5]	n/a[5]	—	600	600	25
Lead (ppm)	454	60	86.8	600	400	SB[6]
Mercury (ppm) total	13.1	0.3	97.7	270	14	0.1
Zinc (ppm)	—	n/a[5]	—	1500	1500	20

[1] NJ Department of Environmental Protection. Non-residential soil, direct contact. J.J.A.C. 7:26D, revised 7/11/96.
[2] NJ Department of Environmental Protection. Residential soil, direct contact. J.J.A.C. 7:26D, revised 7/11/96.
[3] NY Department of Environmental Conservation. Recommended soil cleanup objectives. HWR-94-046 (Revised). January 24, 1994.
[4] See Reference 12.
[5] n/a = not available.
[6] SB = Site background.

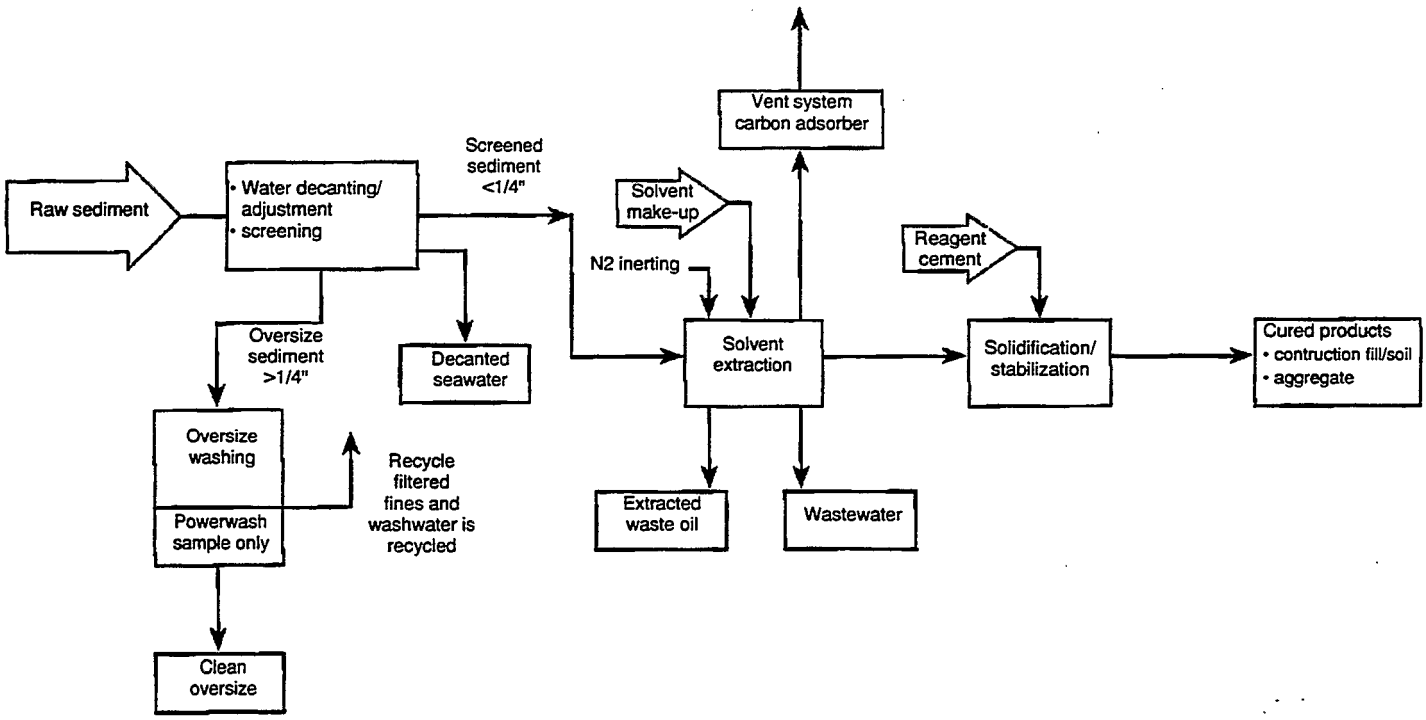

Figure 2. Schematic diagram showing the Metcalf & Eddy solvent extraction process for treatment of dredged material.

The testing included production of stabilized materials from both untreated and treated dredged material by Metcalf & Eddy, Inc. and the U.S. Army Corps of Engineers Waterways Experiment Station. The results are summarized in Table 5. It can be seen that compressive strengths of over 100 pounds per square inch can be achieved. These values are comparable to values reported by Tanal et al. (10) and Samtani et al. (11) for a project carried out on dredged material from the Port of Boston. Other relevant physical properties of the solidified and stabilized dredged material are also given in Table 5.

Institute of Gas Technology

The Institute of Gas Technology demonstrated the use of a rotary kiln for the destruction of organic compounds and immobilization of metals in the cementitious structure. A block diagram of the apparatus is shown in Figure 3. The process requires adding common mineral compounds to optimize the overall composition of the material for pozzolan production. The technology employed is that commonly in use at existing cement plants. This is encouraging since it means that existing off-line facilities could possibly be devoted to processing

Table 4. *Summary of Results for the Metcalf & Eddy Solvent Extraction Process*

Contaminant	As-dredged	Treated 7-stage	Percent Reduction	NJ Non-Resid.[1]	NJ Resid.[2]	NY Resid.[3]
2,3,7,8 TCDD (ppt)	35	10	71	—	—	—
O CDD (ppt)	13411	3047	77	—	—	—
TCDD/TCDF TEQ (ppt)	648	106	84	—	—	—
Total PCBs (ppm)[4]	1.54	0.029	98.1	2	0.49	1
Anthracene (ppb)	62,900	1292	97.9	10,000	10,000	50,000
Benzo(a)anthracene (ppb)	38490	894	97.7	4000	900	224
Chrysene (ppb)	33.76	1.01	97.0	40,000	9000	400
Total PAHs (ppb)[4]	858,000	17,000	98.0	—	n/a[5]	396,500
Arsenic (ppm)	68	85	—	20	20	7.5
Cadmium (ppm)	29	32	—	100	1	1
Chromium (ppm)	319	373	—	—	—	10
Copper (ppm)	1090	1310	—	600	600	25
Lead (ppm)	632	795	—	600	400	SB[6]
Mercury (ppm) total	3.5	5,3	—	270	14	0.1
Zinc (ppm)	1505	1750	—	1500	1500	20

[1] NJ Department of Environmental Protection. Non-residential soil, direct contact. J.J.A.C. 7:26D, revised 7/11/96.
[2] NJ Department of Environmental Protection. Residential soil, direct contact. J.J.A.C. 7:26D, revised 7/11/96.
[3] NY Department of Environmental Conservation. Recommended soil cleanup objectives. HWR-94-046 (Revised). January 24, 1994.
[4] See Reference 12.
[5] n/a = not available.
[6] SB = Site background.

Table 5. Results of Physical Testing of Solidification/Stabilization Products*

	Metcalf & Eddy Treated Sediment		U.S. ACE-WES Screened As-Dredged Sediment		
	15% Cement Mix	30% Cement Mix	10% Cement Mix	20% Cement Mix	40% Cement Mix
USC in psi	217	614	29	128	492
Water Content at 60°C	53.0	26.9	60.7	27.7	18.1
Water Content at 100°C	71.6	53.7	70.3	5.4	32.1
Specific Gravity	2.70	2.69	2.53	2.61	2.63
Coefficient of Permeability-cm/sec	1.16E-06	4.15E-07	1.42E-05	5.46E-06	3.12E-07
Dry Densisty in lbs/ft^3	51.6	64.1	38.1	47.5	57.5
Atterburg Limits					
Liquid	103	—	126	—	—
Plastic	59	—	67	—	—
Slope Angle Degrees	—	—	35.5	—	—

* All analytical data are based upon the average of all sample test results provided by U.S. ACE-WES.

of dredged material. The results for contaminant reduction are shown in Table 6. There is essentially complete destruction of organic compounds. The metals are reduced by dilution and by loss to the gaseous sidestream. Moreover, the metal values are in the range found for commercially available cements. Strength tests have been carried out and show that the sediment-derived product meets compressive strength standards. Cement production is therefore a method that is successful in reducing the contamination levels and provides an end product suitable for beneficial reuse.

Westinghouse

The Westinghouse Science and Technology Center demonstrated the use of a plasma torch for destruction of organic contaminants and immobilization of metals in a glassy matrix. The plasma torch is an effective method for heating sediments to temperatures higher than can be achieved in a rotary kiln. On the other hand, feeding of the material into the plasma region is more complex since dewatering is necessary, and residence times in the high temperature regions are difficult to adjust. A schematic diagram of the Westinghouse apparatus is shown in Figure 4. The results for contaminant reduction are given in Table 7. The end goal of the processing is not only to reduce contaminant concentrations, but, also to produce a useful final product. In order to do this, the overall composition of the treated material is optimized for glass production. Glass tiles and fiber glass materials were successfully produced during the pilot-scale test work. Glass production can, therefore, be considered as successful in reduction of contaminant levels and production of a valuable end product.

5. Operational-Scale Program

As mandated under WRDA 1996, the end goal of the testing program is to produce one or more production-level demonstration facilities that can used as part of the total solution for management of dredged material from the harbor. Detailed engineering designs of plants for the production of cement and glass are now in progress and will be completed in early 1998. Construction of the facilities may begin in 1998 with a prospective completion date prior to the next century. This schedule is dependent on availability of funding from the private sector. Demonstrations of the sediment-washing approach are planned for early 1998 and operation of a large-scale demonstration facility by the end of 1998.

Conclusions

A short description has been given of the highlights of a unique federal program for dredged material demonstrating decontamination. This program began with tests at the bench-scale level and will progress to a goal of production-scale volumes of up to 375,000 m^3 utilizing a "treatment train" approach. The breadth of the program has been increased through cooperation with groups who have carried on self-funded test programs. The bench- and pilot-scale results described here demonstrate that decontamination may be a viable method for

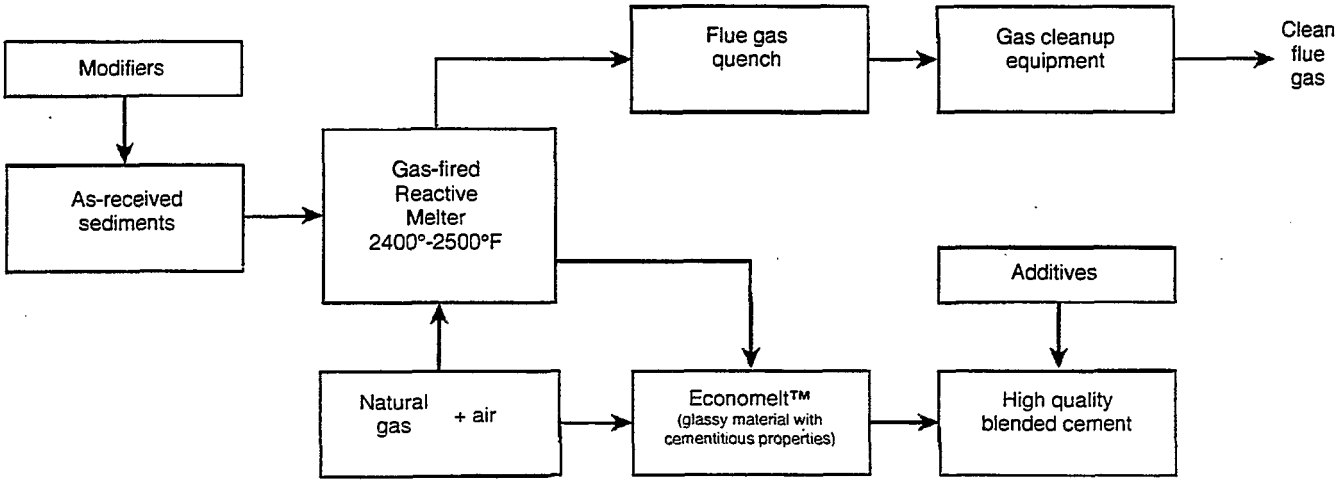

Figure 3. Schematic diagram showing the Institute of Gas Technology system for production of blended cement from dredged material.

Table 6. Summary of Results for the Institute of Gas Technology Cement Process

Contaminant	As-dredged	Treated	Percent Reduction	NJ Non-Resid.[1]	NJ Resid.[2]	NY Resid.[3]
2,3,7,8 TCDD (ppt)	23	0.35	98.47	—	—	—
O CDD (ppt)	11879	3.7	99.97	—	—	—
TCDD/TCDF TEQ (ppt)	513.2	1.406	99.72	—	—	—
Total PCBs (ppm)[4]	8.6	0.31	96.39	2	0.49	1
Anthracene (ppb)	18735	0	100	10,000	10,000	50,000
Benzo(a)anthracene (ppb)	17155	0	100	4000	900	224
Chrysene (ppb)	16878	0	100	40,000	9000	400
Total PAHs (ppb)[4]	293,854	0.16	100	—	n/a[5]	396,500
Arsenic (ppm)	39	1.52	96.10	20	20	7.5
Cadmium (ppm)	27	0.66	97.55	100	1	1
Chromium (ppm)	298	632.5	212	—	—	10
Copper (ppm)	1012	306	69.76	600	600	25
Lead (ppm)	542	29.4	94.57	600	400	SB[6]
Mercury (ppm) total	2.8	0.092	96.71	270	14	0.1
Zinc (ppm)	1535	280	81.76	1500	1500	20

[1] NJ Department of Environmental Protection. Non-residential soil, direct contact. J.J.A.C. 7:26D, revised 7/11/96.
[2] NJ Department of Environmental Protection. Residential soil, direct contact. J.J.A.C. 7:26D, revised 7/11/96.
[3] NY Department of Environmental Conservation. Recommended soil cleanup objectives. HWR-94-046 (Revised). January 24, 1994.
[4] See Reference 12.
[5] n/a = not available.
[6] SB = Site background.

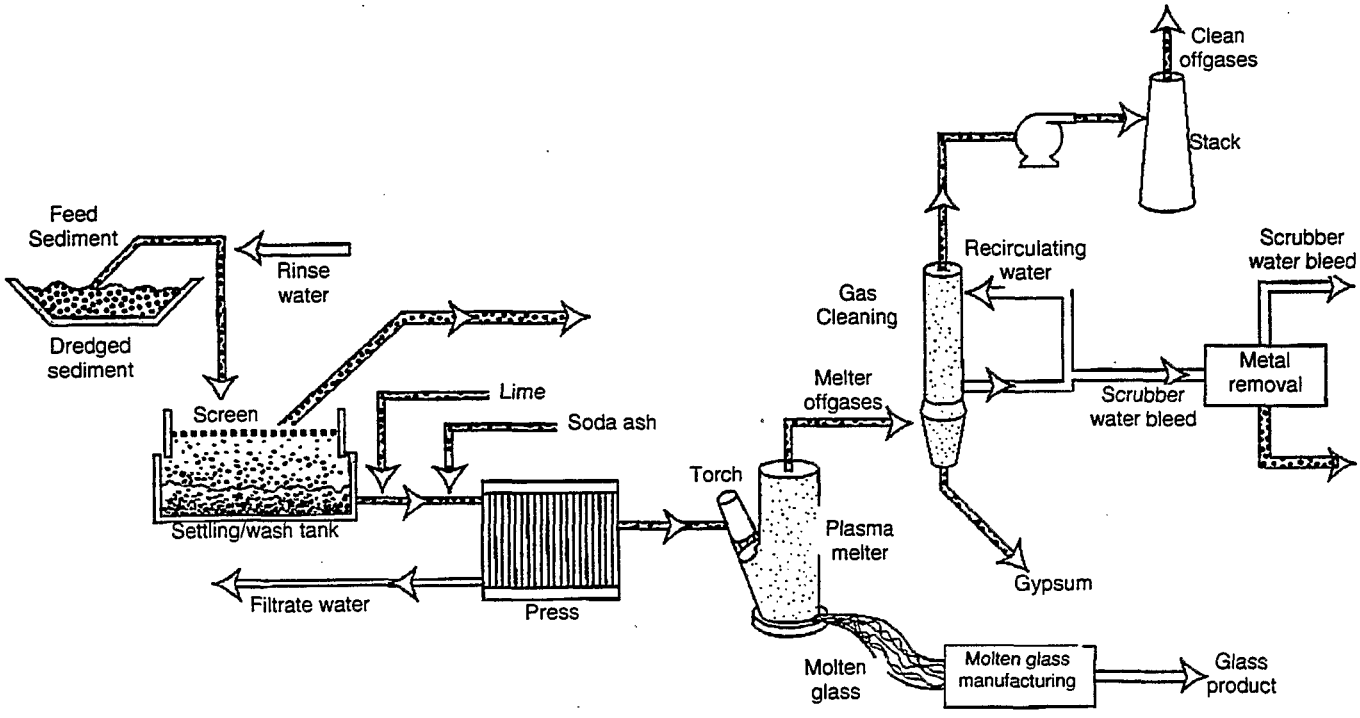

Figure 4. Schematic diagram showing the production of glass from dredged material using the Westinghouse Science and Technology Center plasma torch melter.

Table 7. Summary of Results for the Westinghouse Vitrification Process

Contaminant	As-dredged	Treated	Percent Reduction	NJ Non-Resid.[1]	NJ Resid.[2]	NY Resid.[3]
2,3,7,8 TCDD (ppt)	19.0	—	100	—	—	—
O CDD (ppt)	9655	8.0	100	—	—	—
TCDD/TCDF TEQ (ppt)	335	0.07	100	—	—	—
Total PCBs (ppm)[4]	0.900	0	100	2	0.49	1
Anthracene (ppb)	7.72	0	100	10,000	10,000	50,000
Benzo(a)anthracene (ppb)	7.19	0	100	4000	900	224
Chrysene (ppm)	8.76	0	100	40,000	9000	400
Total PAHs (ppb)[4]	109	0	100	—	n/a[5]	396,500
Arsenic (ppm)	15.8	4.94	68.7	20	20	7.5
Cadmium (ppm)	33.3	0.948	97.1	100	1	1
Chromium (ppm)	344	1001	—	—	—	10
Copper (ppm)	1145	1077	5.9	600	600	25
Lead (ppm)	594	105	82.3	600	400	SB[6]
Mercury (ppm)	2.08	0.087	95.8	270	14	0.1
Zinc (ppm)	1695	1240	26.8	1500	1500	20

[1] NJ Department of Environmental Protection. Non-residential soil, direct contact. J.J.A.C. 7:26D, revised 7/11/96.
[2] NJ Department of Environmental Protection. Residential soil, direct contact. J.J.A.C. 7:26D, revised 7/11/96.
[3] NY Department of Environmental Conservation. Recommended soil cleanup objectives. HWR-94-046 (Revised). January 24, 1994.
[4] See Reference 12.
[5] n/a = not available.
[6] SB = Site background.

handling at least a portion of the contaminated dredged material from NY/NJ Harbor.

Acknowledgments

Work at Brookhaven National Laboratory was supported in part by the U.S. Department of Energy under Contract No. DE-AC02-76CH00016 and by Interagency Agreements between the U.S. Environmental Protection Agency (Nos. DW89941761-01-0 and DW89937890-01-0), the U.S. Army Corps of Engineers (No. NYD-94-39), and the U.S. Department of Energy.

References

1. U.S. Army Corps of Engineers, New York District. September 1996. *Dredged Material Management Plan for the Port of New York and New Jersey. Interim Report.*

2. Stern, E. A., Donato, K., Jones, K. W., and Clesceri, N. L. "Processing contaminated dredged material from the Port of New York/New Jersey." Presented at the *Estuarine and Coastal Sciences Association (ECSA) Estuarine Research Federation (ERF) 96 Symposium,* Middelburg, The Netherlands, 16-20 September 1996. Estuaries. In press.

3. Jones, K. W., Stern, E. A., Donato, K., and Clesceri, N. L. "Processing of NY/NJ Harbor estuarine dredged material. Dredging and Management of Dredged Material," *Proceedings of 3 Sessions Held in Conjunction with the Geo-Logan 97 Conference,* The Geo-Institute/ASCE, July 16-17, 1997, Logan, UT. pp. 49-66.

4. Jones, K. W., Stern, E. A., Donato, K. R., and Clesceri, N. L. Commercialization of dredged-material decontamination technologies. *Remediation. 8* (2) 43-54 (1998).

5. C. R. Lee, U.S. Army Corps of Engineers, Waterways Experiment Station, Attention: CEWES-ES-F, Environmental Processes and Effects Division, 3909 Halls Ferry Road, Vicksburg, MS 39180-6199.

6. Mohsen Amiran, BioGenesis Enterprises Inc., 610 West Rawson Avenue, Oak Creek, WI 53154.

7. John Cardoni, Metcalf & Eddy, Inc., Post Office Box 1500, Somerville, NJ 008876-1251.

8. Amir G. Rehmat, Institute of Gas Technology, 1700 South Mount Prospect Road, Des Plaines, IL 60018-1804.

9. Nancy H. Ulerich, Westinghouse Electric Corporation, Science & Technology Center, 1310 Beulah Road, Pittsburgh, PA 15235-5098.

10. Tanal, Vahan; Wang, Jaw-nan; Samtani, Naresh C.; and Lancellotti, Anthony. "Lime stabilization and disposal of contaminated dredged harbor sediments." *Proceedings of Geoenvironment 2000,* New Orleans, LA, February 1995.

11. Samtani, Naresh C.; Tanal, Vahan; Wang, Joe; and Lanclelotti, Anthony R. "Effect of lime admixtures on contaminated dredged sediments." *Proceedings of First International Congress on Environmental Geotechnics,* Edmonton, Alberta, Canada, July 10-15, 1994.

12. NOAA. 1996. *Contaminant Levels in Muscle and Hepatic Tissue of Lobster from the New York Bight Apex.* Report to the U.S. Environmental Protection Agency and the U.S. Army Corps of Engineers. National Oceanic and Atmospheric Administration, National Marine Fisheries Service, James J. Howard Marine Science Laboratory, Highlands, NJ. May 1996.