Table of Contents

	Page
1.0 Project Introduction	1
1.1 Project Background	1
1.2 Project Organization	2
2.0 Project Description and Objectives	3
2.1 Project Description	3
2.2 Project Objectives	4
3.0 Project Discussion and Results	4
3.1 Pre-Kiln Processing (Solid-Liquid Separation/Dewatering)	4
3.1.1 Dredged Material Condition and Project Mobilization	4
3.1.2 Commissioning Trials – Dredged Material Dewatering System	5
3.1.3 Commissioning Trials – Initial Chemical Analysis	6
3.1.4 Commissioning Trials – Continuing Actions	6
3.1.5 Lightweight Aggregate Processing Facility Issues	7
3.1.6 Dredged Material Dewatering Processing Issues	8
3.1.6.1 Physical Handling Issues	8
3.1.6.2 Debris Removal Issues	8
3.1.7 Phase 1 Laboratory Study at FFE Minerals (Fuller Company)	9
3.2 Rotary Kiln Processing	10
3.2.1 Pilot Hammermill Dryer/Grinder System	11
3.2.2 Pilot Extruder System	12
3.2.3 Pilot Rotary Kiln System	12
4.0 Analytical Testing Discussion and Results	14
4.1 Analytical Testing Discussion – Pre-Kiln Processing (Dewatering)	14
4.2 Analytical Results – Pre-Kiln Processing	15
4.2.1 As-Dredged Sediment Results	15
4.2.2 Dewatering Effluent Results	16
4.2.3 Toxicity Results – Dewatering Effluent Liquid	17
4.2.4 Dewatered Filter Cake Results	17
4.3 Data Validation Assessment – Pre-Kiln Processing	18
4.4 Analytical Testing Discussion – Rotary Kiln Emission Measurements	18
4.5 Analytical Testing Discussion – Lightweight Aggregate Product	19
4.6 Analytical Results – Rotary Kiln Processing Emissions and Process Samples	19
4.6.1 Emission Results	21
4.6.2 Process Sample Results	23
4.6.2.1 Shale	24
4.6.2.2 Feed Pellets	24
4.6.2.3 Aggregate Product	25
4.6.2.4 Ceramic Filter Catch	25
4.6.2.5 Scrubber Make-up Water	27
4.6.2.6 Scrubber Liquor	27
4.6.2.7 Fuel Oil	27

4.7 Lightweight Aggregate Product Physical and Geotechnical Testing Results 27
4.7.1 Physical Results 27
4.7.2 Geotechnical Results 28
4.8 Other Lightweight Aggregate Product Evaluation Results 29
4.8.1 Port Authority of NY & NJ 29
4.8.2 New York State Department of Transportation 29
4.8.3 New Jersey Department of Transportation 30
4.9 Data Validation Assessment – Rotary Kiln Processing 30
4.10 Fate Assessment Projection Requirement – Mercury and PCBs 31
4.10.1 Fate Assessment – Mercury 31
4.10.2 Fate Assessment – PCBs 34

5.0 Economic Analysis 35

6.0 Commercial Scale Operations 38
6.1 Commercial Scale Pre-Kiln Processing (Dewatering) Facility 38
6.2 Commercial Scale Lightweight Aggregate Processing Facility 39

7.0 Conclusions and Recommendations 41

Figures

Tables

Appendices

Appendix 1 – NJIT Data Validation Assessments
Appendix 2 – JCI/UPCYCLE Associates, LLC - Pilot Program Work Plan
Appendix 3 – GZA GeoEnvironmental, Inc - Sampling and Analysis Plan and Report
Appendix 4 – Aqua Science, Inc. - Effluent Liquid Toxicity Report
Appendix 5 – Operations Services Corporation - Dewatering Project Report
Appendix 6 – Lewis Corporation - Briquette Press Manufacturer's Trip Report
Appendix 7 – FFE Minerals USA Inc. - Final Project Report (Discussion and Results Section)
Appendix 8 – Fuller Air Compliance - Final Project Report (Introduction/Plant and Sampling Location Descriptions/Summary and Discussion of Test Results Sections)
Appendix 9 – Lightweight Aggregate Testing and Evaluation Reports
a. STS Consultants, Ltd.
b. Port Authority of NY/NJ
c. New York State Department of Transportation
d. New Jersey Department of Transportation

Reference Documents

1. "Sediment Decontamination Pilot Project - Interim Summary Report" prepared by JCI/UPCYCLE Associates, LLC (December 2000)

2. "Draft Final Summary Report – Sediment Decontamination and Beneficial Use Pilot Project" prepared by JCI/UPCYCLE Associates, LLC (August 2001)

3. "Comment and Response Document to the Draft Final Summary Report – Sediment Decontamination and Beneficial Use Pilot Project" prepared by JCI/UPCYCLE Associates, LLC (March 2002)

4. "Pilot Production of Lightweight Aggregate from Dredged Material – Final Report" prepared by FFE Minerals USA, Inc. (June 2001)

5. "Report for Air Emissions Testing and Process Material Sampling of Thermal Processing of Dredged Materials, prepared by Fuller Air Compliance (June 2001)

List of Figures

Figure 1 Process Flow Diagram – Pre-Kiln/Dewatering Phase
Figure 2 Process Flow Diagram – Kiln Processing Phase
Figure 3A Composition Diagram
Figure 3 Pilot Hammermill Dryer Circuit Schematic
Figure 4 Pilot Rotary Kiln System Schematic
Figure 5 SOR Testing Laboratories, Inc. Report
Figure 6 Projected Total Cost Estimate
Figure 7 Preliminary Process Flow Diagram – Commercial Dewatering Facility
Figure 8 Preliminary Process Flow Diagram – Commercial LWA Facility

List of Tables

Table A Comparison of Overall Removal Between As-Dredged Sediment and LWA Product
Table 1 As-Dredged Sediment Soils Testing and Miscellaneous Results
Table 1A As-Dredged Sediment Chemical Data Summary - Metals
Table 1B As-Dredged Sediment Chemical Data Summary - Trace Level Organic Compounds
Table 1C As-Dredged Sediment Chemical Data Summary - Pesticides, PCBs and Herbicides
Table 1D As-Dredged Sediment Chemical Data Summary - GC/MS Volatiles and Semivolatiles
Table 2 Dewatering Liquid Analytical Results
Table 2A Dewatering Liquid Chemical Data Summary - Trace Level Organic Compounds
Table 3 Toxicity Results Dewatering Effluent Liquid - ASI Biomonitoring Report
Table 3A Toxicity Results Dewatering Effluent Liquid - ASI Summary of Acute Test Results
Table 4 Dewatered Filter Cake Soils Testing and Miscellaneous Results
Table 4A Dewatered Filter Cake Chemical Data Summary – Metals and TCLP Metals
Table 4B Dewatered Filter Cake Chemical Data Summary – Trace Level Organic Compounds
Table 4C Dewatered Filter Cake Chemical Data Summary - Pesticides, PCBs and Herbicides
Table 4D Dewatered Filter Cake Chemical Data Summary - GC/MS Semivolatiles
Table 5 Test Program Overview for Air Emissions Sampling
Table 6 Test Program Overview for Process Materials Sampling
Table 7 Test Program Overview LWA Product Physical Analysis
Table 8 Test Program Overview LWA Product Geotechnical Analysis
Table 9 Overall Summary of Air Emissions Results
Table 10 Shale Sample Results
Table 11 Comparison of Shale Sample Results
Table 12 Feed Pellet Samples Metals/Halogens/PCDD/PCDF Results
Table 12A Chemical (Oxide) Analyses – Dredged Material Filter Cake and Shale
Table 13 Comparison of Feed Pellet Samples Metals Concentrations
Table 14 Aggregate Product Samples Metals/Halogens/PCDD/PCDF Results
Table 15 Comparison of Aggregate Product Samples Metals Concentrations
Table 15A Comparison of Aggregate Product vs. As-Dredged Material Metals Concentrations
Table 16 Comparison of Aggregate Product Samples PCDD/PCDF Results
Table 17 Comparison of Aggregate Product Samples TCLP Metals Results
Table 18 Summary of Aggregate Product Samples MEP Metals Results
Table 19 Ceramic Filter Catch Samples Metals/TOC/PCDD/PCDF Results
Table 20 Comparison of Aggregate Product and Ceramic Filter Catch Samples Metals Results
Table 21 Comparison of Aggregate Product and Ceramic Filter Catch Samples PCDD/PCDF Results

Table 22 Ceramic Filter Catch Samples VOC Results
Table 23 Comparison of Ceramic Filter Catch Samples TCLP Metals Results
Table 24 Scrubber Make-up Water Sample Results
Table 25 Scrubber Liquor Sample Results
Table 26 Comparison of LWA Products Compressive Strengths
Table 26A Comparison of LWA Products Absorptions
Table 27 Comparison of LWA Products Geotechnical Results
Table 28 Fate Assessment Evaluation – Mercury
Table 29 Fate Assessment Evaluation – PCBs and Halogens
Table 30 Dredge-to-LWA Process – Emission Comparison

FINAL SUMMARY REPORT

SEDIMENT DECONTAMINATION AND BENEFICIAL USE PILOT PROJECT

Prepared for:

NEW JERSEY DEPARTMENT OF TRANSPORTATION
OFFICE OF MARITIME RESOURCES
PROJECT AO # 9350203

and

UNITED STATES ENVIRONMENTAL PROTECTION AGENCY – REGION 2
through
BROOKHAVEN NATIONAL LABORATORY
CONTRACT NUMBER 48172

Prepared by:

JCI/UPCYCLE Associates, LLC

May 2002

FINAL SUMMARY REPORT

SEDIMENT DECONTAMINATION AND BENEFICIAL USE PILOT PROJECT

Prepared for:

NEW JERSEY DEPARTMENT OF TRANSPORTATION
OFFICE OF MARITIME RESOURCES
PROJECT AO # 9350203

and

UNITED STATES ENVIRONMENTAL PROTECTION AGENCY – REGION 2
through
BROOKHAVEN NATIONAL LABORATORY
CONTRACT NUMBER 48172

Prepared by:

JCI/UPCYCLE Associates, LLC

May 2002

Executive Summary

The need to achieve environmentally acceptable and economically feasible options for the management of dredged material is necessary in order to retain and enhance the viability of America's waterways, ports and harbors. In recent times, the ability to dispose of dredged material in various open water options has been significantly curtailed due to concerns surrounding the potential impacts of contaminates in the dredged material on the environment.

The Port of New York and New Jersey serves as a prime example of this problem. The worldwide trend for shipping is for increased containerization in larger vessels requiring not only maintenance of the current channel depths, but more importantly, deepening of them. Due to the concern over contamination of the sediment from years of industrial activity in the Port coupled with discharges from municipal, storm sewer sources, marina and boating operations, and atmospheric deposition, the criteria for ocean disposal of dredged material were revised and made much more stringent. The result of these revisions is the lack of environmentally acceptable and cost-effective reliable options for disposing of the millions of cubic yards of material that must be removed to both maintain current water depth and provide the additional depth needed for this next generation of container ships.

In March 1998, the State of New Jersey under RFP/Bid No. 98-X-9999 requested contractors to provide proposals that would demonstrate innovative strategies for the management of dredged materials from the NY/NJ Harbor. This RFP sought reliable technologies for decontaminating dredged materials coincident with the beneficial use of the decontaminated sediment by producing marketable end products at a commercial scale of 500,000 cubic yards per year of dredged material. The scope of the RFP defined the two principal components of the Sediment Decontamination Project. The first component being a Pilot Study encompassing the processing and treatment of approximately 200 gallons of sediment and based upon the success of the Pilot Study, a subsequent larger scale Demonstration Project utilizing between 30,000 to 150,000 cubic yards of dredged material.

JCI/UPCYCLE Associates, LLC was selected to demonstrate its technology for the production of lightweight aggregate from dredged material and commenced a Pilot Project in July 2000 under Contract Number AO #9350203 issued and funded by the New Jersey Department of Transportation, Office of Maritime Resources. The Pilot Project consisted of two distinct phases, the pre-kiln or dewatering phase and the rotary kiln processing phase. The dewatering phase was conducted at Stratus Petroleum in Newark, NJ and was completed in early September 2000. The rotary kiln processing phase was conducted at the R&D facility of FFE Minerals in Catasauqua, PA and conducted in March 2001 with final results received in June 2001. USEPA under its WRDA authority and contracting agreement with Brookhaven National Laboratory, Contract Number 48172, funded a comprehensive Environmental Testing and Characterization Program attendant with the rotary kiln processing phase of the Pilot Project.

The main objectives of the pilot work were: (1) to demonstrate that dredged material could be used as a feedstock and converted into quality lightweight aggregate; (2) to demonstrate that the resulting lightweight aggregate produced from dredged material met environmental criteria for decontamination; and (3) to demonstrate the adequacy of the equipment used in the process and to quantify data needed for commercial facility design and operation.

Approximately 4 cubic yards of dewatered dredged material filter cake from the Stratus Petroleum site produced during the pre-kiln phase of the pilot program was subjected to the rotary kiln processing phase. The pre-kiln steps included initial sizing, debris removal, and dewatering via a proprietary solids/liquid separation technology. This phase also included a complete analytical testing program for the as-dredged sediment, dewatered dredged material filter cake and effluent dewatering liquid. The rotary kiln processing phase included the hammermill drying and grinding of the dewatered dredged material filter cake, the pug milling, and extrusion and kiln manufacture of the extruded pellets into lightweight aggregate. As part of this phase, an emissions testing program and full characterization (both chemical and physical) of the lightweight aggregate produced from the extruded dredged material feed pellets was performed. Additionally, comprehensive geotechnical evaluation and testing of the lightweight aggregate produced was completed.

The results obtained from the Pilot Project successfully demonstrated the technical viability of the process to produce a quality, marketable lightweight aggregate from dredged material satisfying ASTM applicable requirements. The use of an extruded pellet feed mix of 70% dredged material/30% raw shale without the need for a bloating enhancing agent, yielded a pellet with acceptable green strength for kiln processing. From a potential contaminant and environmental assessment of the process, sediment decontamination occurred. Analytical results for the LWA product produced during the Pilot Project were below detection limits for herbicides, pesticides, PCB aroclors, VOCs and TCLP volatiles, and SVOCs and TCLP semivolatiles. TCLP metals analyses for those metals with established regulatory limits were all below the established limits. FFE Minerals testing confirmed JCI/UPCYCLE's assessment on the technical feasibility of the process and concluded that "this process could be commercialized from a process and aggregate quality standpoint." Additionally, the Port Authority of NY/NJ in their evaluation of the LWA product concluded that it "exhibited physical properties desired for a construction grade lightweight aggregate and that from an exposure standpoint, the LWA product may be viewed as non-toxic."

A Draft Final Report Summary was issued for review in August 2001 with written comments received in January and February 2002. To respond to these comments, a Comment and Response Document was prepared and submitted to the reviewers in March 2002 addressing the technical issues raised resulting from the Pilot Project. The responses contained in the Comment and Response Document are incorporated herein. Comments and questions relating to the economic analysis of the process raised during the review of the Draft Final Summary Report not addressed in the Comment and Response Document are also addressed herein.

The ability to successfully perform large-scale solid/liquid separation and dewatering of the as-dredged sediment via the technology employed was demonstrated. The pilot information provided baseline data and scale-up information and confirmed the bench-scale laboratory assessment. The optimization of the solids concentration of the feed slurry to the dewatering system is key in achieving the requisite filter cake quality. At commercial operation, polymer dosing will be stable and contribute to steady-state operation. Overall, the pilot operating results suggested no scale-up problems at the primary dewatering, secondary dewatering or conveyance steps of the process.

The ability to off-load the as-dredged material to the dewatering system via pumping in an enclosed system was also demonstrated. Collected pressate water and wash water from the primary and secondary dewatering steps can be used as dilution water for the as-dredged sediment to create a readily pumpable slurry feed for the dewatering system.

The extreme plastic nature and rheology of the dredged material precluded the ability of the mechanically dewatered filter cake to be a suitable feed for the briquette press. The "briquetting" concept was included in the pilot evaluation as a potential material handling enhancement and not as a process necessity. Given the later use of the hammermill dryer system to provide material homogeneity prior to pellet extrusion, the elimination of the briquetting step does not have any deleterious effect on the overall process or technology.

The preponderance of analytical results were as expected with many analytes being at or below method detection limits. While being higher than anticipated, the mercury levels found in the as-dredged sediment (4.6 to 5.2 mg/kg) were consistent with mercury levels found in other port sediments. Trace quantities of organic compounds were also detected.

The analytical results for the collected dewatering liquid exceeded NJ Surface Water Quality Standards for arsenic, manganese and mercury with minute quantities of organic compounds also detected. Toxicity results on the effluent dewatering liquid confirmed that the effluent liquid was not toxic based on the 48-hour acute screening tests.

A complete battery of analytic testing was performed on the dewatered filter cake solids and in general, these results were similar to the results for the as-dredged material. TCLP metals analyses were done on the filter cake with no contravention or exceedance of established limits.

The Phase 1 Laboratory Study suggested the optimal feed mix based on an evaluation of technical, operational and economic factors. The proposed mix design of 70% dredged material/30% raw shale without an organic bloating agent enhancer produced feed pellets with acceptable green strength suitable for thermal processing within the kiln. Further, the study concluded that acceptable LWA could be made from feedstock containing varying ratios of dredged material to raw shale. On a commercial scale, as-dredged material quality and composition will dictate the need for the addition of a bloating agent, while market and economic factors in conjunction with end-use requirements will dictate acceptable LWA product specifications and therefore, the final mix design.

The heated air-swept hammermill dryer/grinder system was effective for both moisture removal and sizing of the dredged material filter cake and providing a homogenous feed mixture. The recycling of dried dredged material filter cake eliminated sticking and plugging problems within the hammermill and is proposed for the commercial operation. Further, the use of waste heat from the kiln and its afterburner circuit to heat the hammermill will not contribute to final NOx emissions from the overall rotary kiln process.

The air pollution control system attached to the pilot rotary kiln was effective at reducing pollutant emissions to atmosphere. This system, comprised of a high temperature afterburner, ceramic particulate collector and recirculating caustic scrubber, provided generally greater than 90% reductions in pollutant emissions when measured between the exit of the kiln and the exhaust of the recirculating scrubber. The exceptions to this reduction achievement were in NOx, VOC and mercury emission levels. On a commercial scale, emission levels of these pollutants are expected to be comparable to or lower than emission levels from conventional LWA kiln systems given the lower specific fuel consumption when using dredged material as the feedstock coupled with better performance of specifically designed and sized full scale air pollution control equipment.

From contaminant and environmental assessment viewpoints, sediment decontamination occurred. Analytical results for the LWA produced from the dredged material were below detection limits for herbicides, pesticides, PCB aroclors, VOCs and TCLP volatiles, and SVOC and TCLP semivolatiles. TCLP metals analyses for those metals with established regulatory limits were all below the established limits. In the case of mercury, analytical results ranged from below analytical detection to 0.034 to 0.054 mg/kg. Given an inability to fully characterize and quantify the fate of mercury from all processing steps, it is proposed that a more rigorous sampling and analysis program be developed in conjunction with NJDEP and EPA/BNL personnel and that this program be implemented during the Demonstration Project.

The analytical testing results from both phases of the Pilot Project were subjected to independent data validation conducted by the New Jersey Institute of Technology's Center for Environmental Engineering and Science ("NJIT"). In their summary evaluations, the NJIT reviewers found the data to have been generated in an acceptable manner. In addition to the data, the Laboratory Case Narratives and Internal Data were also reviewed and evaluated. The NJIT independent validations were in general concurrence with the Laboratory Case Narratives and Internal Data based on the selection of methods, the quality control/quality assurance protocols and the general professional practices that were employed.

From a product quality assessment viewpoint, the LWA product met all applicable ASTM standards (ASTM C330) with one minor exception, the specification for gradation. The failure of the aggregate to meet ASTM specifications was a function of how the aggregate sample was prepared by FFE Minerals. A properly specified and designed commercial cone crusher will ensure compliance with the ASTM gradation specifications. Additionally, crushing strengths for the LWA produced exceeded many commercial lightweight aggregates currently available. The moisture absorption levels, approximately 10.5%, were also below the generally accepted maximum range of 15-20%.

Utilizing the results from the Pilot Project, an estimate of commercial processing cost has been made assuming a minimum of 500,000 cu yd (in-situ) throughput per year. The estimate is based on the development and operation of a dewatering facility located proximate to the NY/NJ Harbor with subsequent transportation of the dewatered filter cake to an existing LWA plant outside of the region but readily accessible via rail and/or truck. Using the Pilot Study data, the total estimated cost is $42.32/cu yd (in-situ). The estimate includes both fixed and operating cost components with the fixed cost component providing for a 10-acre land-based solids/liquid separation, dewatering and storage facility. Operational costs include material characterization, material handling, dewatering, and transportation expenses as well as kiln related handling and processing costs.

The cost estimate is predicated on the receipt of this minimum 500,000 cu yd quantity annually. This minimum quantity is in turn used to size equipment and determine facility requirements, define efficient operating scenarios and resource allocations, and to insure on-going product quality. The requisite investments and economies of scale mandated to make the technology economical viable can only be achieved through dedicated and continuing sourcing mechanisms.

It is important to note that the LWA manufacturing plant and more directly, the rotary kiln(s) need to function and produce on a "24/7" schedule at steady-state conditions. Frequent starts and stops of the kiln are inherently detrimental to this type of equipment due to the tremendous thermal stresses placed on the kiln shell and the refractory lining that result from the cooling and

heating cycles. Operating at steady-state conditions with a minimum of process parameter variations is the best way to maximize dredged material usage and LWA product quality.

The inability to provide a continuous supply of dredged material may also be reflected in subtle differences in the LWA produced. While the aggregate will meet the applicable ASTM standards, frequent changes in the mix design ratio of the feed may cause some color variation in the LWA product and subsequently in the end use that may not be acceptable to the LWA specifier or owner.

This pilot test has provided a great deal of baseline technical process information and results that are readily applicable to full-scale commercial operation. The economic projections for commercial scale remain reliant on the supply assumptions and coincident steady-state operating scenario outlined above as well as the benefits to be realized from economies of scale and require confirmation that can be obtained from undertaking a larger-scale Demonstration Project.

It is recommended that a Demonstration Sediment Decontamination and Beneficial Use Project be conducted using a substantial quantity of dredged material (30000+ cubic yards). The pre-kiln dewatering phase will be performed at a site proximate to the dredging location in the NY/NJ Harbor region. The kiln processing phase will be performed at an existing, operating lightweight aggregate facility. The Demonstration Project will include an effort to more adequately and fully characterize and quantify the fate of mercury and PCBs from the process. The LWA produced during the Demonstration Project will be used in an actual application or applications and therefore provide "real world" results to evaluate LWA produced from dredged material. The undertaking and completion of a Demonstration Project will allow the confirmation of pilot study data, provide an opportunity to optimize operating parameters, finalize commercial plant modifications and layout requirements, and most importantly, offer the opportunity to refine operating costs.

Table of Contents

	Page
1.0 Project Introduction	1
1.1 Project Background	1
1.2 Project Organization	2
2.0 Project Description and Objectives	3
2.1 Project Description	3
2.2 Project Objectives	4
3.0 Project Discussion and Results	4
3.1 Pre-Kiln Processing (Solid-Liquid Separation/Dewatering)	4
3.1.1 Dredged Material Condition and Project Mobilization	4
3.1.2 Commissioning Trials – Dredged Material Dewatering System	5
3.1.3 Commissioning Trials – Initial Chemical Analysis	6
3.1.4 Commissioning Trials – Continuing Actions	6
3.1.5 Lightweight Aggregate Processing Facility Issues	7
3.1.6 Dredged Material Dewatering Processing Issues	8
3.1.6.1 Physical Handling Issues	8
3.1.6.2 Debris Removal Issues	8
3.1.7 Phase 1 Laboratory Study at FFE Minerals (Fuller Company)	9
3.2 Rotary Kiln Processing	10
3.2.1 Pilot Hammermill Dryer/Grinder System	11
3.2.2 Pilot Extruder System	12
3.2.3 Pilot Rotary Kiln System	12
4.0 Analytical Testing Discussion and Results	14
4.1 Analytical Testing Discussion – Pre-Kiln Processing (Dewatering)	14
4.2 Analytical Results – Pre-Kiln Processing	15
4.2.1 As-Dredged Sediment Results	15
4.2.2 Dewatering Effluent Results	16
4.2.3 Toxicity Results – Dewatering Effluent Liquid	17
4.2.4 Dewatered Filter Cake Results	17
4.3 Data Validation Assessment – Pre-Kiln Processing	18
4.4 Analytical Testing Discussion – Rotary Kiln Emission Measurements	18
4.5 Analytical Testing Discussion – Lightweight Aggregate Product	19
4.6 Analytical Results – Rotary Kiln Processing Emissions and Process Samples	19
4.6.1 Emission Results	21
4.6.2 Process Sample Results	23
4.6.2.1 Shale	24
4.6.2.2 Feed Pellets	24
4.6.2.3 Aggregate Product	25
4.6.2.4 Ceramic Filter Catch	25
4.6.2.5 Scrubber Make-up Water	27
4.6.2.6 Scrubber Liquor	27
4.6.2.7 Fuel Oil	27

4.7 Lightweight Aggregate Product Physical and Geotechnical Testing Results 27
4.7.1 Physical Results 27
4.7.2 Geotechnical Results 28
4.8 Other Lightweight Aggregate Product Evaluation Results 29
4.8.1 Port Authority of NY & NJ 29
4.8.2 New York State Department of Transportation 29
4.8.3 New Jersey Department of Transportation 30
4.9 Data Validation Assessment – Rotary Kiln Processing 30
4.10 Fate Assessment Projection Requirement – Mercury and PCBs 31
4.10.1 Fate Assessment – Mercury 31
4.10.2 Fate Assessment – PCBs 34

5.0 Economic Analysis 35

6.0 Commercial Scale Operations 38
6.1 Commercial Scale Pre-Kiln Processing (Dewatering) Facility 38
6.2 Commercial Scale Lightweight Aggregate Processing Facility 39

7.0 Conclusions and Recommendations 41

Figures

Tables

Appendices

Appendix 1 – NJIT Data Validation Assessments
Appendix 2 – JCI/UPCYCLE Associates, LLC - Pilot Program Work Plan
Appendix 3 – GZA GeoEnvironmental, Inc - Sampling and Analysis Plan and Report
Appendix 4 – Aqua Science, Inc. - Effluent Liquid Toxicity Report
Appendix 5 – Operations Services Corporation - Dewatering Project Report
Appendix 6 – Lewis Corporation - Briquette Press Manufacturer's Trip Report
Appendix 7 – FFE Minerals USA Inc. - Final Project Report (Discussion and Results Section)
Appendix 8 – Fuller Air Compliance - Final Project Report (Introduction/Plant and Sampling Location Descriptions/Summary and Discussion of Test Results Sections)
Appendix 9 – Lightweight Aggregate Testing and Evaluation Reports
a. STS Consultants, Ltd.
b. Port Authority of NY/NJ
c. New York State Department of Transportation
d. New Jersey Department of Transportation

Reference Documents

1. "Sediment Decontamination Pilot Project - Interim Summary Report" prepared by JCI/UPCYCLE Associates, LLC (December 2000)

2. "Draft Final Summary Report – Sediment Decontamination and Beneficial Use Pilot Project" prepared by JCI/UPCYCLE Associates, LLC (August 2001)

3. "Comment and Response Document to the Draft Final Summary Report – Sediment Decontamination and Beneficial Use Pilot Project" prepared by JCI/UPCYCLE Associates, LLC (March 2002)

4. "Pilot Production of Lightweight Aggregate from Dredged Material – Final Report" prepared by FFE Minerals USA, Inc. (June 2001)

5. "Report for Air Emissions Testing and Process Material Sampling of Thermal Processing of Dredged Materials, prepared by Fuller Air Compliance (June 2001)

List of Figures

Figure 1 Process Flow Diagram – Pre-Kiln/Dewatering Phase
Figure 2 Process Flow Diagram – Kiln Processing Phase
Figure 3A Composition Diagram
Figure 3 Pilot Hammermill Dryer Circuit Schematic
Figure 4 Pilot Rotary Kiln System Schematic
Figure 5 SOR Testing Laboratories, Inc. Report
Figure 6 Projected Total Cost Estimate
Figure 7 Preliminary Process Flow Diagram – Commercial Dewatering Facility
Figure 8 Preliminary Process Flow Diagram – Commercial LWA Facility

List of Tables

Table A Comparison of Overall Removal Between As-Dredged Sediment and LWA Product
Table 1 As-Dredged Sediment Soils Testing and Miscellaneous Results
Table 1A As-Dredged Sediment Chemical Data Summary - Metals
Table 1B As-Dredged Sediment Chemical Data Summary - Trace Level Organic Compounds
Table 1C As-Dredged Sediment Chemical Data Summary - Pesticides, PCBs and Herbicides
Table 1D As-Dredged Sediment Chemical Data Summary - GC/MS Volatiles and Semivolatiles
Table 2 Dewatering Liquid Analytical Results
Table 2A Dewatering Liquid Chemical Data Summary - Trace Level Organic Compounds
Table 3 Toxicity Results Dewatering Effluent Liquid - ASI Biomonitoring Report
Table 3A Toxicity Results Dewatering Effluent Liquid - ASI Summary of Acute Test Results
Table 4 Dewatered Filter Cake Soils Testing and Miscellaneous Results
Table 4A Dewatered Filter Cake Chemical Data Summary – Metals and TCLP Metals
Table 4B Dewatered Filter Cake Chemical Data Summary – Trace Level Organic Compounds
Table 4C Dewatered Filter Cake Chemical Data Summary - Pesticides, PCBs and Herbicides
Table 4D Dewatered Filter Cake Chemical Data Summary - GC/MS Semivolatiles
Table 5 Test Program Overview for Air Emissions Sampling
Table 6 Test Program Overview for Process Materials Sampling
Table 7 Test Program Overview LWA Product Physical Analysis
Table 8 Test Program Overview LWA Product Geotechnical Analysis
Table 9 Overall Summary of Air Emissions Results
Table 10 Shale Sample Results
Table 11 Comparison of Shale Sample Results
Table 12 Feed Pellet Samples Metals/Halogens/PCDD/PCDF Results
Table 12A Chemical (Oxide) Analyses – Dredged Material Filter Cake and Shale
Table 13 Comparison of Feed Pellet Samples Metals Concentrations
Table 14 Aggregate Product Samples Metals/Halogens/PCDD/PCDF Results
Table 15 Comparison of Aggregate Product Samples Metals Concentrations
Table 15A Comparison of Aggregate Product vs. As-Dredged Material Metals Concentrations
Table 16 Comparison of Aggregate Product Samples PCDD/PCDF Results
Table 17 Comparison of Aggregate Product Samples TCLP Metals Results
Table 18 Summary of Aggregate Product Samples MEP Metals Results
Table 19 Ceramic Filter Catch Samples Metals/TOC/PCDD/PCDF Results
Table 20 Comparison of Aggregate Product and Ceramic Filter Catch Samples Metals Results
Table 21 Comparison of Aggregate Product and Ceramic Filter Catch Samples PCDD/PCDF Results

Table 22 Ceramic Filter Catch Samples VOC Results
Table 23 Comparison of Ceramic Filter Catch Samples TCLP Metals Results
Table 24 Scrubber Make-up Water Sample Results
Table 25 Scrubber Liquor Sample Results
Table 26 Comparison of LWA Products Compressive Strengths
Table 26A Comparison of LWA Products Absorptions
Table 27 Comparison of LWA Products Geotechnical Results
Table 28 Fate Assessment Evaluation – Mercury
Table 29 Fate Assessment Evaluation – PCBs and Halogens
Table 30 Dredge-to-LWA Process – Emission Comparison

List of Abbreviations and Acronyms

BNA	Base, Neutral, and Acid Extractable compound
BNL	Brookhaven National Laboratory
CEM	Continuous emission monitor
Cl_2	Chlorine
CO_2	Carbon dioxide
CO	Carbon monoxide
dscf	Dry Standard Cubic Feet per Minute
FAC	Fuller Air Compliance
HBr	Hydrogen bromide
HCl	Hydrogen chloride
HF	Hydrogen fluoride
ksc	Kilograms/cm^2
LWA	Lightweight aggregate
lb/cf	Pound per cubic foot
lb/hr	Pound per hour
MEP	Multiple Extraction Procedure
mg/kg	milligram/kilogram (part per million)
mg/L	milligram/liter (part per million)
MMBTU	million British thermal units
ng	nanogram (1×10^{-9} grams)
NH_3	Ammonia
NJMR	State of New Jersey Office of Maritime Resources
Nm^3	cubic meter
NOx	Nitrogen oxides
O_2	Oxygen
PCB	Polychlorinated Biphenyl
PCDD	Polychlorinated Dibenzo-*p*-Dioxins
PCDF	Polychlorinated Dibenzofurans
pg/g	picogram/gram (part per trillion)
ppb	part per billion
ppm	part per million
ppmdv	part per million dry volume basis
rpm	revolutions per minute
scfm	standard cubic foot per minute
SO_2	Sulfur dioxide
st	short ton (2000 pounds)
SVOC	Semivolatile Organic Compound
TCLP	Toxicity Characteristic Leaching Procedure
THC	Total Hydrocarbons
UESPA	United States Environmental Protection Agency
ug/kg	microgram/kilogram (part per billion)
ug/L	microgram/liter (part per billion)
VOC	Volatile Organic Compound
VOST	Volatile Organic Sampling Train
WRDA	Water Resources Development Ac

1.0 Project Introduction

1.1 Project Background

The need to achieve an environmentally acceptable and economically beneficial use option for the management of dredged material is self-evident in order to retain and enhance the viability of America's waterways and harbors.

The port facilities, harbors and waterways of the United States require periodic dredging to provide adequate draft for large ocean going vessels. Further, dredging is often required in order that draft can be maintained for barge movement. Historically, the disposal of dredged material has not posed a significant problem. Routinely, dredged material was hauled offshore and deposited in various open water options, e.g., open dumping at sea, in borrow pits or confined disposal facilities ("CDFs") near shore or at sea. Alternately, dredged material was placed in upland CDFs near the site of the dredging activity. In recent times, the ability to utilize these management options has been significantly limited due to concerns surrounding the potential impact of contaminants, both organic and inorganic, on the environment.

The Port of New York and New Jersey ("NY/NJ") serves as a prime example of this problem. While the Port would appear to be prosperous and growing, its rate of growth is substantially behind its major US and international competitors. The worldwide trend for shipping is for increased containerization in larger ships. As other ports deepen their harbors to accommodate these new generation vessels, the Port of NY/NJ is faced with serious challenges to maintain the current depth of its channels and berthing areas, let alone to increase them. The disposal options for dredged material were changed when the requirements for ocean placement became more stringent. Due to the concern over the contamination of sediment from many years of industrial activity in the Port and its long-term potential degradation, the criteria for ocean disposal of dredged material were revised in 1992. These revisions include increased sensitivity in detection limits and more stringent criteria for assessing chronic impacts. Under the revised criteria, about 75% of the dredged material fails the ocean disposal test. Therefore, a major obstacle facing the Port and potentially impacting its future viability is the lack of acceptable and reliable means of disposing of the millions of cubic yards of material that must be dredged to both maintain the current depth and provide the additional depth for the new generation of container vessels.

In March, 1998, the State of New Jersey, Office of Maritime Resources ("NJMR") issued RFP/Bid No. 98-X-9999 requesting contractors to provide proposals that would demonstrate innovative strategies for the dredging and management of dredged materials from the NY/NJ Harbor. This RFP sought reliable sediment decontamination technologies capable of producing marketable end products, i.e., those providing beneficial use(s) at a commercial scale of 500,000 cubic yards per annum.

The RFP issued by NJMR provided that the scope of the work involve two principal tasks, a Pilot Study and a Demonstration Project. The Pilot Study encompassed the processing of approximately 200 gallons of sediment with the subsequent Demonstration Project processing somewhere between 30,000 to 150,000 cubic yards of sediment. As stated by NJMR, "the purpose of this multi-stage approach is to prove that the selected technology meets all applicable objectives on a small scale before moving to the full-scale demonstration."

JCI/UPCYCLE Associates, LLC ("JCI/UPCYCLE") was chosen by NJMR to demonstrate its technology for the production of lightweight aggregate from dredged material and commenced the Pilot Study in June 2000 under Contract Number AO #9350203. In further support of the Pilot Study, USEPA under its WRDA authority and contracting agreement with Brookhaven National Laboratory, Contract Number 48172, provided additional funding for a comprehensive environmental testing and characterization program.

JCI/UPCYCLE's technological and commercial approach focuses on the utilization of dredged material as a feedstock in the manufacture of a value-added building material, lightweight aggregate ("LWA"). The technology involves the processing of the dredged material in two distinct steps, the first being the pre-kiln processing/dewatering step and the second being the kiln processing step. The pre-kiln step includes debris removal, initial material sizing, and solids-liquid separation/dewatering of the dredged material resulting in the formation of a filter cake. The kiln processing step includes the hammermill drying and grinding of the dewatered dredged material filter cake, the pug milling and extrusion of the material into pellets, and finally, the rotary kiln manufacture of the extruded pellets into LWA.

The JCI/UPCYCLE approach contemplates the construction and operation of a pre-kiln processing facility proximate to the Port of NY/NJ Harbor region, with the subsequent kiln processing being conducted at existing LWA facilities located outside of the region, but readily accessible via rail and/or truck.

1.2 Project Organization

JCI/UPCYCLE assembled the following team to provide services for the Pilot Project. The primary organizations and their responsibilities are outlined below.

JCI/UPCYCLE Associates, LLC	Prime Contractor and Pilot Study Project Manager
UPCYCLE Aggregates, LLC	Pilot Study Project Engineer
Jay Cashman, Inc.	Pilot Study Site Manager
GZA GeoEnvironmental, Inc.	Dewatering Phase Sampling and Analysis Contractor
Operations Services Corporation (Solomon Technologies, Inc.)	Dewatering Contractor
FFE Minerals USA, Inc. (Fuller Corporation)	Kiln Processing Phase Contractor/Consultant
Fuller Air Compliance	Kiln Processing Phase Environmental Testing and Analysis Contractor
SOR Testing Laboratories, Inc.	LWA Physical Product Testing Contractor
STS Consultants, Ltd.	LWA Product Geotechnical Testing Contractor
New Jersey Institute of Technology	Data Validation Contractor

The following agencies provided independent evaluations of the lightweight aggregate product manufactured during the Pilot Project.

Port Authority of NY/NJ
New Jersey Department of Transportation
New York State Department of Transportation

2.0 Project Description and Objectives

2.1 Project Description

The pilot sediment decontamination and beneficial use pilot study ("Pilot Project") was conducted by JCI/UPCYCLE Associates, LLC for the New Jersey Department of Transportation, Office of Maritime Resources, Contract Number AO #9350203, and for USEPA under its WRDA authority and contracting agreement with Brookhaven National Laboratory ("BNL"), Contract Number 48172.

The Pilot Project encompassed the pre-kiln processing/dewatering related activities conducted on-site at the Stratus Petroleum facility in Newark, NJ, and the initial laboratory testing and rotary kiln processing conducted at the FFE Minerals R&D facility in Catasauqua, PA.

Approximately 2,500 cubic yards measured in-situ of as-dredged material from the Stratus Petroleum facility were scheduled to be processed and dewatered under the Pilot Project. The disposition of the resulting dewatered filter cake was to be 2,000 cubic yards for JCI/UPCYCLE and 500 cubic yards for IGT/ENDESCO.

Due to unforeseen circumstances described later in this report, it was not possible to process and dewater the entire 2,500 cubic yards as planned. JCI/UPCYCLE subjected approximately 4 cubic yards of dewatered dredged material filter cake to the rotary kiln processing phase while approximately 350 cubic yards of dewatered filter cake were provided to IGT/ENDESCO.

The pre-kiln or solid-liquid separation/dewatering phase provided debris removal, initial sizing and dewatering of the as-dredged material utilizing proprietary technology in conjunction with established belt filter press processing. Figure 1 is a Process Flow Diagram for the pre-kiln/dewatering phase. Bulk sediment chemistry results from the as-dredged material, dewatered filter cake and effluent dewatering liquid are presented, as is the toxicity analysis for the effluent dewatering liquid.

The rotary kiln processing phase included the hammermill drying and grinding of the dewatered dredged material filter cake, the pug milling, and extrusion and kiln manufacture of the extruded pellets into lightweight aggregate. Figure 2 is a Process Flow Diagram for the rotary kiln processing phase. As part of this phase, an emissions testing program and full characterization (both chemical and physical) of the lightweight aggregate produced from the extruded dredged material feed pellets was performed. The emissions testing program also included characterization of all input and output streams associated with the kiln process. Additionally, comprehensive physical and geotechnical evaluations and testing of the lightweight aggregate produced were completed. The results of this extensive testing program are presented in this report.

Figure 1
Process Flow Diagram
Pre-Kiln / Dewatering Phase

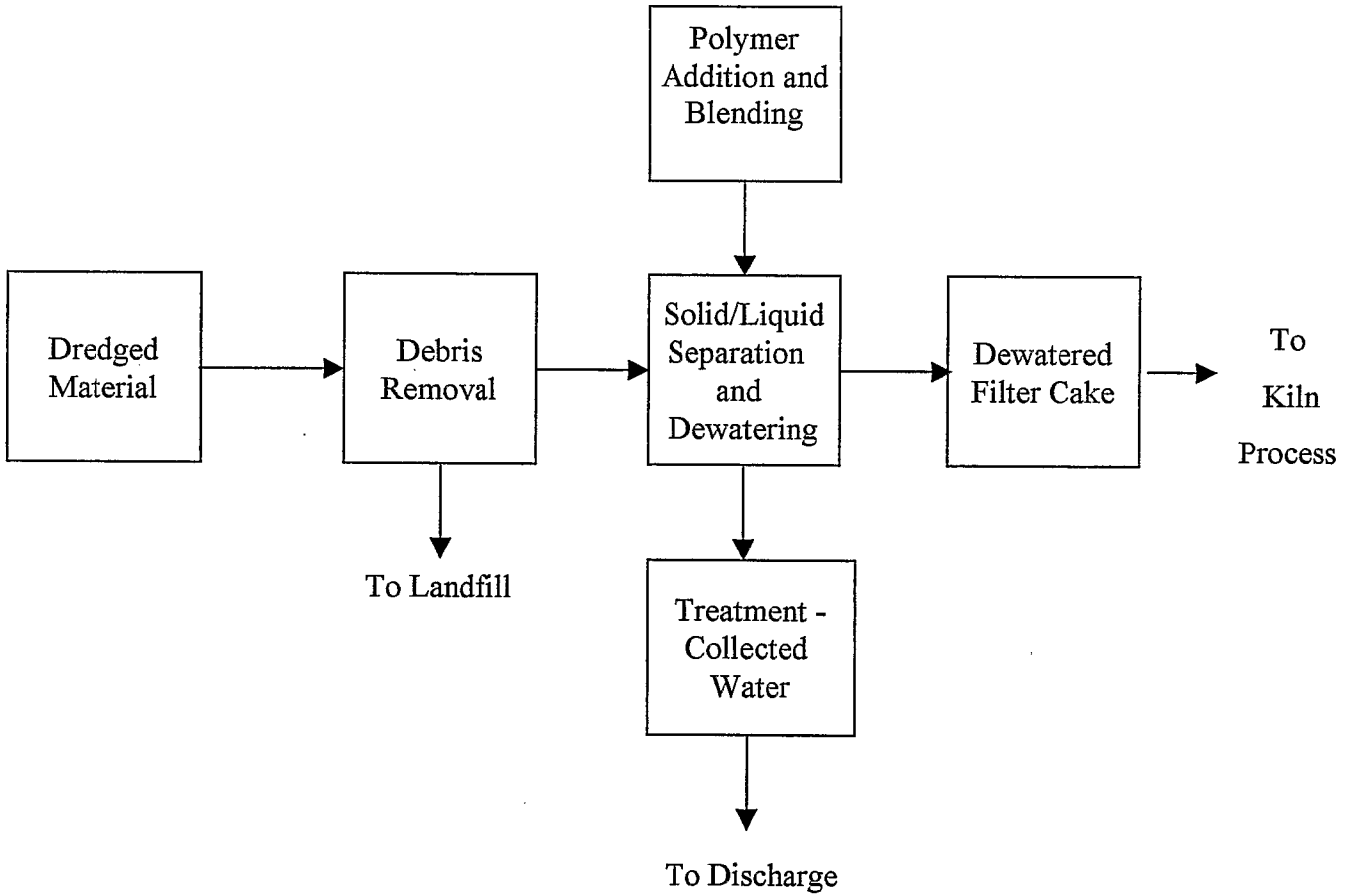

JCI/UPCYCLE Associates, LLC

Figure 2
Process Flow Diagram
Kiln Processing Phase

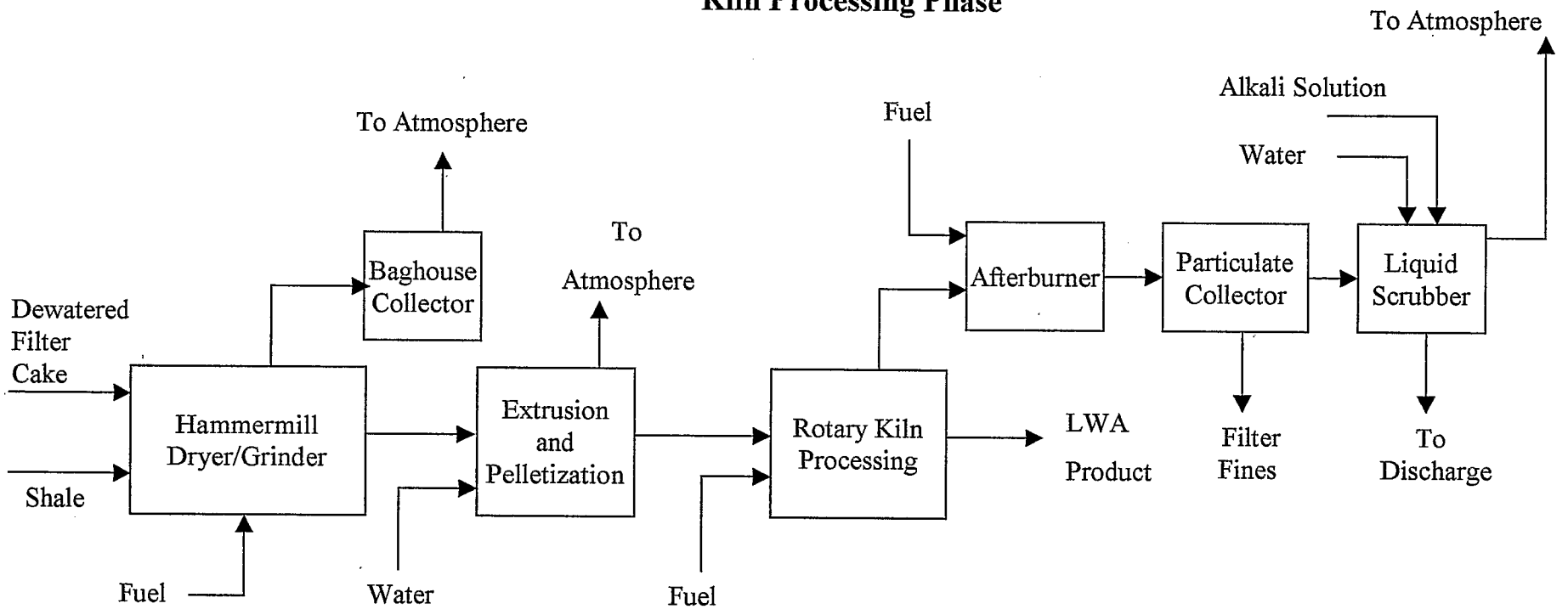

This report provides the conclusions on the technical feasibility of the process based on the work performed during the Pilot Project. It also provides a projection of its economic viability on a commercial scale, i.e., 500,000 cubic yards per year of dredged material (in-situ), and finally makes recommendations on changes and/or improvements suggested from the Pilot Project to be incorporated into the Demonstration Project.

2.2 Project Objectives

The general objectives of the Pilot Project were as follows:

- To demonstrate at pilot scale that dredged material can be converted to a quality lightweight aggregate product meeting technical and environmental criteria.
- To provide test data upon which to base the engineering design for commercial scale dewatering and lightweight aggregate production facilities.
- To serve as a key component of an R&D program being undertaken by JCI/UPCYCLE to support Alternate Use and/or Beneficial Use Determinations for LWA manufactured from dredged material.

The specific technical objectives for the Pilot Project were as follows:

- To demonstrate the adequacy of the equipment planned for dewatering, drying, extruding and rotary kiln processing.
- To quantify air emissions for the design of air pollution control (APC) equipment and systems to satisfy regulatory requirements.
- To determine production and energy consumption rates for the full-scale facilities.

3.0 Project Discussion and Results

3.1 Pre-Kiln Processing (Solid-Liquid Separation/Dewatering)

3.1.1 Dredged Material Condition and Project Mobilization

The Stratus Petroleum site sediments were initially dredged over a two-day period, November 16 and 17, 1999, and placed in barges for the dewatering phase of the project. However, due to the time delay that occurred between the actual dredging operations and the Notice to Proceed (June 2000), the material within the barges was not in an "as-dredged" condition. With time, the sediment had developed a desiccated crust estimated to be between 1.5 to 2.0 feet thick and hence was non-homogenous in nature. Since the material was not in accordance with the design conditions, further processing of the barged material was judged necessary.

Given the material condition and concerns with regard to modeling of the actual dredged material, the assistance of the USEPA and USACE was enlisted. In order to proceed, it was agreed to return the sediment to its "as-dredged" condition and thus to be representative of typical as-dredged material to be routinely processed.

Mobilization and preparation of the Stratus site for the handling and dewatering operations was commenced by JCI/UPCYCLE on July 5, 2000. On July 12th, the USACE vessel, Hayward moved the two barges to the Stratus dock and began a process to "re-water" and mix the material in the barges. Coincident with this work and in accordance with the approved Work Plan, USEPA and USACE provided JCI/UPCYCLE with "as-dredged" material samples for complete chemical analyses. These samples were given to JCI/UPCYCLE's subcontractor, GZA GeoEnvironmental, Inc. who was responsible for packaging and shipment via overnight delivery to the specified analytical laboratory.

The results of the Hayward's efforts were insufficient to properly mix and achieve the necessary degree of homogeneity for processing. After consultation and agreement with NJMR, a deck scow with excavator was provided to properly re-water and mix the sediment. The deck scow and excavator arrived on-site and began work on July 20, 2000.

Coincidently, all mobilization efforts were completed on July 20, 2000, and initial commissioning runs commenced thereafter.

3.1.2 Commissioning Trials - Dredged Material Dewatering System

The initial dewatering testing was designed solely to allow Operation Services Corporation ("OSC"), the dewatering contractor, to define the slurry pulp density, flow rate and polymer dosage required to achieve optimal dewatering. The first runs, lasting no more than a few minutes in duration, indicated that the as-received slurry from the barge was too thick, causing poor floccule formation. Laboratory screening had indicated that a pulp density between 10-15% solids by weight would be most ideal to effect optimal dewatering. The preliminary results of the first runs, based on coriollis meter readings, indicated that pulp density was greater than 20% solids by weight with some readings greater than 25% solids by weight. To correct this situation and to lower pulp density to the preferred range, Passaic River water was added to the slurry feed tank. Further piping modifications were performed by OSC to allow pressate water to be mixed with the slurry in the slurry feed line to, in effect, utilize pressate water in a recycle mode as the necessary dilution water. This modified piping arrangement allowed the slurry to be diluted by trimming the slurry feed valve and the pressate water recycle valve. These changes allowed slurry pulp density to be readily adjusted via a combination of transfer pumps and recycle lines.

As originally envisioned and proposed in the Work Plan, a briquette press was to be used to mold the dewatered dredged material into a discernable shape to permit easier handling of the resulting filter cake product. A few short tests of the briquetter were attempted during these initial commissioning runs. While filter press operations had not been optimized, some small quantity of dewatered filter cake provided an opportunity to operate the briquetter and to evaluate its performance. These early tests indicated that the filter cake was not free flowing, but rather was "plastic" in nature. This plasticity of the dewatered filter cake can be attributed to its mineralogy, i.e., fine silts and clays. The feed screw that gathered and delivered the filter cake from the doctor blade on the filter press to the feed system on the briquetter turned the filter cake into a paste like mass that seemed to further exacerbate the "stickiness" problem. The rheology of the dewatered material is believed to have prevented it from freely flowing through the gravity feed hopper above the briquetter down into the briquetter rolls. The material formed a bridge condition above the rolls and would not feed down into the nip region (narrow gap between the rolls). It is surmised that the rheology and condition of the dewatered filter cake material allowed the briquetter rolls to spin on the material thus inhibiting the development of the necessary frictional force to draw the filter cake into the nip region and thereby forming the

briquettes. Some briquettes were produced but would lose their shape upon being transferred onto the adjoining conveying system. Several briquettes were manually removed prior to the transfer point and set aside. These briquettes that were allowed to cure in the sun did achieve the desired shape and hardness after approximately 5 hours of elapsed time.

3.1.3 Commissioning Trials - Initial Chemical Analysis

During the commissioning trials of the dredged material dewatering system, preliminary analytical results for the mercury ("Hg") concentration of the as-dredged sediment were received. Given the primacy focus attached by NJDEP to Hg and the fact that NJDEP had included specific Hg limitations in the Air Pollution Control Operating Permit issued to JCI/UPCYCLE for the pre-kiln processing steps to be completed at Stratus Petroleum, expedited analysis was specified for Hg.

The Hg results from the three composite samples of the as-dredged material provided by USEPA and USACE referenced above, ranged from 4.6 to 5.2 ppm on a dry weight basis, in excess of the 3 ppm limit imposed within the permit by NJDEP. The permit conditions precluded the processing or dewatering of as-dredged material having a mercury concentration in excess of 3 ppm on a dry weight basis.

Upon receipt of these results and transfer of these data to NJDEP and NJMR, discussions were immediately initiated with representatives of both NJDEP and NJMR. NJMR advised that it was permissible to continue commissioning and debugging tests while the agencies reviewed and determined the appropriate actions to allow the pilot test to be conducted.

3.1.4 Commissioning Trials – Continuing Actions

Based upon the guidance and directive from NJMR, commissioning runs for the dredged dewatering operation were continued on July 21, 2000. The filter press produced a thin filter cake, approximately 3/8" thick that broke apart under its own weight as it flowed into the receiving screw conveyor. No free moisture was observed nor could free moisture be squeezed from the filter cake. These additional tests essentially yielded the same results as the initial round of tests, namely, that the highly plastic nature of the dewatered material prohibited feeding the briquetter by gravity alone. Even under conditions when the filter cake was forced into the nip region of the briquetter, the cake failed to release from the rolls and to form briquettes. The dewatered material made during these processing runs was placed into two stockpiles, one that was covered and one that was uncovered. The purpose of this segregation was to evaluate any differences in surface moisture with time.

On July 24, 2000, (after approximately 72 hours of elapsed time), the two stockpiles of filter cake were visually examined. The pile that had been covered was still moist and did not display any apparent surface drying. The uncovered pile also did not display any visual change nor did it show any amount of free moisture. Commissioning trials continued to quantify key operating parameter information, i.e., pulp density, filter cake solid content and effluent liquid (total suspended solids) quality.

A site meeting was held on July 26, 2000 between JCI/UPCYCLE personnel and Mr. Scott Douglas, NJMR's Project Manager to review progress and issues encountered to date. At that meeting, it was agreed that due to the mineralogy, rheology and plasticity of the dredged material, that briquetting of the dewatered filter cake was not feasible without additional

treatment unit operations. Given the perceived necessity to obtain NJDEP approval for any process changes and subsequent permit modification, it was further agreed to eliminate the briquetting step from the Work Plan. Also, given permit operating conditions, it was decided to "stand down" and wait NJDEP's decision regarding the concentration of Hg levels within the as-dredged material as discussed above.

Project report summaries and evaluations from OSC and from Lewis Corporation, the briquette press manufacturer, are included in the Appendix.

3.1.5 Lightweight Aggregate Processing Facility Issues

During this commissioning period, JCI/UPCYCLE was informed that the NYSDEC had rethought their previously stated position with respect to Norlite Corporation and Norlite's involvement with this Pilot Project. Norlite Corporation is an expanded shale, rotary kiln lightweight aggregate manufacturing facility located in Cohoes, NY. An integral part of Norlite's operation is the use of hazardous wastes as fuel for the manufacturing process. NYSDEC had previously stated that Norlite's existing operations vis-à-vis the use of dredged material as a substitute feedstock for the process were not linked and that decisions relating to the use of dredged material would be made independently.

However, due to results Norlite received from its most recent Risk Burn coupled with the anticipated outcome from the concomitant Risk Assessment and other associated operational issues, NYSDEC reversed its prior position thus linking the Pilot Project with RCRA regulatory requirements. On August 11, 2000, Norlite informed the NYSDEC that it "can no longer be involved or considered a potential processor of harbor dredge material until these issues are resolved to our satisfaction and that of the NYSDEC."

Coincidently, and in anticipation of the outcome of the these events, an alternate plan was developed to permit the objectives of the Pilot Project to be achieved, namely, the demonstration of decontamination of the dredged sediment and its subsequent beneficial use.

The alternate plan conceived expanded on the scope of work of FFE Minerals (Fuller Company) already contemplated and included in the Work Plan. Specifically, the expanded scope of work extended the pilot rotary kiln testing at Fuller's R&D facility to produce 4 tons of LWA and to allow for the completion of a comprehensive emissions testing program. It should be noted that the emissions testing program component of the Pilot Project was planned for completion at Norlite. The alternate emissions testing and analysis plan involving the Fuller facilities are equivalent to that prescribed for Norlite in its level of testing, its thoroughness and its QA/QC objectives.

On August 21, 2000, a meeting was held in the offices of NJMR with representatives of NJMR, NJDEP, USEPA and JCI/UPCYCLE to review all issues to date and expressly to obtain agreement to proceed with the expanded program at Fuller. Pursuant to that meeting and to a subsequent telephone conversation on August 23, 2000, agreement was reached and NJMR so directed JCI/UPCYCLE to proceed.

On August 22, 2000, revised permit conditions were received from NJDEP with respect to the Hg concentration limits of the as-dredged material rescinding the prior Hg permit limitation. With resolution of the Hg question from NJDEP, JCI/UPCYCLE resumed processing and dewatering operations on August 28, 2000. Approximately four cubic yards of as-dredged

material were dewatered and placed into drums for further analysis, testing and processing at Fuller. Additionally, 20 rolloff containers (350+ cubic yards) of dewatered filter cake were filled for IGT/ENDESCO as part of the original Work Plan.

Dewatering operations were completed on September 2, 2000. The dewatered filter cake collected for the kiln processing phase at Fuller, was shipped to Fuller during the week of September 4, 2000. As directed by NJMR, the remainder of the as-dredged material on the barges, estimated to be in the range of 2,000 cubic yards, including collected pressate and wash waters from the completed dewatering operation, was disposed into the NJ Confined Disposal Facility in Newark Bay. Demobilization efforts at the Stratus site were completed on or about September 18, 2000.

3.1.6 Dredged Material Dewatering Processing Issues

3.1.6.1 Physical Handling Issues

One key issue that surfaced during the dewatering of the as-dredged material is related to the problems associated with the physical handling of the sediment. Prior attempts (by others) of off-loading of the barges centered on the use of excavators with clam-shell buckets. That method, while accomplishing the task, posed spillage and containment concerns as well as logistical concerns pertaining to conveyor placement, distance, transfer points and possible air emissions. It was demonstrated that by properly preparing the sediment, it could be readily transferred by pump without the concerns associated with a conveyor system. Critical to this determination was the use of the correct pumping system, i.e., pump specification including volume and total head required, pump driver selection, and line sizing. The experience gained during this pilot project indicated that there are commercially available pumps to handle dredged sediments and that the preferred pump driver is one that provides the operating variability associated with a hydraulic power pack.

3.1.6.2 Debris Removal Issues

A second issue is related to the type and quantity of debris that may be encountered in the as-dredged material. While the sediment taken from the Stratus Petroleum site was essentially "clean" with an absolute minimal amount of debris, the potential problem of debris and adequate and proper debris removal and disposal remains. To resolve this issue, debris removal and scalping steps need to be included as the material is initially dredged and again prior to the material being placed into the holding system feeding the dewatering process. Proper debris removal is directly related to the ability to off-load the barges via pump and thereafter, to providing continued uninterrupted operation of the dewatering processing equipment.

Commercial considerations further dictate the need to off-load the barges holding the as-dredged material as expeditiously as possible to minimize barge demurrage. Under this scenario, it will be prudent to provide interim storage capability that will not only act to provide buffer capacity, but as importantly, to smooth processing operations by optimizing equipment size and material throughput.

3.1.7 Phase 1 Laboratory Study at FFE Minerals (Fuller Company)

The Fuller scope of work entailed two distinct phases with Phase 1 being the Laboratory Study and Phase 2 being the expanded pilot rotary kiln program complete with emissions testing and analysis.

The Phase 1 Laboratory Study was undertaken during the period from October 4 through 12, 2000. The general purpose of Phase 1 was to evaluate the feasibility of producing a quality LWA from dewatered dredged filter cake. Specific objectives of the Phase 1 Laboratory Study included:

- Assessment of the suitability of the chemical composition of dredged material (dewatered filter cake) for the production of LWA.
- Determination of the bloating (expansion) potential of the dewatered filter cake.
- Evaluation of the benefits associated with the addition of raw shale fines to the dewatered dredged material in terms of bloating and aggregate strength.
- Evaluation of the need to add an organic bloating enhancing agent to enable the production of a LWA with a bulk density < 40 lb/cf.

The chemistry of the dewatered dredged material filter cake was found to be acceptable for the production of LWA in terms of its complete oxide composition. Subsequent analyses of dredge material/raw shale fines mixes containing 0 to 100% raw shale also indicated that the chemical composition of all mixes were acceptable for LWA production. Figure 3A is a Composition Diagram that provides this data. Therefore, any level of shale addition is acceptable for the purpose of optimizing the quality of LWA produced.

A series of laboratory furnace burns were performed to evaluate the bloating properties of dredged material and dredged material/shale fine mixes extruded to form ½" diameter pellets containing about 15% free moisture. Given the organic content in the dredged material, bloating was achieved when the pellets were subjected to the proper firing conditions precluding the need to add a bloating enhancing agent. However, while expansion was accomplished, the higher content of organic material in the dredged material filter cake (2.45% total organic carbon) promoted uneven pore formation and pellet sticking. Several mix designs were prepared containing the dewatered dredged material and 10-30% raw shale. The addition of raw shale fines to the mix (ground to minus 100 mesh) led to improvements in the level of bloating and in aggregate pore structure in conjunction with the reduction or elimination of sticking.

All aggregate samples produced in the laboratory furnace burns were subjected to crushing tests to obtain a relative measure of strength. In general, the aggregate samples exhibited crushing strength levels greater than 150 pounds. Based on Fuller's extensive experience, aggregates demonstrating a crushing strength >100-125 pounds will support the production of lightweight concrete exceeding applicable ASTM specifications.

Laboratory emission tests were also performed to provide a preliminary indication of the potential emissions of SO_2, CO and total hydrocarbons from the feedstock during pyroprocessing. While the results from these laboratory tests suggested that some form of air pollution control equipment might be required as part of commercial processing, the Phase 2 pilot rotary kiln test program and emission evaluation would yield the comprehensive data

Figure 3A

FULLER®
RESEARCH & DEVELOPMENT
A member of the F.L.Smidth-Fuller Engineering Group

Composition diagram of major oxides showing area in which substances fire to a mass viscous enough to insure good bloating.

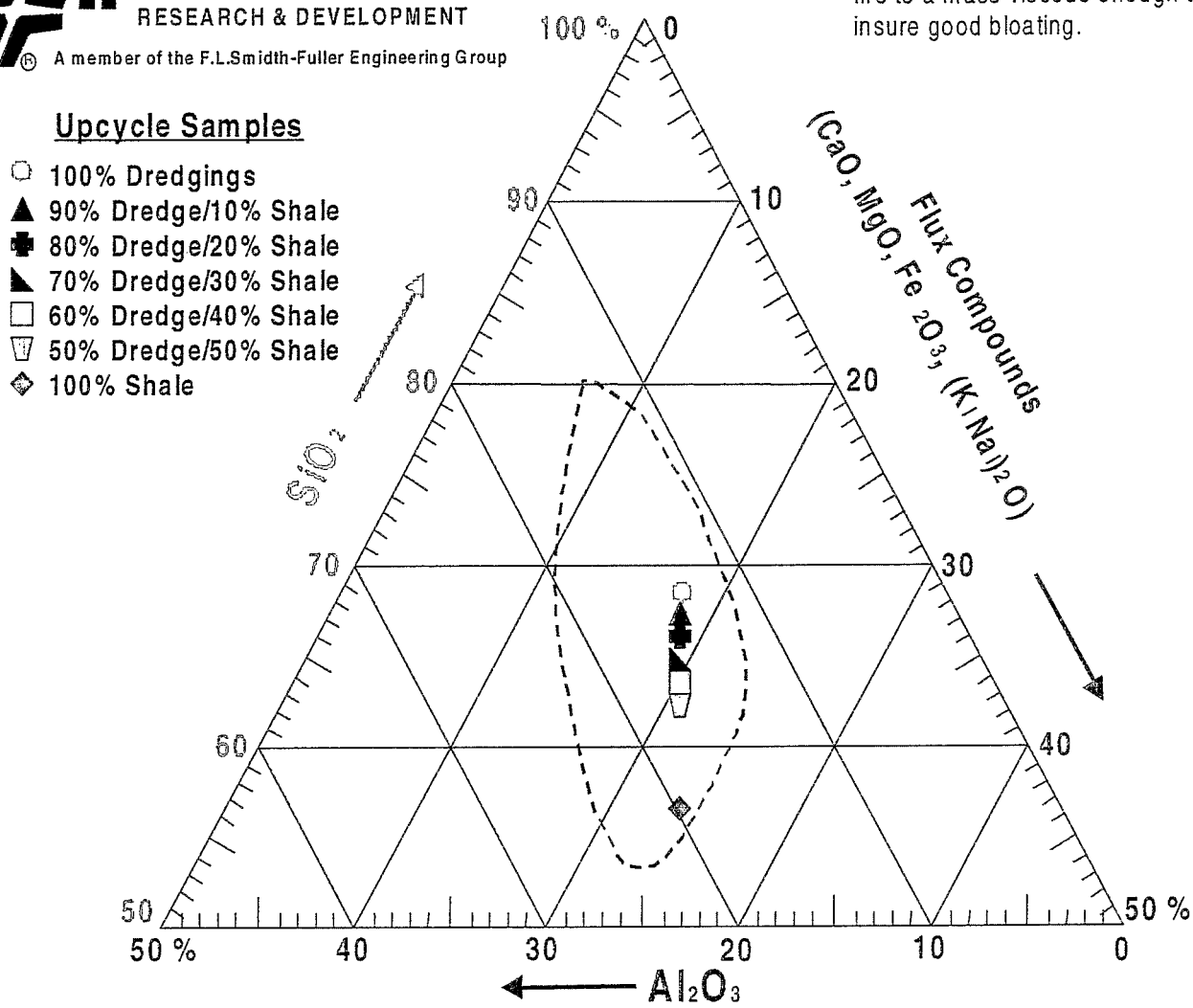

Composition Diagram

needed to project emission levels for the commercial LWA production process and for the design of appropriate pollution control equipment.

The laboratory study demonstrated the capability of producing LWA from a feedstock containing 70-100% dredged material without the need for the addition of organic bloating enhancing agents. Upon considering the current process, technical, economic and market factors, a feed mix containing 70% dredged material and 30% raw shale (dry basis) was recommended for the follow-on Phase 2 pilot rotary kiln study to confirm the manufacture of a LWA characterized by a bulk density of +/-35 lb/cf and acceptable strength.

The final component of the Phase 1 Laboratory Study was a brief, preliminary pilot rotary kiln run to confirm the observations made during the laboratory furnace burns. This run utilized approximately 300 pounds of the preferred design mix of 70% dredged material/30% raw shale. Basic operating conditions employed were: 1050-1100°C kiln hot zone temperature, 50 lb/hr pellet feed rate and 45-60 minute material residence time. An aggregate with a bulk density <35 lb/cf was successfully produced in the pilot rotary kiln. A number of equipment and process improvements were noted during this preliminary test for incorporation into the Phase 2 test program to optimize process control and stability.

FFE Minerals Phase 1 Study Report is a part of their final project report titled "Pilot Project – Production of Lightweight Aggregate from Dredged Material, June 2001" ("FFEM Final Report") dated June 2001. The entire FFEM Final Report is cited as a Reference Document.

3.2 Rotary Kiln Processing

The procedures that were followed during the pilot rotary kiln test program carried out at the Fuller Company R&D facility in Catasauqua, PA are fully described in the report titled "Test Program for the Sediment Decontamination Pilot Project" prepared by FFE Minerals Research & Development Department, March 28, 2001, Revision 004 ("Test Report"). The Test Report document is a part of FFE Minerals Final Report that is cited as a Reference Document. This latest version of the Test Report, Revision 004, also addressed comments made by Dr. Huan Feng as a member of the WRDA/Brookhaven National Laboratory team.

The dewatered filter cake collected and processed for the rotary kiln phase of the Pilot Project was shipped to Fuller during the week of September 4, 2000.

The Phase 2 rotary kiln test program was conducted in three separate operations. The first operation involved the use of a pilot hammermill dryer/grinder system to further dry the filter cake. This drying/grinding operation was required to produce a fine, free-flowing material that could then be homogenized with ground shale and extruded. Also included in this first operation was sampling and analysis by Fuller Air Compliance ("FAC") of hammermill system emissions measured at the baghouse outlet for dioxins/furans, particulate, mercury, total hydrocarbons, as well as for SO_2, NOx and CO. The data collected by FAC was used to predict emission rates from the hammermill dryer/grinder circuit. Simultaneously, Fuller personnel also performed continuous analysis at the baghouse outlet of this gas stream to determine concentrations of NOx, SO_2, CO, CO_2 and O_2 for the sole purpose of developing an emission profile for the duration of the hammermill operation.

The second operation involved the pug-milling and extrusion of the dried and ground filter cake with the raw shale to produce the feed pellets for the rotary kiln. Material was fed to the open

section of the pug-type mixing assembly where mixing paddles moved the material to the compression zone during the mixing process. Material was collected by screw flights in the compression zone and then compressed with the material being forced through holes in the die plate to produce ½ inch diameter by 1-2 inch long extrusions. A total of 4,119 pounds of extruded feed pellets were produced.

The third and final operational step was the rotary kiln processing of the extruded feed pellets coincident with environmental monitoring and testing of the kiln off-gas and scrubber off-gas streams by FAC and subsequent analyses of these gaseous emissions and process related samples collected during the kiln operation. The Fuller pilot rotary kiln was 1' inside diameter by 15' long and was lined with a high alumina (70% Al_2O_3) refractory brick. The pilot rotary kiln system was comprised of a hopper and bucket elevator to feed the kiln, the kiln itself with an integrated product cooler, an induced draft fan, and an air pollution control system consisting of an afterburner, ceramic filter collector and recirculating wet scrubber. Emission measurements for the kiln and scrubber off-gas streams included: SO_2; NOx; CO; THC; particulate; dioxins/furans, semivolatile organics and PCBs; metals; volatile organics; HCl; HBr; HF; Cl_2; NH_3; and hexavalent chromium. Process related samples include: fuel oil; shale; feed pellets; ceramic filter catch; LWA product; and scrubber makeup water and scrubber liquor. A total of 3,084 pounds of LWA were produced with an average bulk density of 37.6 lb/cf using a maximum kiln load temperature of 1077°C and 39 minute total material residence time within the kiln.

3.2.1 Pilot Hammermill Dryer/Grinder System

The dewatered dredged material filter cake and shale fines were dried separately and ground to minus 100 mesh using the air-swept pilot hammermill system with an exit gas temperature of 80-90°C. This drying/sizing operation was necessary to produce fine, free-flowing materials that could then be homogenized and extruded to form the feed pellets for the rotary kiln.

The target hammermill system operating conditions for drying the dewatered dredged material filter cake were as follows: 1000 scfm air input, 500 lb/hr filter cake feed rate and 80-90°C mill outlet gas temperature. Previous work had shown that operation of the hammermill system within this outlet gas temperature range minimized the potential for CO and hydrocarbon emissions from the dredged material.

The dewatered dredged material filter cake (6,504 pounds) with a free moisture level of 57% (by weight) was dried to yield 2,497 pounds of free-flowing material with a moisture level of 4.43% (by weight). Due to the plastic like nature of the filter cake, substantial sticking was encountered with coincident product buildup both in the hammermill inlet chute and in the hammermill. To overcome this issue, dried product from the baghouse collector was mixed into the filter cake to obtain a material with proper consistency for hammermill operation. A recycle rate for the dried material equivalent to approximately 100% of the dewatered dredged material filter cake feed rate provided a free flowing mix that did not clog or blind the mill. The intermediate product produced from this step had a particle size distribution of 98.1% passing 100 mesh.

A total of 4,587 pounds of raw shale containing 8.05% (by weight) free moisture were dried and ground in the pilot hammermill system producing 3,986 pounds of shale fines with a moisture content of 0.51% (by weight). The fines resulting from this step had a particle size distribution

of 97.5 passing 100 mesh. The Lehigh Portland Cement Company lightweight aggregate plant located in Woodsboro, MD provided the shale used for the pilot rotary kiln test program.

Both FAC and FFE Minerals analyzed the off-gas stream from the hammermill dryer/grinder system at the baghouse collector exit. FAC was responsible for measuring and reporting the emissions of SO_2, NOx, CO, CO_2, O_2, and THC. FFE Minerals sampled and analyzed the same off-gas stream for the same compounds (except for THC) for the express purpose of developing an emission profile for the duration of the hammermill system operation. Only the data collected by FAC has been used to determine emission rates from the hammermill dryer circuit. Emission data is presented in a later section of this report.

The primary components of the pilot hammermill dryer/grinder system are shown on Figure 3 and include the air heater, hammermill, feed circuit and baghouse collector. A detailed discussion of the pilot hammermill dryer/grinder system is provided in the FFEM Final Report.

3.2.2 Pilot Extruder System

A pelletized feed was produced for the pilot rotary kiln system using an extrusion process. The feed pellet preparation involved a four-step operation: 1) blending dried and ground dredged material filter cake with dried and ground shale fines; 2) adding water to increase the moisture content of the blend to approximately 15% (by weight); 3) extruding the blend mixture to produce ½" diameter by 1"-2" long pellets, and 4) subjecting the pellets to a second extrusion to maximize their green strength.

The dried and ground materials and water were hand fed to the open mixing section of the extruder containing a pug-type mixing assembly. The orientation of the mixing paddles moved the material to the compression zone of the extruder during this mixing process. The now blended and mixed material was collected by the screw flights in the compression zone and then was compressed due to the reduction in the diameter of this chamber. A die plate was attached to the discharge side of the compression zone. The material was forced though holes in the die plate with the emerging extrusions breaking off against a stop plate.

Using the process outlined above and the 70% dredged material/30% shale mix design (calculated on a "dry basis"), 1,070 pounds of the 3,986 pounds of the total shale ground was mixed with all of the 2,497 pounds of the dried and ground dredged material filter cake and 552 pounds of water to produce 4,119 pounds of pellets with a moisture content of 14% and with acceptable green strength for subsequent conversion to LWA in the pilot rotary kiln.

A complete discussion of the pilot extruder system and its operation is included in the FFEM Final Report.

3.2.3 Pilot Rotary Kiln System

The operation of the pilot rotary kiln commenced on March 13, 2001 and continued until all of the extruded feed pellets had been processed on March 17, 2001. Concurrent with the operation of the kiln to produce LWA, FAC performed emission testing at the kiln scrubber inlet (gas outlet of the kiln) and at the kiln scrubber outlet. Exclusive of start-up time involving the pre-heating of the kiln and brief operational interruptions due to failure of the kiln feed bucket elevator belt and a brief electrical power outage to the kiln's 110 volt power supply circuit, stable operating and flow conditions were maintained throughout the three (3) day sampling program.

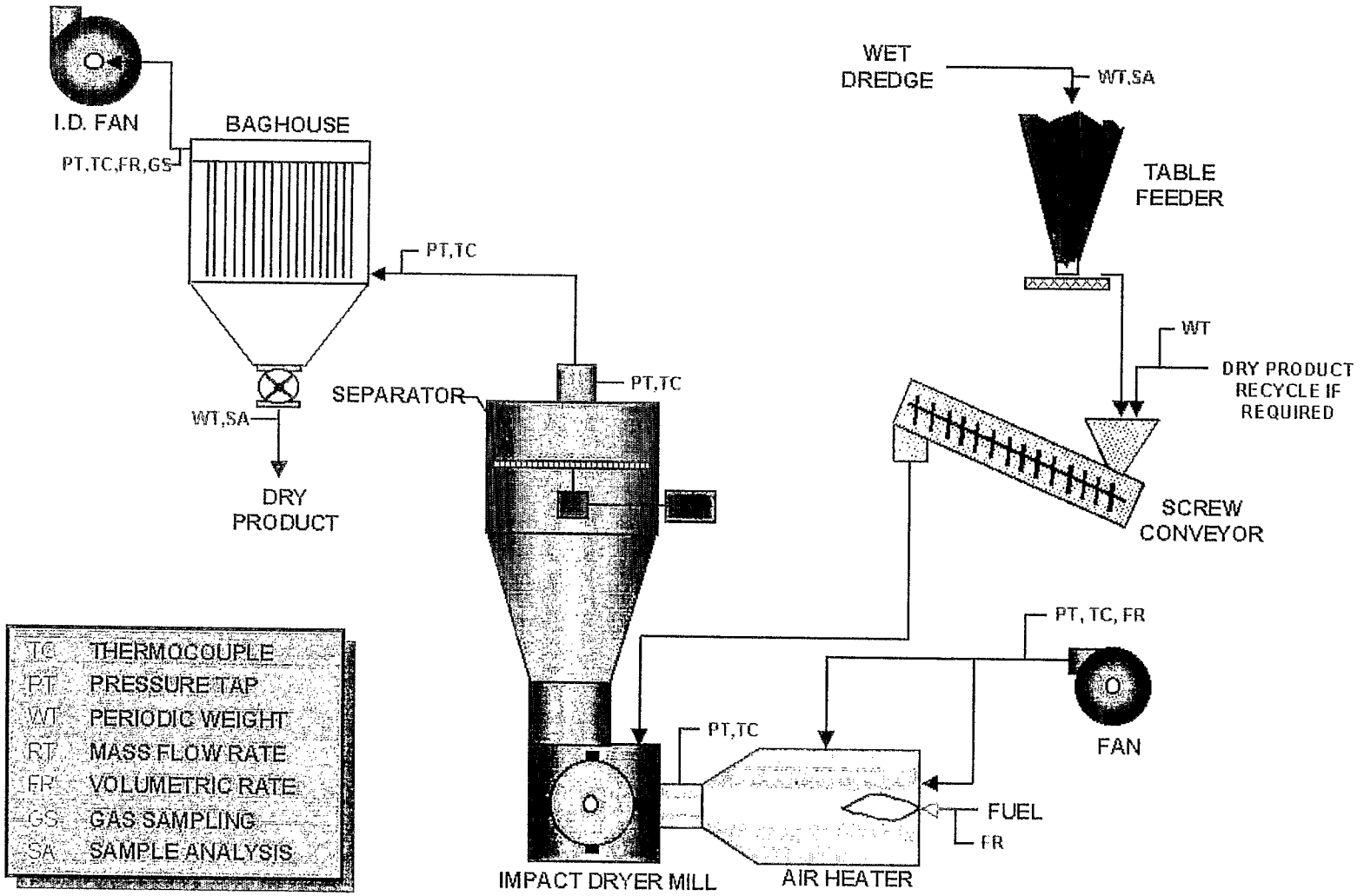

Figure 3 - Hammermill Dryer System Schematic

A complete discussion of the rotary kiln operation is provided in the FFEM Final Report. Details of the emission testing and characterization program and analytical results are provided in a later section of this report.

The primary components of the pilot rotary kiln system include: feed mechanism; rotary kiln with integrated product cooler; induced draft fan; and air pollution control system comprised of afterburner, ceramic filter collector and recirculating wet scrubber. A schematic flow diagram of this system is provided in Figure 4.

Average kiln operating conditions utilized during the period of gas sampling performed by FAC (0800 March 14 through 0545 March 16) were as follows: a) kiln feed rate of 42.8 lb/hr; b) kiln speed of 1.7 rpm; c) material residence time within the kiln of 40 minutes; and d) kiln burning zone temperature of 1075°C. These conditions supported the production of an LWA product with an average bulk density of 37.95 lb/cf well within the ASTM C330 Lightweight Aggregates for Structural Concrete specification of 55 lb/cf (maximum). Attempts were made to reduce the bulk density of the LWA product via process changes, i.e., alteration of the temperature within the burning zone and kiln speed to adjust the material residence time. However, ringing on the interior kiln refractory and agglomeration of the LWA product resulted. Given the more than acceptable LWA product bulk density achieved, further adjustments were abandoned in favor of stable and consistent operation of the kiln.

Upon completion of the gas sampling by FAC, kiln capacity was increased until all of the feed pellets were processed. Average kiln operating conditions during this portion of the program (0600 March 16 through 0300 March 17) were as follows: a) kiln feed rate of 79 lb/hr; b) kiln speed of 1.7 rpm; c) material residence time within the kiln of 37 minutes; and d) kiln burning zone temperature of 1049°C.

Total production from the entire rotary kiln program was 3,084 pounds of LWA with an overall product bulk density of 37.59 lb/cf. Crushing strengths for the LWA averaged >214 lb considered to be very good and exceeding the crushing strengths of many commercially available lightweight aggregates currently on the market. Moisture absorption levels of the LWA product averaged 10.51% and are well below the generally accepted maximum level of 15-20%.

Based on the rotary kiln system material balance for this program and the feed pellet mix design of 70% dredgedmaterial/30% shale, one short ton (2000 pounds) of dredged material filter cake containing 57% moisture yielded 0.546 short tons (1092 pounds) of LWA product. The variables in this calculation, i.e., the mix design ratio of dredged material to shale fines and the moisture content of the dredged material filter cake, will ultimately determine the actual yield of LWA from dredged material.

FFE Minerals concluded that the pilot rotary kiln program successfully demonstrated the production of a quality, marketable lightweight aggregate from dredged material. Commercialization of the process is deemed technically feasible from both process and aggregate quality requirements and standards.

The rotary kiln testing also provided data on the efficacy of the process to achieve sediment decontamination. Table A provides a summary of the overall removal percentages for certain specified metals and organics between the as-dredged sediment and the LWA product. Removal

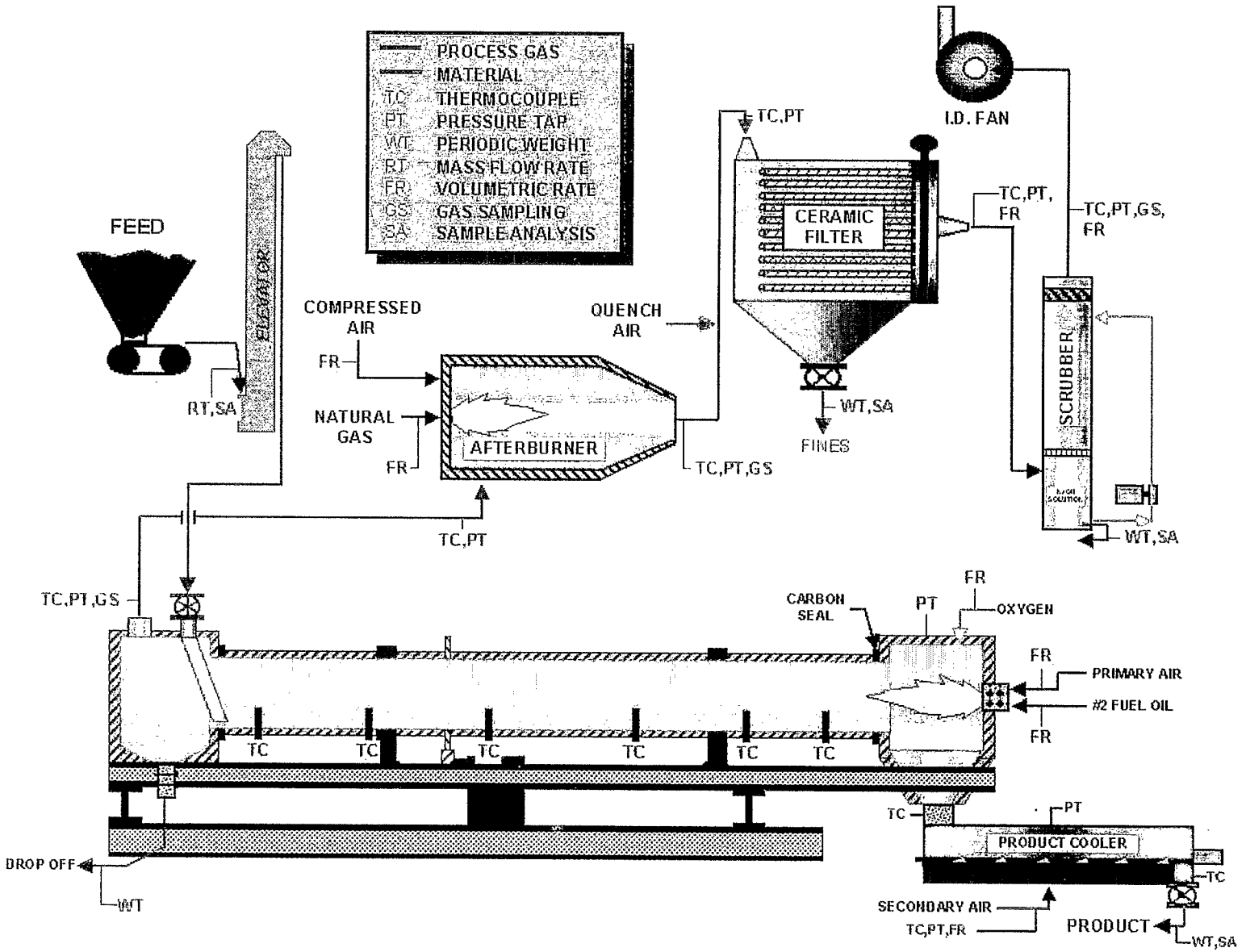

Figure 4 - **Rotary Kiln System Schematic**

Table A

Comparison of Overall Removal Between As-Dregded Sediment and LWA Product Samples

	As-Dredged Sediment	LWA Product	Overall Removal
Metal - mg/kg (dry)			
Arsenic	13.6	9.3	32%
Barium	114	38.5	66%
Cadmium	2.33	ND (<0.5)	>79%
Chromium	148	11	93%
Lead	144	9	94%
Mercury	4.93	<0.147	>97%
Organics - pg/g			
2,3,7,8-TCDD	188	<0.46	>99.99
Total TCDD	235	<0.59	>99.99
2,3,7,8-TCDF	29	0.49	98.31
Total TCDF	395	1.7	99.57
Total PeCDD	23	<0.15	>99.99
Total PeCDF	295	2.0	99.32
Total Hx/Hp OCDD	5065	31.1	99.39
Total Hx/Hp OCDF	2825	11.1	99.61

Notes: ND = Non-detect.
< Indicates below analytical detection limit or a non-detect in an average.
Results presented are average of all samples.
1. Analysis of As-Dredged Sediment Samples - Table 1A Interim Summary Report
2. Analysis of LWA Product Samples - Table 14 Final Summary Report

and/or destruction efficiency is related to the volatility of the compound as well as to process operating conditions, i.e., time, temperature and turbulence. The measure of the success of the process to achieve decontamination is further seen in the evaluation of the LWA product by the Port Authority of NY/NJ and their conclusion that the LWA product passes environmental testing and is considered non-toxic.

4.0 Analytical Testing Discussion and Results

4.1 Analytical Testing Discussion – Pre-Kiln Processing (Dewatering)

The procedures that were followed during material sampling and laboratory analyses of the as-dredged material, dewatered filter cake and effluent dewatering liquid are described in the report titled "Material Sampling and Analysis Report, Sediment Decontamination Demonstration Project, Stratus Petroleum Facility, Newark, New Jersey" prepared by GZA GeoEnvironmental, Inc., October 2000.

The basis for the material sampling and analytical plan used to characterize the dredged sediment was the "Sampling and Analysis Plan, Sediment Decontamination Demonstration Project" dated November 3, 1999, approved with minor clarification by NJMR on December 8, 1999. The means, methods and techniques employed and applied were in conformance with those specified in the SAP except as discussed below. Quality Assurance/Quality Control (QA/QC) samples, i.e., duplicates, field/equipment rinsate blanks, trip blanks and matrix spike/matrix spike duplicate (MS/MSD) samples were collected and analyzed throughout the sampling program. One sample of as-dredged material, dewatered filter cake and effluent dewatering liquid are being archived by the laboratory for one year.

Severn Trent Laboratories, Inc. (STL), Pittsburgh, PA performed the bulk sediment chemistry analyses. STL is certified by New Jersey (Certification No. 60418) and by New York (Certification No. 10692). Dioxin analyses were performed by STL in West Sacramento, CA. Geotechnics of Pittsburgh, PA performed geotechnical analyses on a subcontract basis. Aqua Survey, Inc., Flemington, NJ performed the toxicity testing on the effluent dewatering liquid.

Representatives of the USEPA and the USACE sampled the as-dredged material and provided the as-dredged samples to GZA personnel for compositing and shipment to the laboratory. The as-dredged samples are identified as AD-01, AD-02 and AD-03. A duplicate sample of the as-dredged material is identified as AD-04. GZA personnel collected the dewatering liquid and solid dewatered filter cake samples. The dewatered effluent liquid samples are identified as DL-01 and Dl-02 with the duplicate sample being DL-04. Similarly, the dewatered filter cake samples are identified as FC-1 and FC-2.

The SAP envisioned that the USACE vessel Gelberman would be used to randomly collect the grab samples of as-dredged material for bulk sediment analyses. Due to scheduling conflicts and equipment requirements, the USACE vessel, Hayward was substituted and used for this purpose.

In reviewing the procedures related to Volatile Organic Compound (VOC) analysis of the as-dredged material, a question was raised about the applicability of the "methanol preservation" requirement to as-dredged material. After consultation with NJDEP personnel, NJMR advised that the methanol preservation technique was applicable to sediment samples. GZA collected all

VOC samples using the NJDEP methanol preservation procedure. Ultimately the VOC analysis was performed on as-dredged sediment not preserved with methanol in order to maintain and obtain appropriate method detection limits. Further explanation for the actual method and technique utilized for the VOC analysis is included in GZA's Material Sampling and Analysis Report.

The issues previously cited relating to the inability to briquette the dewatered filter cake and to Norlite Corporation resulted in the following changes to the SAP. The SAP specified one grab sample to be collected per 500 tons of dewatered filter cake solid generated. Approximately 500 tons of filter cake solid was produced, and therefore, in accordance with the SAP, GZA collected one grab sample plus one duplicate sample of filter cake material versus the three samples originally planned.

The SAP, after modifications requested by NJMR and NJDEP, called for the sampling and analysis of the initial batch of effluent dewatering liquid for contaminants and total suspended solids (TSS). The effluent liquid was to be monitored for TSS periodically during settling until the 30 mg/L TSS target level was achieved. At that time, a sample was to be collected and shipped via expedited delivery, for analysis. This same effluent liquid was to settle for an additional 24-hour period and again sampled and monitored for TSS using a field measuring instrument, a Hach meter. This second sample was to be stored at 4°C pending the results from the first sample. If required, this second sample would be analyzed or if not required, disposed.

In an attempt to recoup lost time that occurred due to the need to resolve the mercury content of the as-dredged material, it was proposed and agreed with NJDEP that the collected dewatering effluent liquid from the initial batch of as-dredged material processed, could be used as dilution water as long as there was no discharge to surface water prior to receipt of the analytical results. Utilizing the effluent liquid storage tanks allowed the SAP to be followed and also allowed a resumption of processing operations. Given the reduced quantity of as-dredged sediment handled, collected effluent liquid from dewatering operations was utilized for dilution and subsequently pumped back onto the barges and disposed with the balance of the as-dredged material at the Newark Bay Confined Disposal Facility ("CDF").

4.2 Analytical Results – Pre-Kiln Processing

4.2.1 As-Dredged Sediment Results

Summaries of the physical and chemical analytical results of the as-dredged material (AD-01 – AD-04) are presented in the following format. Table 1 presents the physical data including: moisture content and percent solids; sieve analysis; USDA classification; total organic carbon (TOC) and total cyanide results. Tables 1A through 1D present the chemical data summaries including: metals; dioxins/furans; organochlorine pesticides, PCB aroclors, herbicides, and PCB congeners; GC/MS volatile organics; and GC/MS semivolatile organics. Only compounds that were detected are listed. The complete data results including analytical narratives are provided in JCI/UPCYCLE's "Interim Summary Report" cited as a Reference Document.

The physical analytical results were generally in conformance with data corresponding to as-dredged material found in the port region. The as-dredged material is classified as silty clay loam and is very fine in nature, e.g., greater than 94% passing through a #200 sieve. One particular finding, most likely attributable to the specific acquisition site for this sediment, i.e., Stratus Petroleum, is the high TOC content, greater than 48000 mg/kg on a dry basis.

Table 1

As-Dredged Sediment Samples
Soils Testing and Miscellaneous Results

	AD-01	AD-02	AD-03	AD-04
Moisture Content (%)	51.3	51.8	53.1	51.2
Percent Solids (%)	48.7	48.2	46.9	48.8
		USCS Summary		
Sieve Sizes (mm)				
Greater Than #4 (Percentage)	0.00	0.18	1.66	0.00
#4 To # 200 (Percentage)	2.65	2.18	3.83	2.77
Finer Than # 200 (Percentage)	97.35	97.64	94.51	97.23
USDA Classification	Silty Clay Loam	Silty Clay Loam	Silty Clay Loam	Silty Clay Loam
Total Organic Carbon (mg/kg) (Dry)	48400	50100	54100	51800
Cyanide, total (mg/kg)	ND	ND	ND	ND

Table 1A

As-Dredged Sediment Samples
Chemical Data Summary - Metals

	MDL	AD-01	AD-02	AD-03	AD-04
Metal (mg/kg)					
Aluminum	1.3	12300	13000	12000	11700
Antimony	0.15	0.50	0.6	0.6	0.5
Arsenic	0.26	13.7	13.6	13.5	13.6
Barium	0.042	114	118	113	110
Beryllium	0.0072	0.8	0.9	0.8	0.8
Cadmium	0.050	2.2	2.2	2.8	2.1
Calcium	3.9	7520	7410	7400	7030
Chromium	0.1	149	149	149	144
Cobalt	0.33	13.3	13.4	12.7	12.9
Copper	0.22	149	149	148	144
Iron	0.90	32300	32400	31000	30900
Lead	0.19	144	146	144	142
Magnesium	2.00	8000	8470	7830	7630
Manganese	0.089	582	589	580	558
Nickel	0.62	36.7	36.7	37.1	36.7
Potassium	50.4	2480	2680	2430	2370
Selenium	0.21	0.77	0.74	0.62	0.80
Silver	0.095	3.3	3.3	3.4	3.1
Sodium	1.5	7690	9620	7730	7340
Thallium	0.39	1.8	1.4	1.4	1.4
Vanadium	0.18	35.5	36.9	34.8	34.6
Zinc	0.31	307	272	267	264
Mercury	0.080	4.6	5.2	5.1	4.8

Table 1A (continued)

As-Dredged Sediment Samples
Chemical Data Summary - Metals

Notes:

1. MDL denotes Method Detection Limit
2. The matrix spike and matrix spike duplicate exceed the 75-125% control limits for antimony, calcium and lead.
3. The serial dilution percent difference exceeded the control limits for beryllium and iron.
4. The duplicate relative percent difference exceeded the control limits for calcium.
5. For matrix spike and matrix spike duplicate aluminum, chromium, copper, iron, magnanese and zinc recoveries were not calculated due to the concentration of analyte in the sample being >4 times the concentration of spike added.
6. All samples analyzed for mercury were over the instrument's calibration range and required dilutions.

Table 1B

As-Dredged Sediment Samples
Chemical Data Summary -Trace Level Organic Compounds

	AD-01	AD-02	AD-03	AD-04
Dioxin/Furan (pg/g)				
2,3,7,8-TCDD	290	160	160	140
Total TCDD	350	230	190	170
1,2,3,7,8-PeCDD	5.7J	5.7J	6.4J	6.0J
Total PeCDD	31	37	12	11
1,2,3,4,7,8-HxCDD	5.6J	5.5J	7.2J	6.2J
1,2,3,6,7,8-HxCDD	27	26	30	27
1,2,3,7,8,9-HxCDD	20	19	43	31
Total HxCDD	260	250	290	260
1,2,3,4,6,7,8-HpCDD	420	420	440	440
Total HpCDD	1100	1100	1100	1000
OCDD	3800	3900	4100	4100
2,3,7,8-TCDF	29 CON	29 CON	29 CON	29 CON
Total TCDF	450	610	230	290
1,2,3,7,8-PeCDF	18	18	19	19
2,3,4,7,8-PeCDF	29	31	31	30
Total PeCDF	330	420	190	240
1,2,3,4,7,8-HxCDF	210	220	220	220
1,2,3,6,7,8-HxCDF	48	46	50	44
2,3,4,6,7,8-HxCDF	20	20	25	19
1,2,3,7,8,9-HxCDF	ND	ND	ND	ND
Total HxCDF	530	570	430	470
1,2,3,4,6,7,8-HpCDF	860	790	830	810
1,2,3,47,8,9-HpCDF	24	25	28	25
Total HpCDF	1100	1100	1100	1100
OCDF	1200	1200	1300	1200

Table 1B (continued)

Notes:

1. J Estimated Result. Result is less than the reporting limit.
2. CON Confirmation analysis.

Table 1C

As-Dredged Sediment Samples
Chemical Data Summary - Organochlorine Pesticides, PCBs and Herbicides

	AD-01	AD-02	AD-03	AD-04
Organochlorine Pesticides (ug/kg)				
alpha-BHC	0.47J	0.36J	0.23J P	1.1J P
beta-BHC	1.7U	1.7U	1.7U	1.3J P
gamma-BHC (Lindane)	2.2P	0.21J P	0.31J P	1.7U
Heptachlor	1.7U	0.63J P	0.69J P	1.0J P
Aldrin	1.7U	1.5J P	1.1J P	3.4P
Heptachlor epoxide	0.23J	1.7U	0.13J	0.16J P
Dieldrin	0.40J	0.29J P	0.50J P	0.52J P
4,4'-DDE	1.2J	0.85J P	1.7P	1.8P
Endrin	1.7U	1.7U	1.7U	0.21J
Endrin ketone	0.21J P	1.7U	1.7U	1.7U
4,4'-DDD	0.55J P	1.7U	2.0P	0.92J P
4,4'-DDT	0.51J P	0.67J	1.7U	1.7U
gamma-Chlordane	0.78J	0.48J P	0.32J P	0.81J P
PCB Congeners (ug/kg)				
BZ-28	19P	14P	24E P	28E P
BZ-52	7.8P	6.3P	7.5P	2.1U
BZ-49	2.0U	2.2P	2.9P	2.1U
BZ-44	7.5	7.8	9.0P	2.1U
BZ-66	2.0U	10	2.0U	2.1U
BZ-101	2.0U	5.8	9.2	2.1U
BZ-87	2.0U	3.2P	6.0P	2.1U
BZ-118	7.6	6.7	9.6	7.8
BZ-153	10.0P	10.0P	13.7P	16.4P
BZ-184	7.3P	8.2P	10.0P	8.7

Table 1C (continued)

	AD-01	AD-02	AD-03	AD-04
BZ-105	3.5P	1.9U	2.0U	3.8P
BZ-138	9	1.9U	2.0U	2.1U
BZ-187	2.3P	2.4P	2.8P	3.8
BZ-183	2.0U	1.9U	2.0U	2.3
BZ-128	2.2P	2.0P	2.8P	2.5P
BZ-156	2.3P	2.0P	2.6P	2.1U
BZ-180	5.7	5.5	6.6P	7.2
BZ-170	3.6	2.8	3.5	4

Notes:

1. Only compounds detected are listed. PCB Aroclor and Herbicide compounds were analyzed for but not detected.
2. U Compound analyzed for but not detected.
3. J Estimated results. Result is less than the reporting limit.
4. E Compound whose concentration exceeded the calibration range of the instrument for this specific analysis.
5. P Indicates a reported value from a GC analysis where there is greater than 25% difference for detected concentrations between GC columns.

Table 1D

As-Dredged Sediment Samples
Chemical Data Summary - GC/MS Volatiles and GC/MS Semivolatiles

	AD-01	AD-02	AD-03	AD-04
Volatiles (ug/kg)				
Acetone	41U	41U	8.5J	9.2J
Methylene chloride	10U	10U	14	18
Semivolatiles (ug/kg)				
Dilution Factor	1	1	5	1
Acenaphthylene	340U	340U	1700U	51J
Anthracene	43J	49J	1700U	47J
Benzo (a) anthracene	120J	130J	110J	150J
Benzo (a) pyrene	110J	110J	100J	150J
Benzo (b) fluoranthene	100J	120J	100J	140J
Benzo (k) fluoranthene	110J	120J	110J	160J
Benzo (ghi) perylene	70J	40J	66J	47J
bis (2-Ethylhexyl) phthalate	1100	1500	910J	1200
Butyl benzyl phthalate	340U	69J	1700U	25J
Chrysene	140J	150J	120J	170J
Dibenz (a,h) anthracene	32J	16J	1700U	330U
Diethyl phthalate	160J	260J	200J	190J
Di-n-butyl phthalate	28000E	11000E	21000E	43000E
Fluoranthene	230J	250J	240J	310J
Indeno (1,2,3-cd) pyrene	87J	57J	73J	64J
Naphthalene	52J	74J	1700U	61J
Phenanthrene	88J	100J	1700U	98J
Pyrene	180J	180J	180J	210J

Table 1D (continued)

	AD-01	AD-02	AD-03	AD-04
Dilution Factor	15	6	10	30
Acenaphthylene	5100U	2100U	3400U	10000U
Anthracene	5100U	2100U	3400U	10000U
Benzo (a) anthracene	5100U	130J	3400U	10000U
Benzo (a) pyrene	5100U	99J	3400U	10000U
Benzo (b) fluoranthene	5100U	100J	3400U	10000U
Benzo (k) fluoranthene	5100U	140J	3400U	10000U
Benzo (ghi) perylene	5100U	78J	3400U	10000U
bis (2-Ethylhexyl) phthalate	980J	1400J	700J	1200J
Chrysene	5100U	150J	3400U	10000U
Dibenz (a,h) anthracene	5100U	2100U	3400U	10000U
Diethyl phthalate	5100U	270J	3400U	10000U
Di-n-butyl phthalate	36000	12000	16000	58000
Fluoranthene	5100U	240J	160J	10000U
Indeno (1,2,3-cd) pyrene	5100U	81J	3400U	10000U
Naphthalene	5100U	2100U	3400U	10000U
Phenanthrene	5100U	2100U	3400U	10000U
Pyrene	5100U	190J	140J	10000U

Notes:

1. Only compounds detected are listed.
2. Due to the concentration of target compounds detected, samples were reanalyzed at higher dilution factors.
3. J Estimated result. Result is less than the reporting limit.
4. U Compound analyzed for but not detected.
5. E Compound concentration exceeded the calibration range of the instrument for the specific analysis.

Most metal concentrations were typical of that found in the region's sediment. However, while being higher than expected, the mercury levels found within the as-dredged sediment, 4.6 to 5.2 mg/kg, were consistent with existing levels previously found, i.e., non-detect to 13 mg/kg. As experienced in other sediment samples from the port, trace levels of organic compounds (dioxins/furans) were detected, albeit in minute concentrations. Similar results were found for some pesticides and PCB congeners, while the PCB aroclor compounds and herbicides analyzed for were not detected.

All GC/MS volatile organic analyses with the exception of acetone and methylene chloride in one sample (AD-03) and the duplicate sample (AD-04) were non-detect. The acetone results were estimated and less than the reporting limit, while the methylene chloride concentrations were slightly above detection. With respect to the GC/MS semivolatile analyses, due to the concentrations of target compounds detected in the as-dredged material, it was decided to reanalyze the samples at higher dilution factors. With the exception of di-n-butyl phthalate that appears to be ubiquitous and a common semivolatile contaminant, regardless of the dilution factor used, any compounds detected had results below their respective reporting limits.

4.2.2 Dewatering Effluent Liquid Results

Two sets of samples of dewatering effluent liquid were collected. The first set of samples (DL-01 and DL-02) was from the initial processing run, having been taken when it was thought that the TSS target had been reached with the second sample (DL-04) being taken after an additional 24-hours allowing the liquid to reach quiescence. While the SAP required the second sample to be analyzed under certain conditions, due to potential conflicts with prescribed methodology holding times, it was decided to proceed with its analyses. The dewatering liquid analytical results are presented and compared to New Jersey Surface Water Quality Standards (SWQS) for Class SE-3 waters in Table 2 – Dewatering Liquid Analytical Results, prepared by GZA GeoEnvironmental, Inc. Table 2 includes the following analytical results: general chemistry, TSS and TOC; GC/MS volatiles; GC/MS semivolatiles; pesticides; and metals. Table 2 reports only those compounds that were detected in the samples. The SE-3 (saline waters in estuaries) classification for Newark Bay was confirmed by NJDEP. The laboratory reported that all coolers containing the dewatering effluent liquid samples were received with their temperatures outside of the proper temperature range.

The effluent dewatering liquid samples collected and tested contained four volatile organic compounds. Acetone, bromodichloromethane, 2-butanone and chloroform were detected at trace levels all below New Jersey SWQS limits. Bis(2-Ethylhexyl) phthalate, the only semivolatile compound found, was detected below the method detection limit and also below its applicable SWQS.

The pesticides dieldrin and 4,4'-DDE were at concentrations above the applicable SWQS values. Dieldrin was detected above the SWQS in the sample collected after the 24-hour waiting period, while 4-4' DDE was detected above the SWQS in all of the samples.

Arsenic, manganese and mercury were detected above the SWQS in all of the samples. Given the discussion previously attributed to mercury in the as-dredged material, the mercury results could be expected.

Table 2
Dewatering Liquid Analytical Results
JCI/Upcycle

Sample ID Lab Sample ID. Sampling Date Dilution Factor	EPA Method	New Jersey SWQS	DL-01 COI010216-001 8/30/00 1		DL-02* (DUP) COI010216-002 8/30/00 1		DL-04 COI020124-001 8/31/00 1		TB COI010216-004 1	
Total Organic Carbon (mg/L)	9060	NS	8.8		8.6		6.5		NA	
Total Suspended Solids (mg/L)	160.2	None	146		143		242		ND	
Volatile Organic Compounds (ug/L)	8260									
Acetone		NS	7.1	J	7.1	J	9.6	J	4.6	J
Bromodichloromethane		22	1.5	J	1.5	J	1.6	J	5.0	U
2-Butanone		NS	6.4	J	8.9	J	9.4	J	3.5	J
Chloroform		470	9.4		9.4		9.8	J	5.0	U
Semi-Volatile Organic Compounds (ug/L)	8270									
bis(2-Ethylhexyl) phthalate		5.92	10.0	U	4.8	J	4.1	J	5.2	J
Pesticides (ug/L)	8081A									
Dieldrin		0.000144	0.050	U	0.050	U	**0.021**	JP	NA	
4,4'-DDE		0.000591	**0.0082**	JP	**0.0039**	JP	**0.015**	J	NA	
Inorganic Metals (ug/L)	6010/7470									
Aluminum		Reserved	4,380		5,150		19,100		NA	
Antimony		4,300	1.5	U	1.5	U	3.1	B	NA	
Arsenic		0.1360	**10.3**		**11.4**		**34.5**	B	NA	
Barium		NS	82.4		86.8		186		NA	
Beryllium		Reserved	0.25		0.28		1.1	B	NA	
Cadmium		NS	0.58		0.71		3.4	B	NA	
Calcium		NS	119,000		122,000		123,000	B	NA	
Chromium		3,230	46.8		55.9		192		NA	
Cobalt		NS	3.2	U	3.2	U	15.3	B	NA	
Copper		Reserved	112		82.9		168		NA	
Iron		Reserved	5,810		7,650		34,800	B	NA	
Lead		NS	44.8		50.8		209		NA	
Magnesium		NS	206,000		208,000		281,000		NA	
Manganese		100	**1,460**		**1,520**		**1,470**		NA	
Mercury		0.146	**0.64**		**0.85**		**2.7**		NA	
Nickel		3,900	13		411		52.5		NA	
Potassium		NS	88,900		8,850		109,000		NA	
Selenium		NS	2.2		2.1	U	4		NA	
Silver		NS	1.6		2.1		5		NA	
Sodium		NS	1,870,000		1,880,000		2,450,000		NA	
Thallium		6.22	5.5		6.5		5.9		NA	
Vanadium		NS	12.4		13.5		52.2		NA	
Zinc		Reserved	281		158		359		NA	

Note: Only compounds detected are listed. Bolded values indicate an exceedance above the SWQS.
SWQS = Surface Water Quality Standards for a SE-3 Waterbody
B = Analyte quantified in blank sample as well as matrix sample
J = Indicates an estimated value below the Method Detection Limit.
P = Greater than 25% difference for detected concentrations between two GC columns (lower value reported).
U = Undetected (number in column is the MDL)
NA = Not applicable or not analyzed.
ND = Not Detected
NS/Reserved = No standard
None = none which would render the waters unsuitable for the designated uses.
ug/L = microgram per liter

Analyses for PCB aroclor compounds, PCB congeners and herbicide compounds were all non-detect. However, trace levels of organic compounds (dioxins/furans) were detected, albeit in minute concentrations. These results are presented in Table 2A.

Comprehensive analyses of the dewatering liquid including laboratory analytical case narratives are provided in the "Interim Summary Report" cited as a Reference Document.

The use of the Hach meter to field determine TSS proved ineffective. Laboratory reported TSS values ranged from 143 to 242 mg/L, (reference Table 2) while the Hach values reported exceeded the instrument limit of 883 mg/L. Visually, the field sample was turbid, but did not evidence a high degree of solids. Given the turbidity of the sample subjected to the field test, it is surmised that the instrument could not accurately distinguish between turbidity and TSS.

4.2.3 Toxicity Results – Dewatering Effluent Liquid

At the request of Scott Douglas, NJMR's Project Manager, a sample of effluent dewatering liquid was collected for toxicity analysis. Sample collection is described in the above referenced report prepared by GZA, and analytical results as determined by Aqua Survey, Inc. are described in their document titled "Biomonitoring Report (Screening Tests), GZA Company" dated October 2, 2000, and appended hereto. Table 3, ASI Biomonitoring Report Test Summary of the 48-hour acute screening tests for *M. bahia* and Table 3A, Summary of Acute Test Results, confirm that the effluent liquid is not toxic.

4.2.4 Dewatered Filter Cake Results

The summary analytical results for the dewatered filter cake (FC-1 and FC-2) are presented in Tables 4 through 4D in similar fashion as above with only those compounds being detected listed. Included are results for: analytical results for moisture content and percent solids, sieve analysis, USDA classification and Total Organic Carbon (Table 4); metals and TCLP metals (Table 4A); trace level organic compounds, i.e., dioxins/furans (Table 4B); pesticides and PCB congeners (Table 4C) and GC/MS semivolatiles (Table 4D). The laboratory reported that all coolers containing the dewatering effluent liquid samples were received with their temperatures outside of the proper temperature range. The complete data results for the dewatered filter cake including analytical narratives are provided in the "Interim Summary Report" cited as a Reference Document.

GC/MS volatiles, PCB aroclors, and herbicides were analyzed but not detected. Analyses for TCLP volatiles were all non-detect and TCLP metals results indicate no contravention or exceedance of established limits.

The physical nature of the dewatered filter cake is of a silt loam classification and very fine in size with greater than 98% passing through a #200 sieve. The total organic carbon content of the filter cake, greater than 82000 mg/kg on a dry basis, is higher than that detected in the as-dredged sediment. This increase in value could be attributable to a concentration effect that occured during the mechanical filter press phase of the dewatering process.

Most metal concentrations are within the range encountered in this region's sediment. The mercury concentration of 3.8 mg/kg is less than that found in the as-dredged material, higher than expected, but still within the range of mercury seen in the port's sediment. Trace levels of organic compounds (dioxins/furans) were detected but at extremely minute levels. Similar

Table 2A

Dewatering Effluent Liquid Samples
Chemical Data Summary - Trace Level Organic Compounds

	DL-01	DL-02	DL-04
Dioxin/Furan (pg/L)			
2,3,7,8-TCDD	58	58	130
Total TCDD	110	120	150
1,2,3,7,8-PeCDD	ND	ND	ND
Total PeCDD	ND	ND	ND
1,2,3,4,7,8-HxCDD	ND	ND	ND
1,2,3,6,7,8-HxCDD	ND	ND	ND
1,2,3,7,8,9-HxCDD	ND	ND	ND
Total HxCDD	100	220	J92
1,2,3,4,6,7,8-HpCDD	370	330	320
Total HpCDD	830	1300	710
OCDD	4200	3300	3400
2,3,7,8-TCDF	ND	15 CON	15 CON
Total TCDF	300	300	290
1,2,3,7,8-PeCDF	ND	ND	ND
2,3,4,7,8-PeCDF	ND	ND	ND
Total PeCDF	190	170	190
1,2,3,4,7,8-HxCDF	160	120	130
1,2,3,6,7,8-HxCDF	43J	26J	37J
2,3,4,6,7,8-HxCDF	ND	ND	ND
1,2,3,7,8,9-HxCDF	ND	ND	ND
Total HxCDF	370	300	330
1,2,3,4,6,7,8-HpCDF	780	530	650
1,2,3,47,8,9-HpCDF	ND	ND	ND
Total HpCDF	930	640	770
OCDF	920	620	620

Table 2A (continued)

Notes:

1. ND Non-detect
2. J Estimated Result. Result is less than the reporting limit.
3. CON Confirmation analysis.

Table 3

ASI BIOMONITORING REPORT

TEST SUMMARY

CLIENT: GZA Geo Enviromental
65 Willowbrook Road
Wayne, NJ 07470

TYPE OF TESTS: 48-hour Acute Screening Tests

DATES OF TESTS: Quench Water - September 5-7, 2000

SPECIES: *M. bahia*

SUMMARY OF RESULTS: Percent Survival

Concentration	Percent Survival
Control	100%
100% Quench Water	95%

Certification:

Accuracy of report certified by:

Thomas J. Dolce 10/2/00

Thomas J. Dolce
Laboratory Manager

Date

GZA: 20-368

499 Point Breeze Road / Flemington, NJ 08822
Phone: 908/788-8700 Fax: 908/788-9165 E-mail: aquasurvey@aol.com Web Site: www.aquasurvey.com

Table 3A

AQUA SURVEY, INC.

MEMORANDUM BY FAX

SUMMARY OF ACUTE TEST RESULTS

TO: Mr. Brian Dagostino/ Ms. Mindy Sayres	FROM: Thomas J. Dolce
CLIENT: GZA Geo Environmental	LOCATION:
OUTFALL:	FAX #:(973) 256-9339
REPORT #: 2368	JOB #: 20-368
TEST DATES (S): 9/5-7/00	TEST TYPE: 96 Hour SDR

	SPECIES	CONTROL MORTALITY	MORTALITY IN 100% EFFLUENT	LC_{50}
FRESHWATER	*C. dubia*			
	P. promelas			
SALTWATER	*C. variegatus*			
	M. bahia	Zero	5%	>100%

COMMENTS:

To discuss your data package please call Thomas J. Dolce at (908) 788-8700.

This service is provided free of charge as part of ASI's continuing commitment to provide high quality service oriented bioassay testing.

Table 4

Dewatered Filter Cake Samples
Soils Testing and Miscellaneous Results

	FC-1	FC-2
Moisture Content (%)	61.1	63.7
Percent Solids (%)	38.9	36.3
	USCS Summary	
Sieve Sizes (mm)		
Greater Than #4 (Percentage)	0.00	0.04
#4 To # 200 (Percentage)	1.04	1.12
Finer Than # 200 (Percentage)	98.96	98.84
USDA Classification	Silt Loam	Silt Loam
Total Organic Carbon (mg/kg) (Dry)	83000	82600

Table 4A

Dewatered Filter Cake Samples
Chemical Data Summary -Trace Level Organic Compounds

	FC-1	FC-2
Dioxin/Furan (pg/g)		
2,3,7,8-TCDD	170	160
Total TCDD	280	250
1,2,3,7,8-PeCDD	ND	ND
Total PeCDD	15	15
1,2,3,4,7,8-HxCDD	ND	ND
1,2,3,6,7,8-HxCDD	29	28
1,2,3,7,8,9-HxCDD	16 J	15 J
Total HxCDD	260	250
1,2,3,4,6,7,8-HpCDD	800	480
Total HpCDD	1700	1200
OCDD	5900	4800
2,3,7,8-TCDF	22 CON	23 CON
Total TCDF	790	670
1,2,3,7,8-PeCDF	21 J	22 J
2,3,4,7,8-PeCDF	36	37
Total PeCDF	540	520
1,2,3,4,7,8-HxCDF	210	220
1,2,3,6,7,8-HxCDF	54	55
2,3,4,6,7,8-HxCDF	18 J	20 J
1,2,3,7,8,9-HxCDF	ND	ND
Total HxCDF	630	630
1,2,3,4,6,7,8-HpCDF	810	880
1,2,3,47,8,9-HpCDF	52	27 J
Total HpCDF	1200	1200
OCDF	1700	1400

Table 4A (continued)

Notes:

1. ND Not detected.
2. J Estimated Result. Result is less than the reporting limit.
3. CON Confirmation analysis.

Table 4B

Dewatered Filter Cake Samples
Chemical Data Summary - Metals and TCLP Metals

	MDL	FC-1	MDL	FC-2
Metal (mg/kg)				
Aluminum	1.7	15700	1.8	16000
Antimony	0.20	1.3 B N	0.20	1.1 B N
Arsenic	0.35	18.2	0.35	17.6
Barium	0.057	122	0.057	124
Beryllium	0.0097	1.0	0.0098	1.0
Cadmium	0.067	3.2	0.068	3.2
Calcium	5.2	6950	5.2	3800
Chromium	0.14	183	0.14	176
Cobalt	0.44	15.4	0.44	15.0
Copper	0.30	177	0.30	178
Iron	1.2	40900	1.2	40400
Lead	0.26	190 N	0.26	180 N
Magnesium	2.7	9230	2.7	9200
Manganese	0.12	701	0.12	691
Nickel	0.84	43.5	0.84	42.1
Potassium	67.8	2970 N	68.2	3040 N
Selenium	0.29	0.36B	0.29	1.0
Silver	0.13	4.2	0.13	4.0
Sodium	2.0	7940	2.0	7820
Thallium	0.53	0.91 B	0.53	0.61 B
Vanadium	0.24	42.2	0.25	42.1
Zinc	0.42	321	0.42	315
Mercury	0.021	3.8	0.021	3.8

Table 4B (continued)

	Reporting Limit	FC-1	Reporting Limit	FC-2
TCLP Metal (mg/L)				
Arsenic	0.50	0.19 B	0.50	0.17B
Barium	10.0	0.11 B	10.0	0.12 B
Cadmium	0.10	0.013B	0.10	0.013 B
Chromium	0.50	0.0038 U	0.50	0.0044 B
Lead	0.50	0.028 B	0.50	0.025 U
Selenium	0.25	0.067 U	0.25	0.067 U
Silver	0.50	0.0031 U	0.50	0.0031 U
Mercury	0.00020	0.000059 B	0.00020	0.000045 B

Notes:

1. MDL Method Detection Limit
2. B Result is between MDL and reporting limit
3. U Result is less than the MDL
4. N Matrix spike and matrix spike duplicate were outside of the control limits.

Table 4C

Dewatered Filter Cake Samples
Chemical Data Summary - Organochlorine Pesticides and PCB Congeners

	FC-1	FC-2
Organochlorine Pesticides (ug/kg)		
gamma-BHC (Lindane)	0.19 J P	0.25 J P
4,4'-DDE	0.86 J P	1.1 J P
4,4'-DDD	2.3 U	0.71 J P
4,4'-DDT	2.3 U	0.96 J P
PCB Congeners (ug/kg)		
BZ-8	3.6	4.7
BZ-18	4.0 P	4.1 P
BZ-28	15	18
BZ-52	12 P	14 P
BZ-49	8.5	9.2
BZ-44	7.0 P	8.9 P
BZ-66	11P	14 P
BZ-101	11	11
BZ-87	4.0 P	3.5 P
BZ-77	2.7 U	25
BZ-118	6.9	8.1
BZ-153	10	11P
BZ-184	7.4 P	9.1 P
BZ-105	3.0 P	4.0 P
BZ-138	2.7 U	9.1
BZ-128	2.7 U	2.7 P
BZ-156	2.8	3.1
BZ-180	5.3	5.8
BZ-170	3.3 P	3.3 P

Table 4C (continued)

Notes:

1. Only compounds detected are listed. PCB Aroclor and Herbicide compounds were analyzed for but not detected.
2. U Compound analyzed for but not detected.
3. J Estimated results. Result is less than the reporting limit.
4. P Indicates a reported value from a GC analysis where there is greater than 25% difference for detected concentrations between GC columns.

Table 4D

Dewatered Filter Cake Samples
Chemical Data Summary - CG/MS Semivolatiles

	FC-1	FC-2
Dilution Factor	1	1
Compound (ug/kg)		
Anthracene	34 J	40 J
Benzo (a) anthracene	130 J	130 J
Benzo (a) pyrene	96 J	100 J
Benzo (b) fluoranthene	75 J	95 J
Benzo (k) fluoranthene	63 J	72 J
Benzo (ghi) perylene	40 J	35 J
bis (2-Ethylhexyl) phthalate	310 J	340 J
Chrysene	120 J	150 J
Di-n-butyl phthalate	300 J	290 J
Fluoranthene	180 J	230 J
Indeno (1,2,3-cd) pyrene	41 J	35 J
Naphthalene	460 U	57 J
Phenanthrene	57 J	40 J
Pyrene	150 J	150 J

Notes:

1. Only compounds detected are listed.
2. J Estimated result. Result is less than the reporting limit.
3. U Compound analyzed for but not detected.

results were found for four organochlorine pesticides (Lindane, 4,4'-DDE, 4,4'-DDD and 4,4'-DDT) as well as for the PCB congeners.

With respect to GC/MS semivolatile analyses, several compounds were detected with the results being estimated and below applicable reporting limits.

4.3 Data Validation Assessment – Pre-Kiln Processing

An integral part of the approved Sampling and Analysis Plan ("SAP") component of the overall Work Plan is the assurance of representative analytical data. As part of the SAP, the New Jersey Institute of Technology's Center for Environmental Engineering and Science provided independent data validation services. Gerard McKenna of NJIT-CEES served as principal reviewer with expert consulting assistance from William E. Sherman. The scope of the data validation services undertaken by NJIT-CEES included: 1) review of background documents including sampling work plans, QA/QC plans, analytical methodologies used, and federal/state data quality evaluation guidelines; 2) review of analytical results and all supportive documentation provided by the sub-contractor analytical laboratories; 3) data assessment; and 4) summary evaluation report. NJIT-CEES received data and accompanying documentation associated with the dewatering and processing operations performed at Stratus Petroleum. Specifically, sample results from the as-dredged material, the dewatered filter cake and the effluent liquid from these operations.

Mr. McKenna, writing for NJIT-CEES, concluded, that based on their reviews, the analytical data was found to have been generated in an acceptable manner. NJIT-CEES found that the laboratories used appropriate methodologies and analyzed the samples under acceptable conditions as shown by the laboratories Internal Quality Control Case Narratives.

With respect to the effluent liquid and dewatered filter cake samples, it was noted that these samples were received in coolers by the laboratory, however, these samples were "outside the proper temperature range, i.e., 4°C." Without further explanation for this deviation, Mr. McKenna concluded that if these samples were not exposed to any unusual conditions between sample collection and laboratory receipt, it would then seem likely that they represented the actual condition of the dewatered effluent liquid and dewatered filter cake.

NJIT's complete report is included in the Appendix attached hereto.

4.4 Analytical Testing Discussion – Rotary Kiln Processing Emission Measurements

The general basis for the emissions testing, process sampling and analytical plan used in the pilot rotary kiln program was established in a document titled "Sampling and Analysis Plan, Sediment Decontamination Demonstration Project" dated November 3, 1999, approved with minor clarification by NJMR on December 8, 1999.

The emission sampling, analyses and characterization test program was designed to provide information to assess potential environmental impacts from the use of dredged materials in the manufacture of lightweight aggregate. Emissions testing was performed for the hammermill dryer/grinder system at the outlet to the baghouse collector and for the pilot rotary kiln system at the inlet and outlet of the emissions control equipment serving the rotary kiln. An overview of the test program is provided in Tables 5 and 6.

Table 5

Test Program Overview for Air Emissions Sampling

(Source: FAC)

Test Program Overview for Air Emissions Sampling: JCI/Upcycle

Process Stream (s)	Sampling Method(s)	Pollutant(s) Sampled	Analytical Method	No of Runs	Run Duration
Hammermill Grinder Dryer	EPA Method 6C[1]	Sulfur Dioxide (SO_2)	EPA Method 6C[1]	2	167.4 and 180 minutes[7]
	EPA Method 7E[1]	Nitrogen Oxides (NO_x)	EPA Method 7E[1]	2	
	EPA Method 10[1]	Carbon Monoxide (CO)	EPA Method 10[1]	2	
	EPA Method 25A[1]	Total Hydrocarbons (THC)	EPA Method 25A[1]	2	
	EPA Method 23[1]	Dioxins/Furans	EPA Method 8290[6]	2	
	EPA Method 5[1][3] EPA Method 101A[2][3]	Particulate Mercury	EPA Method 5[1] EPA Method 101A[2]	2	118 and 120 minutes[7]
Rotary Kiln Exit APC Inlet and Outlet[4]	EPA Method 6C[1]	Sulfur Dioxide (SO_2)	EPA Method 6C[1]	3	60 minutes
	EPA Method 7E[1]	Nitrogen Oxides (NO_x)	EPA Method 7E[1]	3	60 minutes
	EPA Method 10[1]	Carbon Monoxide (CO)	EPA Method 10[1]	3	60 minutes
	EPA Method 25A[1]	Total Hydrocarbons (THC)	EPA Method 25A[1]	3	60 minutes
	EPA Method 5[1] (New Jersey Method 1[5]) EPA Method 202	Particulate Condensible Particulate	EPA Method 5[1] (New Jersey Method 1[5]) EPA Method 202	3	60 minutes
	EPA Method 23[1]	Dioxins/Furans Semivolatile Organics PCB's	EPA Method 23[1] EPA Method 8270[6] EPA Method 8082[6]	3	180 minutes
	Modified EPA Method 23[1]	Total Chromatographable Semivolatile Organics	EPA Method 600/R36/036[6]	3	180 minutes
	EPA Method 29[1]	Multiple Metals	EPA Method 29[1]	3	120 minutes
	EPA Method 0030[6]	Volatile Organics	EPA Method 8260[6]	3	40 minutes
	EPA Method 0040[6]	Volatile Organics	EPA Method 18[1]	3	60 minutes
	EPA Method 0050[6]	Hydrogen Chloride (HCl) Hydrogen Bromide (HBr) Hydrogen Fluoride (HF) Chlorine (Cl_2) Ammonia (NH_3)	EPA Method 0050[6]	3	120 minutes
	EPA Method 0061[6]	Hexavalent Chromium	EPA Method 0061[6]	3	120 minutes

Notes:

(1) From 40 CFR 60, Appendix A.
(2) From 40 CFR 61, Appendix B.
(3) EPA Methods 5 was performed in conjunction with EPA Method 101A using a combined sampling train (see discussion Section 4.1.6)
(4) With the exception of EPA Methods 6C, 7E, 10, and 25A, the rotary kiln exit (scrubber inlet) and scrubber outlet were tested simultaneously)
(5) From New Jersey Technical Manual 1004, *Guidelines for Compliance Stack Emission Test Programs, July 2000*
(6) From *Test Methods for Evaluating Solid Waste, Physical/Chemical Methods* (EPA SW-846).
(7) The first sampling run at the hammermill baghouse outlet was abbreviated because of a process upset (see discussion Section 3.2.1)
(8) From EPA *Methods for Chemical Analysis of Water and Wastes.*

Table 6

Test Program Overview for Process Materials Sampling

(Source: FAC)

Process Materials Sampling Overview: JCI/Upcycle				
Sample Type	**Analyte(s)**	**Sample Analysis Method**	**Sample Frequency**	**Number of Samples Analyzed [3]**
Fuel Oil	Halogens (Chlorine, Bromine, Fluorine)	EPA Method 300.0[1]	1 per entire test program	2 samples: grab sample and duplicate
Shale	Metals (Excluding Mercury)	EPA Method 6010B[2]	1 per entire test program	2 samples: grab sample and duplicate
	Mercury	EPA Method 7471[2]		
	Halogens (Chlorine, Bromine, Fluorine)	EPA Method 300.0[1]		
	Total Organic Carbon	See Section 4.2.2.11		
Feed Pellets	Metals (Excluding Mercury)	EPA Method 6010B[2]	60 min	4 samples: 1) composite of first test day 2) composite of second test day 3) composite of samples 1 and 2 4) duplicate of 2
	Mercury	EPA Method 7471[2]		
	Halogens (Chlorine, Bromine, Fluorine)	EPA Method 300.0[1]		
	PCDD/PCDF	EPA Method 8290[2]		
	Herbicides	EPA Method 8150[2]		
	Pesticides	EPA Methods 3550B[2] and 8081[2]		
	PCBs	EPA Methods 3550B[2] and 8082[2]		
	Volatile Organic Compounds	EPA Method 8260[2]		
	Semivolatile Organic Compounds	EPA Method 8270[2]		
	TCLP Volatiles	EPA Method 8260[2]		
	TCLP Semivolatiles	EPA Method 8270[2]		
Ceramic Filter Catch	Metals (Excluding Mercury)	EPA Method 6010B[2]	180 min	3 samples: 1) composite of first test day 2) composite of second test day 3) composite of samples 1 and 2
	Mercury	EPA Method 7471[2]		
	Total Organic Carbon	See Section 4.2.2.11		
	PCDD/PCDF	EPA Method 8290[2]		
	Herbicides	EPA Method 8150[2]		
	Pesticides	EPA Methods 3550B[2] and 8081[2]		
	PCBs	EPA Methods 3550B[2] and 8082[2]		
	Volatile Organic Compounds	EPA Method 8260[2]		
	Semivolatile Organic Compounds	EPA Method 8270[2]		
	TCLP Volatiles	EPA Method 8260[2]		
	TCLP Semivolatiles	EPA Method 8270[2]		

Process Materials Sampling Overview: JCI/Upcycle				
Sample Type	**Analyte(s)**	**Sample Analysis Method**	**Sample Frequency**	**Number of Samples Analyzed [3]**
Aggregate Product	Metals (Excluding Mercury)	EPA Method 6010B[2]	30 min	3 samples: 1) composite of first test day 2) composite of second test day 3) composite of samples 1 and 2 4) duplicate of 2
	Mercury	EPA Method 7471[2]		
	Halogens (Chlorine, Bromine, Fluorine)	EPA Method 300.0[1]		
	PCDD/PCDF	EPA Method 8290[2]		
	Herbicides	EPA Method 8150[2]		
	Pesticides	EPA Methods 3550B[2] and 8081[2]		
	PCBs	EPA Methods 3550B[2] and 8082[2]		
	Volatile Organic Compounds	EPA Method 8260[2]		
	Semivolatile Organic Compounds	EPA Method 8270[2]		
	TCLP Volatiles	EPA Method 8260[2]		
	TCLP Semivolatiles	EPA Method 8270[2]		
	TCLP Metals (Excluding Mercury)	EPA Method 6010B[2]		
	TCLP Mercury	EPA Method 7471[2]		
	MEP Metals (Excluding Mercury)	EPA Method 6010B[2]		
	MEP Mercury	EPA Method 7471[2]		
Scrubber Makeup Water	Metals (Excluding Mercury)	EPA Method 6010B[2]	1 per entire test program	2 samples: grab sample and duplicate
	Mercury	EPA Method 7471[2]		
	Total Halogens	EPA Method 300.0[1]		
Scrubber Liquor	Metals (Excluding Mercury)	EPA Method 6010B[2]	240 min	4 grab samples at: 1) test beginning 2) test midpoint 3) test end 4) duplicate of 3
	Mercury	EPA Method 7471[2]		
	Total Halogens	EPA Method 300.0[1]		

[1]From EPA *Methods for Chemical Analysis of Water and Wastes.*
[2]From EPA *Test Methods for Evaluating Solid Waste, Physical/Chemical Methods* (EPA SW-846).
[3]Detailed breakdown of sample collection and analyses is presented in Section 4.3.2.1.

The procedures that were followed during emission sampling, process sample acquisition and subsequent laboratory analyses of the samples including applicable quality objectives and criteria are described in a document titled "Quality Assurance Project Plan ("QAPP"), Revision No.1, prepared by Fuller Air Compliance ("FAC"). This latest version of the QAPP, Revision 1, addresses comments made by Dr. Huan Feng of the WRDA/Brookhaven National Laboratory team.

FAC was responsible for performing all gas emission measurements to be used for reporting purposes as well as those to be used to project emissions for a commercial scale LWA facility. FFE Minerals performed gas emission measurements for the sole purpose of developing emission profiles over the entire operating program. FFE Minerals was responsible for acquiring all process related samples and in turn providing these samples to FAC for chain-of-custody procedures and subsequent laboratory analysis. Under subcontract to FAC, Triangle Laboratories, Inc. was responsible for gaseous emissions analyses including PCDD/PCDF, PCB, semivolatile, and VOST. York Analytical Laboratories, Inc. was responsible for process related sample analyses including metals, pesticides, herbicides, volatiles, TCLP volatiles, BNA, MEP metals, and TCLP metals analyses. Philip Analytical Services, Inc. under subcontract to York Analytical Laboratories performed total extractable chromatographable organics and gravimetric organics analyses as well as hexavalent chromium, TOC and related halogen and ammonia analyses.

4.5 Analytical Testing Discussion – Lightweight Aggregate Product

As was the case for the emission measurements and process samples, the general basis for the testing and characterization of the LWA product was established in the Sampling and Analysis Plan document referenced above.

Specifically, the LWA product was subjected to both physical and geotechnical testing to provide information relative to the conformance of the aggregate product to established specifications. FFE Minerals crushed and sized (vibrating screen and jaw crusher circuit) a sample of the kiln product to obtain a gradation meeting ASTM specifications for ¾" x No. 4 aggregate.

Physical analysis of this aggregate sample was performed by SOR Testing Laboratories, Inc., of Cedar Grove, NJ. The aggregate sample submitted to SOR was tested for a series of properties as specified in ASTM C330, Standard Specification for Lightweight Aggregates for Structural Concrete. A summary of this testing is provided in Table 7. Geotechnical testing of the aggregate was conducted by STS Consultants, Ltd., of Vernon Hills, IL. Geotechnical testing of the product is used to determine the acceptability and suitability of the aggregate for lightweight fill applications. A summary of the tests performed by STS Consultants is provided in Table 8.

Additionally, for information purposes, the Port Authority of New York & New Jersey, the New York State Department of Transportation and the State of New Jersey Department of Transportation conducted physical material evaluations of the product. Details of these evaluations are presented in later sections of this report and these agencies reports are provided in the Appendix.

4.6 Analytical Results – Rotary Kiln Processing Emissions and Process Samples

Table 7

Test Program Overview
LWA Product Physical Analysis

Analyses to be Performed	Test Methodology
Gradation	ASTM C-136
Unit Weight	ASTM C-29
Organic Impurities	ASTM C-40
Staining and Iron Content	ASTM C-641
Clay Friables	ASTM C-142
Loss on Ignition	ASTM C-114
Drying Shrinkage	ASTM C-157
Pop-outs	ASTM C-151
Freezing and Thawing	ASTM C-67
Thermal Conductivity	ASTM C-177

Note: The scope of work for the lightweight aggregate physical analysis will conform to the requirements for "Aggregate Characteristic Tests for Use in Concrete" under ASTM C-330.

Table 8

Test Program Overview
LWA Product Geotechnical Analysis

Analyses to be Performed	No. of Samples	Test Methodology
Particle Size	22	ASTM C-117 and C-136
Moisture Density Relationship of Soils	1 Standard Proctor	ASTM D-698
Minimum Index Density of Soils	1	ASTM D-4254
Maximum Density of Soils	1	ASTM D-4253
Consolidated Drained Triaxial Test	8 Consolidated Stresses	USACE EM1110-2-1906 App. X
Direct Shear Test	8 Normal Stresses	ASTM D-3080

No major problems were encountered in the execution of the testing program. With the exceptions discussed below, all testing was conducted in accordance with the QAPP prepared by FAC for the test program.

The hammermill dryer/grinder came off-line due to stoppage of the hammermill rotor with 2 minutes left in the first mercury and particulate sampling run and with 12.6 minutes left in the first PCDD/PCDF sampling run. Since the testing in each of these runs was essentially complete (118 out of 120 minutes and 164.7 out of 180 minutes, respectively), the decision was made to consider these slightly abbreviated runs as valid rather than to restart the run after the process came back on line.

All isokinetic sampling at the hammermill dryer/grinder baghouse outlet was conducted at a single point of average velocity. This differs from the procedures outlined in the QAPP that proposed traversing the isokinetic sampling train at twelve points (six in each of two ports) in accordance with EPA Method 1. This deviation was made for two reasons. First, one of the sampling ports at each of the two test locations was obstructed by the location of the baghouse being directly behind the sampling ports. Second, the available temporary scaffolding and lack of a monorail attachment did not allow the sampling train to be supported during a traverse.

Data review for testing at the hammermill dryer/grinder baghouse outlet detected appreciable mercury in the reagent blanks. When the results for the mercury emissions from this source were corrected for the apparent blank contamination, the emissions were not detected or were detected at a very low level.

The post-leak check failed for the first PCDD/PCDF sampling run conducted at the kiln scrubber outlet. Subsequently, this run was voided and an additional sampling run was conducted at both the inlet and outlet sampling locations for the kiln system. Therefore, the data reported for PCDD/PCDF are from the second, third and fourth sampling runs.

The second sampling run for SO_2, NOx, CO and VOC at both the kiln scrubber inlet and outlet was voided due to the monitor reading above the span of the analyzer. Only O_2 and CO_2 data were used from this run due to the potential for a process upset. Similarly, data from the third sampling run at these locations for the same parameters was lost due to equipment malfunction that prevented the downloading of the CEM data from the datalogger to the CEM computer. Data for these runs were collected for SO_2, NOx, CO and VOC at the kiln scrubber outlet and for O_2 and CO_2 at the kiln scrubber inlet. Subsequently, two additional 60-minute runs were conducted and the data from runs one, four and five are reported.

The loss of the O_2 and CO_2 data affected the determination of the gas molecular weight used to calculate flow for concurrent particulate and EPA Method 0500 (HCl, HBr, HF, Cl_2 and NH_3) sampling runs. Since the O_2 and CO_2 concentrations were nearly constant throughout the test program, data for the lost runs was taken from the average of valid O_2 and CO_2 test runs immediately before and after the data were lost.

The fourth PCDD/PCDF sampling run on the kiln system was interrupted due to a power loss to the 110-volt electrical circuit at the kiln. Power was restored and sampling resumed after the kiln had stabilized.

Duplicate analyses were not performed on the ceramic filter collector catch samples as originally stated in the QAPP. Notwithstanding that the entire ceramic filter catch was collected for the process samples, the sample volume was insufficient to conduct duplicate analyses.

The EPA Method 0300 and process sample results for methylene chloride, toluene, and chloroform may be the result of field or laboratory contamination. Both methylene chloride and toluene were present in the EPA Method 0300 blank (the EPA Method 0300 analyses did not include chloroform) and were found in higher quantities at the outlet than at the inlet sampling location. These solvents were used in the field and at the analytical laboratory.

FAC cannot be sure at what point the suspected contamination may have occurred. Measures were taken in the field to prevent solvent contamination. The EPA Method 0300 samples were recovered in a separate trailer and were kept in separate coolers from other samples to prevent this from occurring. Also, the process samples were handled by Fuller personnel and kept completely separate from the emissions testing samples, some of which contained methylene chloride and toluene.

However, contamination with laboratory solvents is common and difficult to trace in the air sampling industry, given that contaminants are detected and measured at the microgram level and gallons of these reagents are used in sampling and analysis. In any event, the methylene chloride, toluene, and chloroform results should be considered suspect for this sampling program.

The scrubber liquor samples initially showed a decrease in mercury concentration over time. This was contrary to what was expected to occur, namely an increase in mercury concentration due to the condensation and capture of mercury in the wet scrubber. These initial analytical results were questioned and re-analyses performed. Investigation determined that the caustic solution used as the recirculating liquid in the wet scrubber for neutralization, was in fact, neutralizing the acid used to digest precipitate within the samples prior to analysis. The precipitate apparently contained mercury that was not dissolved into solution prior to the first analysis. During the re-analyses, additional acid was added to the samples to overcome the effect of the caustic and to dissolve the precipitate within the samples. The results presented are those resulting from the re-analyses.

4.6.1 Emission Results

Table 9 presents an overall summary of the analytical results of the gaseous sampling conducted at the outlet of the hammermill dryer/grinder baghouse and at the inlet and outlet of the scrubber for the rotary kiln system. The comprehensive analytical data package including all results and laboratory case narratives is presented in a detailed report titled "Report for Air Emissions Testing and Process Materials Sampling", Volumes 1 and 2, dated June 15, 2001, prepared by FAC and is cited as a Reference Document. Summary data from the report is included in the Appendix.

The reported CO emission rate from the hammermill dryer/grinder exhaust is 0.29 lb/hr (54.7 ppmdv) that is an average of the two sampling runs. The first sampling run showed a high CO concentration in the hammermill dryer/grinder off-gas (approximately 100 ppmdv). Several successful adjustments were made to the air heater burner to reduce these high CO concentrations to a level averaging 10 ppmdv. This reduction was achieved by adjusting air distribution to the air heater burner to improve combustion conditions in the primary burning

Table 9

Overall Summary of Air Emission Results

(Source: FAC)

OVERALL SUMMARY OF ANALYTICAL RESULTS
FROM JCI/UPCYCLE TEST PROGRAM

Pollutant	Reporting Units	Hammermill Dryer Outlet	Kiln Scrubber Inlet	Kiln Scrubber Outlet
Instrumental Monitoring System Analytes via EPA Methods 6C, 7E, 10 and 25A				
Sulfur dioxide (SO_2)	lb/hr	* 0.02	0.21	9.33×10^{-4}
Nitrogen oxides (NO_x) as NO_2	lb/hr	0.04	0.18	1.99×10^{-1}
Carbon monoxide (CO)	lb/hr	0.29	0.25	2.07×10^{-2}
Non Methane Volatile Organic Compounds (NMVOC) as propane	lb/hr	NA	0.014	2.99×10^{-3}
Volatile Organic Compounds (VOC) as propane	lb/hr	0.19	NA	NA
Total Particulate Material via EPA Method 5 (Hammermill) and NJ Method 1/EPA Method 202 (Kiln)				
Total Particulate Material (PM)	lb/hr	0.14	0.18	0.0142
PCDD/PCDF, SVOC (Analytical Method 8270), and PCB via EPA Method 23				
Polychlorinated dibenzo-p-dioxins (PCDD)	lbTEQ/hr	1.03×10^{-12}	2.02×10^{-9}	7.29×10^{-12}
Polychlorinated dibenzofurans (PCDF)	lbTEQ/hr	2.11×10^{-11}	3.32×10^{-9}	2.51×10^{-11}
Semi-volatile organic compounds (SVOC)	—	NA	see Table 3-10	see Table 3-11
Total mono-chlorinated biphenyls	lb/hr	NA	1.23×10^{-7}	1.31×10^{-9}
Total di-chlorinated biphenyls	lb/hr	NA	2.17×10^{-7}	8.18×10^{-9}
Total tri-chlorinated biphenyls	lb/hr	NA	5.15×10^{-7}	9.65×10^{-9}
Total tetra-chlorinated biphenyls	lb/hr	NA	1.55×10^{-6}	1.14×10^{-8}
Total penta-chlorinated biphenyls	lb/hr	NA	9.36×10^{-7}	1.35×10^{-8}
Total hexa-chlorinated biphenyls	lb/hr	NA	4.37×10^{-7}	5.24×10^{-9}
Total hepta-chlorinated biphenyls	lb/hr	NA	2.03×10^{-7}	1.50×10^{-9}
Total octa-chlorinated biphenyls	lb/hr	NA	2.93×10^{-8}	1.38×10^{-10}
Total nona-chlorinated biphenyls	lb/hr	NA	2.34×10^{-8}	1.08×10^{-9}
Deca-chlorinated biphenyl	lb/hr	NA	8.40×10^{-9}	3.36×10^{-10}
Metals via EPA Method 29				
Aluminum (Al)	lb/hr	NA	2.15×10^{-3}	3.06×10^{-5}
Antimony (Sb)	lb/hr	NA	3.37×10^{-6}	3.73×10^{-7}
Arsenic (As)	lb/hr	NA	3.21×10^{-5}	1.31×10^{-6}
Barium (Ba)	lb/hr	NA	2.11×10^{-5}	9.11×10^{-7}

OVERALL SUMMARY OF ANALYTICAL RESULTS
FROM JCI/UPCYCLE TEST PROGRAM (continued)

Analyte(s)	Reporting Units	Hammermill Dryer Outlet	Kiln Scrubber Inlet	Kiln Scrubber Outlet
Metals via EPA Method 29 (continued)				
Beryllium (Be)	lb/hr	NA	$< 4.24 \times 10^{-7}$	$< 4.62 \times 10^{-8}$
Cadmium (Cd)	lb/hr	NA	4.41×10^{-5}	8.88×10^{-6}
Calcium (Ca)	lb/hr	NA	2.00×10^{-3}	1.02×10^{-4}
Chromium (Cr)	lb/hr	NA	7.25×10^{-5}	3.53×10^{-6}
Cobalt (Co)	lb/hr	NA	$< 4.24 \times 10^{-6}$	$< 4.15 \times 10^{-7}$
Copper (Cu)	lb/hr	NA	7.85×10^{-5}	1.16×10^{-5}
Iron (Fe)	lb/hr	NA	2.81×10^{-3}	4.69×10^{-5}
Lead (Pb)	lb/hr	NA	1.41×10^{-3}	1.44×10^{-4}
Magnesium (Mg)	lb/hr	NA	1.01×10^{-3}	1.96×10^{-5}
Manganese (Mn)	lb/hr	NA	9.86×10^{-5}	2.48×10^{-5}
Mercury (Hg)	lb/hr	$< 5.52 \times 10^{-5}$	4.46×10^{-5}	1.71×10^{-5}
Nickel (Ni)	lb/hr	NA	3.79×10^{-5}	5.92×10^{-6}
Potassium (K)	lb/hr	NA	1.89×10^{-3}	2.00×10^{-4}
Selenium (Se)	lb/hr	NA	4.64×10^{-6}	8.41×10^{-7}
Silver (Ag)	lb/hr	NA	$< 4.24 \times 10^{-6}$	$< 4.62 \times 10^{-7}$
Sodium (Na)	lb/hr	NA	2.00×10^{-3}	6.81×10^{-4}
Thallium (Tl)	lb/hr	NA	2.15×10^{-5}	7.44×10^{-7}
Vanadium (V)	lb/hr	NA	6.62×10^{-6}	$< 3.88 \times 10^{-7}$
Zinc (Zn)	lb/hr	NA	3.13×10^{-4}	2.40×10^{-5}
Total Chromatographable SVOC				
SVOC - Gravimetric Organics (>C-16)	lb/hr	NA	4.39×10^{-3}	1.63×10^{-4}
SVOC - Chromatographable Organics (C-7 through C-16)	lb/hr	NA	1.85×10^{-3}	3.96×10^{-4}
Targeted VOC via EPA Method 0030				
Volatile organic compounds (VOC)	—	NA	see Table 3-19 A/B	see Table 3-20 A/B

OVERALL SUMMARY OF ANALYTICAL RESULTS
FROM JCI/UPCYCLE TEST PROGRAM (continued)

Analyte(s)	Reporting Units	Hammermill Dryer Outlet	Kiln Scrubber Inlet	Kiln Scrubber Outlet
Total VOC via EPA Method 0040				
Methane (CH_4)	lb/hr	NA	4.80×10^{-4}	3.97×10^{-3}
Ethane (C_2H_6)	lb/hr	NA	$< 1.12 \times 10^{-4}$	$< 1.01 \times 10^{-3}$
C_2 as ethane	lb/hr	NA	2.72×10^{-3}	$< 1.01 \times 10^{-3}$
Propane (C_3H_8)	lb/hr	NA	$< 1.65 \times 10^{-4}$	$< 1.49 \times 10^{-3}$
C_3 as propane	lb/hr	NA	1.12×10^{-3}	$< 1.49 \times 10^{-3}$
Butane (C_4H_{10})	lb/hr	NA	$< 2.17 \times 10^{-4}$	$< 1.96 \times 10^{-3}$
Pentane (C_5H_{12})	lb/hr	NA	$< 2.70 \times 10^{-4}$	$< 2.43 \times 10^{-3}$
C_5 as pentane	lb/hr	NA	6.66×10^{-6}	4.51×10^{-5}
Hexane (C_6H_{14})	lb/hr	NA	$< 3.23 \times 10^{-4}$	$< 2.91 \times 10^{-3}$
C_6 as hexane	lb/hr	NA	$< 1.13 \times 10^{-7}$	$< 8.96 \times 10^{-7}$
Heptane (C_7H_{16})	lb/hr	NA	$< 3.75 \times 10^{-4}$	$< 3.38 \times 10^{-3}$
C_7 as heptane	lb/hr	NA	* 1.11×10^{-6}	* 8.61×10^{-6}
HCl, HBr, HF, NH_3, and Cl_2 via EPA Method 0050				
Hydrogen chloride (HCl)	lb/hr	NA	1.79×10^{-1}	$< 6.44 \times 10^{-5}$
Hydrogen bromide (HBr)	lb/hr	NA	1.43×10^{-3}	$< 1.22 \times 10^{-4}$
Hydrogen fluoride (HF)	lb/hr	NA	1.04×10^{-2}	$< 6.59 \times 10^{-5}$
Ammonia (NH_3)	lb/hr	NA	8.59×10^{-3}	$< 1.14 \times 10^{-5}$
Chlorine (Cl_2)	lb/hr	NA	1.18×10^{-3}	$< 4.61 \times 10^{-5}$
Hexavalent Chromium via EPA Method 0061				
Hexavalent Chromium (Cr^{6+})	lb/hr	NA	2.77×10^{-6}	$< 3.94 \times 10^{-7}$

< Indicates below minimum detection limit (or average calculated using one or more nondetected runs).
* See individual summary table for specific circumstances regarding analytical results data.

zone. Based on the CO results obtained during the second sampling run, 0.06 lb/hr (10.7 ppmdv), the high levels of CO in the initial sampling run were not related to the dredged material being processed, but rather were due to poor combustion in the air heater. Based on this observation, the results for CO and also for VOC emissions (0.34 lb/hr) obtained during the first sampling run are not representative of these total emissions from a process or material consideration. The second sampling run emission results, i.e., CO at 0.06 lb/hr and VOCs at 0.03 lb/hr, are deemed representative of the emission rates of these compounds from the hammermill dryer/grinder system.

Trace level dioxins and furans were detected in the as-dredged material (in-situ) and subsequently in the dewatered dredged material filter cake. Gaseous emissions from the hammermill dryer/grinder system also displayed minute quantities of PCDD/PCDF with furan emissions being below detection levels for all species in the second sampling run. Emission rates for these two compounds on a toxicity equivalent factor (TEF) basis corrected to 7% O_2 are 1.03×10^{-12} lb/hr for PCDD and 2.11×10^{-11} lb/hr for PCDF.

The mercury emissions from the hammermill dryer/grinder system and the problem with blank contamination are discussed above. Given that discussion, the value of $<5.52 \times 10^{-5}$ lb/hr presented as an average of the two sampling runs (1.09×10^{-4} lb/hr and $<1.5 \times 10^{-6}$ lb/hr respectively) may overestimate actual mercury emissions from the hammermill circuit. Using this average mercury emission value, it has been calculated that <6.2% of the mercury was emitted to atmosphere. However, if the second sampling run is deemed more representative by eliminating the possible influence of blank contamination on emission results, then the emissions of mercury to atmosphere based on the calculated input quantity and measured output, become 0.17%, a significant difference. From an overly conservative evaluation standpoint, the higher values are used and reported.

Particulate emissions from the hammermill dryer/grinder baghouse averaged 0.013 grains/dscf (0.14 lb/hr). The higher than expected level of these particulate emissions is attributed to the condition of the filter bags in the system baghouse. No nuisance dust emissions were observed from the hammermill dryer/grinder system as this equipment operated under negative pressure.

Emissions from the rotary kiln circuit were measured at two points, the inlet to the scrubber (kiln exit) and the exit from the scrubber. The purpose in sampling at these locations was to attempt to determine control efficiencies of the pollution control system for the various analytes. The focus on reporting however, is the emission of a specific analyte at the scrubber exit.

The increase in NOx emissions at the scrubber outlet over that at the scrubber inlet (0.199 lb/hr vs. 0.18 lb/hr) may be deemed attributable to two specific causes. The first cause is the higher fuel consumption in the pilot rotary kiln system. Fuel consumption is considerably greater than that expected for a commercial sized rotary kiln due to the low material loading rate, high air/solids ratio and high shell heat flux in the pilot rotary kiln. The second cause is combustion of natural gas in the afterburner unit of the pollution control system with the resultant creation of fuel and thermal NOx.

Total particulate emissions from the scrubber of 0.0039 grains/dscf are below the currently proposed Maximum Achievable Control Technology (MACT) regulatory limit of 0.025 grains/dscf for a lightweight aggregate kiln.

As was the case from the hammermill dryer/grinder, trace quantities of PCDD/PCDF emissions were detected at the scrubber outlet. These combined emissions on a toxicity equivalent factor basis, corrected to 7% O_2 are 0.09 ngTEF/Nm^3 (3.24 x 10^{-11} lbTEQ/hr) as compared to projected regulatory limits of 0.20 ngTEF/Nm^3 or 0.40 ngTEF/Nm^3 coincident with an off-gas quench temperature of <400°F. For either comparison, the reported emissions are less than the proposed limits.

Emissions from the rotary kiln scrubber for SVOCs were below method detection limits with the following exceptions. Naphthalene, 2-methylnaphthalene, bis(2-Ethylhexyl)phthalate, and pyrene were detected in the gaseous emissions but below quantitation. Di-n-butylphthalate was found in the blank and in the gaseous emission, but was below quantitation.

Analysis of the gas stream from the rotary kiln scrubber for PCBs showed trace quantities of a few specific congeners during the sampling runs while many congeners were below minimum detection limits. Trace quantities were also detected in the blanks for the various total chlorobenzene compounds. In all cases, any PCB emissions that were detected were in minute amounts.

Overall, metals emissions from the scrubber were exceedingly low with control efficiencies across the system providing an order of magnitude or greater reduction. The one exception to this was mercury. The reported mercury emission at the scrubber outlet was 1.71 x 10^{-5} lb/hr versus an inlet loading to the scrubber of 4.46 x 10^{-5} lb/hr, or a 61.7% reduction in emissions. In reviewing the individual sampling runs, the mercury loadings to the scrubber were consistent, ranging between 4.05 x 10^{-5} lb/hr to 4.69 x 10^{-5} lb/hr. However, scrubber emissions for mercury ranged from a high of 3.76 x 10^{-5} lb/hr for the first sampling run to a low of 6.38 x 10^{-6} lb/hr for the third sampling run, a significant difference. The laboratory reviewed the data and found no abnormalities in the analysis. However, the effect on the overall average mercury emissions from the surprisingly high first sampling run is marked. If the first run were excluded, the overall average mercury emissions from the scrubber would be 6.845 x 10^{-6} lb/hr, a decrease of approximately 60%. Consequently, the efficiency of the kiln pollution control system would increase to 84.3%, a significant improvement in the control efficiency of the system for mercury. However, since there is no apparent explanation for the higher mercury emission value for sampling run one, it is included in the overall average.

The analytical results for targeted VOC emissions from the scrubber were for almost every analyte below the minimum detection limit or below the quantitation limit. The exceptions to this finding were iodomethane, carbon disulfide and 1,2,4-trimethylbenzene all of which were detected and quantified. Methylene chloride and benzene were detected in the laboratory blank. Toluene was also detected above the instrument calibration range but below the quantitation limit. The presence of methylene chloride and toluene were most likely the result of field or laboratory contamination as discussed above. Again, any VOC compounds detected in the scrubber outlet were found in trace amounts.

The results for HCl, HBr, HF, ammonia, chlorine and hexavalent chromium emissions from the scrubber outlet were all below their respective minimum detection limit for each sampling run.

4.6.2 Process Sample Results

Chemical analyses and materials characterization were performed on the following process related samples in accordance with the provisions of the "Test Program for Sediment

Decontamination Pilot Project" prepared by FFE Minerals in conjunction with JCI/UPCYCLE as well as with the QAPP prepared by FAC. The process related samples undergoing analyses were: shale; feed pellets; aggregate product; filter fines; scrubber make-up water; scrubber liquor and fuel oil.

The comprehensive analytical data package including all results and laboratory case narratives is included in FAC's final report.

4.6.2.1 Shale

The shale provided by the Lehigh Portland Cement lightweight aggregate plant was analyzed for metals, halogens and total organic carbon. The results of these analyses are presented in Table 10. The metals content of this shale sample are comparable with previously analyzed shale samples. For reference, a shale metals comparison is presented in Table 11. Table 12A provides an oxide analysis of the shale.

4.6.2.2 Feed Pellets

The feed pellets, a mixture of 70% dewatered, dried and ground dredged filter cake and 30% dried and ground shale were subjected to extensive analyses for: metals; halogens; PCDD/PCDF; herbicides; pesticides; PCB aroclors; VOCs; SVOCs; and TCLP volatiles.

The results of the feed pellet analyses for metals, halogens and PCDD/PCDF are presented in Table 12 and for the oxide analysis of the filter cake component in Table 12A. As would be expected based on the filter cake and shale analyses, the concentrations of most metals were within the range expected based on the weighted effect of the contribution from these two components. The metals concentrations of the feed pellets are comparable to those previously analyzed with a similar mix design using dredged material from the Perth Amboy Marina. A comparison of the metal concentrations from these two feed pellet preparations is presented in Table 13. Trace levels of PCDD/PCDF analytes were detected in the feed pellets that were within a reasonable range again based on the weighted contribution from the filter cake and shale. Total PCDD/PCDF TEF equivalency averaged 187 pg/g for the feed pellets.

Herbicide and pesticide results for all sampling runs were below analytical detection limits or non-detect levels.

Two PCB aroclors, PCB 1248 and PCB 1254 were detected in the feed pellets in all samples analyzed at levels averaging 0.14 mg/kg and 0.12 mg/kg respectively. It is interesting to note that none of the individual PCB aroclors was detected in the analysis of the dewatered filter cake. All other PCB aroclors tested for in the feed pellets were below analytical detection limits in all samples. All VOC results were below analytical detection limits or at non-detect levels for all samples. Similar results were obtained for all SVOC analytes with the following exceptions: benzo(a)pyrene, bis(2-Ethylhexyl)phthalate, fluoranthene and pyrene. All of these four compounds were also detected in the dewatered filter cake and therefore could be expected to be present in the feed pellets.

Results for all TCLP volatiles and all TCLP semivolatiles analytes were below analytical detection limits or at non-detect levels for all samples.

Table 10

Shale Sample Results

(Source: FAC)

ANALYSIS OF SHALE SAMPLES
JCI/UPCYCLE
AGGREGATE KILN TESTING

SHALE SAMPLES						
Sampling date		03/16/01		03/16/01 Duplicate		Average
Sampling times		NA(1)		NA(1)		
Sampling frequency		Once During Test Program				
Metals - mg/kg (dry)						
Aluminum		7130		7120		7125
Antimony	<	1	<	1	<	1
Arsenic		6.94		7.49		7.22
Barium		134		130		132
Beryllium	<	0.5	<	0.5	<	0.5
Cadmium	<	0.5	<	0.5	<	0.5
Calcium		36700		34300		35500
Chromium		7.24		7.46		7.35
Cobalt		15.4		15.5		15.5
Copper		39.4		42.0		40.7
Iron		24100		24600		24350
Lead		22.3		22.3		22.3
Magnesium		2490		2540		2515
Manganese		398		409		404
Nickel		30.9		31.1		31.0
Potassium		6140		5720		5930
Selenium	<	1	<	1	<	1
Silver	<	1	<	1	<	1
Sodium		1110		1080		1095
Thallium	<	1	<	1	<	1
Vanadium		8.8		8.76		8.78
Zinc		54.6		55.6		55.1
Mercury		0.172		0.074		0.123
Halogens - %, w/w						
total chlorine		0.04		0.05		0.05
total bromine	<	0.01	<	0.01	<	0.01
total flourine		0.03		0.03		0.03
Total Organic Carbon - %, w/w		0.4		0.4		0.4

Notes:
(1) One representative composite sample was taken during the testing program.
< Indicates below analytical detection limit or a non-detect included in an average.

Table 11

Comparison of Shale Samples - Average Results for Metals Concentrations

Analysis Date	Mar. 2001[1]	Sept. 1992[2]
Metal - mg/kg (dry)		
Antimony	<1	1.55
Arsenic	7.22	5.37
Barium	132	79.9
Beryllium	<0.5	0.744
Cadmium	<0.5	3.968
Chromium	7.35	62.85
Cobalt	15.5	16.8325
Copper	40.7	54.08
Lead	22.3	16
Manganese	404	445
Mercury	0.123	0.0895
Nickel	31	40.725
Selenium	<1	0.744
Silver	<1	1.3025
Thallium	<1	0.9303
Vanadium	8.78	125.35
Zinc	55.1	81.45

Notes: 1. Analysis of Shale Samples - Table 3-28 (Average Result) FAC
< indicates below analytical detection limit or a non-detect included in an average.
2. Metals Concentrations - Norlite Corporation Table 2.1-25 ENSR Corp.

Table 12

Feed Pellet Sample Results
Metals/Halogens/PCDD/PCDF

(Source: FAC)

ANALYSIS OF FEED PELLET SAMPLES
JCI/UPCYCLE
AGGREGATE KILN TESTING

FEED PELLETS					
Sampling date	03/14/01	03/15/01	03/15/01 Duplicate	03/14-15/01 Composite	Average
Sampling times	(1)	(1)	(1)	(1)	
Sampling frequency	60 minutes	60 minutes	60 minutes	60 minutes	
Metals - mg/kg (dry)					
Aluminum	11800	12300	13000	12200	12325
Antimony	< 1	< 1	< 1	< 1	< 1
Arsenic	10.4	10.5	10.4	11.9	10.8
Barium	127	124	131	129	128
Beryllium	< 0.5	< 0.5	< 0.5	< 0.5	< 0.5
Cadmium	1.45	1.41	1.45	1.46	1.44
Calcium	17000	18100	17900	18500	17875
Chromium	116	117	120	119	118
Cobalt	13.1	11.9	12.5	12.8	12.6
Copper	126	115	118	138	124
Iron	29200	27800	28100	30000	28775
Lead	115	111	113	114	113
Magnesium	6440	6490	6600	6610	6535
Manganese	567	553	559	570	562
Nickel	46.7	44.3	45.6	47.2	46.0
Potassium	3990	4070	4450	4220	4183
Selenium	< 1	< 1	< 1	< 1	< 1
Silver	3.28	3.33	3.5	3.4	3.4
Sodium	4370	3880	3980	4640	4218
Thallium	< 1	< 1	< 1	< 1	< 1
Vanadium	28.3	27.1	28.9	29.3	28.4
Zinc	213	204	210	214	210
Mercury	2.18	2.397	2.417	2.358	2.338
Halogens - %, w/w					
total chlorine	0.31	0.32	0.28	0.35	0.32
total bromine	< 0.01	< 0.01	< 0.01	< 0.01	< 0.01
total flourine	< 0.01	< 0.01	< 0.01	< 0.01	< 0.01
PCDD/PCDF - pg/g					
TOTAL TCDF	400	350	400	400	388
TOTAL PCDF	430	420	410	420	420
TOTAL HxCDF	530	480	520	510	510
TOTAL HpCDF	980	1000	990	920	973
TOTAL TCDD	180	170	200	190	185
TOTAL PCDD	19	35	39	20	28
TOTAL HxCDD	190	190	190	190	190
TOTAL HpCDD	790	770	780	780	780
2378-TCDF	88	87	87	88	88
2378-TCDD	120	120	120	120	120
12378-PCDF	13	14	13	13	13
23478-PCDF	28	33	26	25	28
12378-PCDD	2.9	4.7	4.5	4.0	4.0
123478-HxCDF	170	180	170	160	170
123678-HxCDF	47	< 65	41	41	< 49
234678-HxCDF	17	17	16	16	17
123789-HxCDF	1.1	1.1	0.76	1.1	1.0
123478-HxCDD	4.5	4.3	4.5	4.4	4.4
123678-HxCDD	20	20	20	19	20
123789-HxCDD	15	15	14	14	15
1234678-HpCDF	700	710	700	680	698
1234789-HpCDF	22	23	22	21	22
1234678-HpCDD	340	330	330	330	333
OCDF	890	900	890	860	885
OCDD	3100	3100	3100	3100	3100
2378-TCDD Equivalency	**186**	**192**	**185**	**183**	**187**

Notes:
(1) Sampling was conducted approximately every hour during air emissions testing and composited for each test day as follows:
03/14/01: 0800, 03/14/01 - 0700, 03/15/01; 03/15/01: 0800, 03/15/01 - 0600, 03/16/01.
< Indicates below analytical detection limit or a non-detect included in an average.

Table 12A

CHEMICAL ANALYSIS - "AS RECEIVED" SAMPLES (WT. % DRY BASIS)		
Sample	Dredge Filter Cake	Shale Fines
Lab #	200914	200925
Analog #	C001059	C001060
Loss @ 105°C	57.00	8.05
SiO_2	58.36	51.06
Al_2O_3	11.71	17.98
Fe_2O_3	5.15	7.37
CaO	1.53	5.15
MgO	1.90	1.83
K_2O	2.50	6.67
Na_2O	3.50	0.40
SO_3	2.00	0.65
P_2O_5	0.48	0.15
TiO_2	0.76	0.72
Mn_2O_3	0.10	0.07
Loss @ 900°C	11.90	7.64
Total	99.89	99.69
C	2.45	0.400
S	0.69	0.190
Cl	0.73	0.006
CO2	0.950	4.220

Sourece: FFE Minerals

Table 13

Comparison of Feed Pellet Samples - Metals Concentrations

Analysis Date	March 2001[1]	August 1998[2]
Metal - mg/kg (dry)		
Antimony	<1	<2.89
Arsenic	10.8	46.4
Barium	128	156
Beryllium	<0.5	1.27
Cadmium	1.44	<0.289
Chromium	118	98.7
Cobalt	12.6	NR
Copper	124	322
Lead	113	194
Manganese	562	NR
Mercury	2.338	3.46
Nickel	46	41
Selenium	<1	<2.89
Silver	3.4	<0.289
Thallium	<1	<5.77
Vanadium	28.4	NR
Zinc	210	311

Notes: NR = No results. Metal not analyzed.
< Indicates below analytical detection limit or a non-detect in an average.
1. Analysis of Feed Pellet Samples - Table 3-29A (Average Result) FAC
2. Mix #5 Composite Feed - Table 15 Fuller R&D (Shealy Environmental)

4.6.2.3 Aggregate Product

The lightweight aggregate product was subjected to the following chemical analyses: metals; halogens; PCDD/PCDF; herbicides and pesticides; PCB aroclors; VOCs; SVOCs; TCLP volatiles; TCLP semivolatiles; TCLP metals; and MEP metals.

Metals, halogen and PCDD/PCDF results are presented in Table 14. For additional comparison and evaluation, these metals results and those from two analyses of aggregate product prepared from dredged material from the Perth Amboy Marina are presented in Table 15. The results from these three sets of data are quite comparable. Table 15A provides a comparison of metals results pre- and post-processing, i.e., between the as-dredged sediment and the LWA product.

A brief discussion of the reported average mercury concentration in the aggregate product is warranted. The average value for mercury in the aggregate was <0.147 mg/kg. The individual sample results (on an mg/kg) basis were: <0.25, <0.25, 0.054 and 0.034 respectively. The method detection limit (MDL) for all samples was 0.25 mg/kg. The < symbol is indicative of a result that was below the MDL or a non-detect value included in an average reported value. A review of the laboratory data package revealed that in the cases where the reported analytical value was given as <0.25 mg/kg, the actual result was non-detect. However, in keeping with the convention stated above, the MDL was used in the average value. As may be the case for this instance and many others throughout the report, the reported average value may overstate the actual concentration of a particular analyte.

Trace quantities of PCDD/PCDF analytes were detected in the aggregate product at the part per trillion level (pg/g). Total PCDD/PCDF TEF equivalency averaged 1.01 pg/g for the aggregate product. These results are consistent with the levels found in the lightweight aggregate produced during an earlier test campaign as described above. For comparison, current and previous PCDD/PCDF data for the aggregate product is presented in Table 16.

All sample results for herbicides, pesticides, PCB aroclors, VOCs, SVOCs, TCLP volatiles and TCLP semivolatiles were below analytical detection limits or at non-detect levels.

The results for the TCLP metals analyses were well below the established regulatory limits and again compare favorably with prior TCLP metals results from the aggregate produced from Perth Amboy Marina dredged material. Results of the aggregate product samples for TCLP metals and for comparison, the prior results for TCLP metals are presented in Table 17. The results for the MEP metals (extractions 1-9) are also provided. A summary table, Table 18, presents the average result for each MEP metal for each of the nine (9) extractions performed. A search of USEPA databases determined that there are no established regulatory limits for MEP metals.

4.6.2.4 Ceramic Filter Catch

The ceramic filter catch (fines) samples were subjected to the following chemical analyses: metals; total organic carbon; PCDD/PCDF; herbicides and pesticides; PCB aroclors; VOCs; SVOCs; TCLP volatiles; TCLP semivolatiles; TCLP metals; and MEP metals.

The filter fines are in essence identical to the aggregate product and result from the breakage of the product during the manufacturing process. On a mass basis, the quantity of fines generated and collected during the rotary kiln test amounted to 0.26% (by weight) or 11.1 pounds of the

Table 14

Aggregate Product Sample Results
Metals/Halogens/PCDD/PCDF

(Source: FAC)

ANALYSIS OF AGGREGATE PRODUCT SAMPLES
JCI/UPCYCLE
AGGREGATE KILN TESTING

AGGREGATE PRODUCT					
Sampling date	03/14/01	03/15/01	03/15/01 Duplicate	03/14-15/01 Composite	Average
Sampling times	(1)	(1)	(1)	(1)	
Sampling frequency	30 minutes	30 minutes	30 minutes	30 minutes	
Metals - mg/kg (dry)					
Aluminum	3220	6590	5200	7160	5543
Antimony	< 1	< 1	< 1	< 1	< 1
Arsenic	6.59	10.7	10	10.1	9.3
Barium	20.2	45.1	35.3	53.2	38.5
Beryllium	< 0.5	< 0.5	< 0.5	< 0.5	< 0.5
Cadmium	< 0.5	< 0.5	< 0.5	< 0.5	< 0.50
Calcium	3950	5780	4870	7420	5505
Chromium	4.82	13.8	11.2	15	11.2
Cobalt	1.2	11.2	11.3	7.86	7.9
Copper	13.9	111.8	110	67.3	75.8
Iron	2020	16000	15000	11900	11230
Lead	3.63	11	9.79	10.7	9
Magnesium	626	1650	1420	1730	1357
Manganese	29.3	87.2	74.2	91.8	70.6
Nickel	5.23	42.1	40.2	27.7	28.8
Potassium	253	860	654	739	627
Selenium	< 1	< 1	< 1	< 1	< 1
Silver	< 1	< 1	< 1	< 1	< 1.0
Sodium	950	1470	1290	1340	1263
Thallium	< 1	< 1	< 1	< 1	< 1
Vanadium	5.29	9.02	7.53	10.5	8.1
Zinc	11.6	27.7	24.9	21.3	21.4
Mercury	< 0.25	< 0.25	0.054	0.034	< 0.147
Halogens - %, w/w					
total chlorine	0.07	0.04	0.06	0.03	0.05
total bromine	< 0.01	< 0.01	< 0.01	< 0.01	< 0.01
total flourine	< 0.01	< 0.01	< 0.01	< 0.01	< 0.01
PCDD/PCDF - pg/g					
TOTAL TCDF	3.6	1.9	0.44	0.69	1.7
TOTAL PCDF	3.8	2.1	0.78	1.2	2.0
TOTAL HxCDF	4.9	3.2	1.5	0.79	2.6
TOTAL HpCDF	9.8	6.4	1.4	0.70	4.6
TOTAL TCDD	1.5	0.52	< 0.11	0.22	< 0.59
TOTAL PCDD	< 0.19	< 0.18	< 0.14	< 0.092	< 0.15
TOTAL HxCDD	2.2	1.2	0.5	0.60	1.1
TOTAL HpCDD	12	6.3	2.5	3.1	6.0
2378-TCDF	0.93	0.57	0.21	0.26	0.49
2378-TCDD	1.0	0.52	< 0.11	0.22	< 0.46
12378-PCDF	0.28	< 0.11	0.13	0.15	< 0.17
23478-PCDF	0.44	0.28	0.11	0.20	0.26
12378-PCDD	< 0.14	< 0.18	< 0.14	< 0.092	< 0.14
123478-HxCDF	1.8	1.0	0.28	0.33	0.85
123678-HxCDF	< 0.54	0.31	0.16	0.19	0.30
234678-HxCDF	0.29	0.20	0.16	0.25	0.23
123789-HxCDF	< 0.19	< 0.13	< 0.14	< 0.095	< 0.14
123478-HxCDD	0.11	< 0.11	0.088	0.14	< 0.11
123678-HxCDD	0.33	0.25	0.14	0.17	0.22
123789-HxCDD	0.27	0.20	0.12	0.18	0.19
1234678-HpCDF	6.7	4.4	0.74	< 0.91	3.2
1234789-HpCDF	0.36	0.28	0.14	0.18	0.24
1234678-HpCDD	5.9	3.3	1.5	1.9	3.2
OCDF	7.5	4.8	1.1	2.0	3.9
OCDD	46	25	12	13	24
2378-TCDD Equivalency	**1.93**	**1.14**	**0.41**	**0.58**	**1.01**

Notes:

(1) Sampling was conducted approximately every half hour during air emissions testing and composited for each test day as follows:
03/14/01: 0800, 03/14-01 - 0700, 03/15/01; 03/15/01: 0700, 03/15/01 - 0600, 03/16/01.

< Indicates below analytical detection limit or a non-detect included in an average.

Table 15

Comparison of LWA Product Samples - Metals Concentrations

Analysis Date	March 2001[1]	August 1998[2]	December 1998[3]
Metal - mg/kg (dry)			
Antimony	<1	<2.5	ND
Arsenic	9.3	43.1	28
Barium	38.5	14.7	39
Beryllium	<0.5	<0.250	ND
Cadmium	<0.5	<0.250	ND
Chromium	11	7.75	11
Cobalt	7.9	NR	8.5
Copper	76	200	190
Lead	9	11.8	9.6
Manganese	71	NR	78
Mercury	<0.147	<0.167	ND
Nickel	28.8	32.8	34
Selenium	<1	<2.50	ND
Silver	<1	<0.250	ND
Thallium	<1	<5.00	ND
Vanadium	8.1	NR	7.8
Zinc	21	26.1	38

Notes: ND = Non-detect.
NR = No Result - Metal not analyzed.
< Indicates below analytical detection limit or a non-detect in an average.
1. Analysis of Aggregate Product Samples - Table 3-30A (Average Result) FAC
2. Mix #5 Product - Table 16 Fuller R&D (Shealy Environmental)
3. Report of Analysis - Port Authority of NY&NJ (Veritech Labs)

Table 15A

As-Dredged Sediment and Lightweight Aggregate Samples
Chemical Data Summary - Metals

Metal (mg/kg) (average values)	AD	LWA
Aluminum	12250	5543
Antimony	0.55	<1
Arsenic	13.6	9.3
Barium	114	38.5
Beryllium	0.8	<0.5
Cadmium	2.3	<0.50
Calcium	7340	5505
Chromium	148	11.2
Cobalt	13.1	7.9
Copper	148	75.8
Iron	31650	11230
Lead	144	9
Magnesium	7980	1357
Manganese	578	70.6
Nickel	36.8	28.8
Potassium	2490	627
Selenium	0.73	<1
Silver	3.3	<1.0
Sodium	8095	1263
Thallium	1.5	<1
Vanadium	35.5	8.1
Zinc	278	21.4
Mercury	4.93	<0.147

Note: < indicates below analytical detection limit or a non-detect included in an average.

Table 16

Comparison of LWA Product Samples - PCDD/PCDF Results

Analysis Date	March 2001[1]	December 1998[2]
PCDD/PCDF (pg/g)		
Total TCDF	1.7	0.80
Total PCDF	2.0	2.3
Total HxCDF	2.6	2.5
Total HpCDF	4.6	13
Total TCDD	<0.59	28
Total PCDD	<0.15	6.3
Total HxCDD	1.1	7.2
Total HpCDD	6.0	20
2378-TCDF	0.49	0.80
2378-TCDD	<0.46	<0.33
12378-PCDF	<0.17	0.34
23478-PCDF	0.26	0.47
12378-PCDD	<0.14	0.48
123478-HxCDF	0.85	<1.5
123678-HxCDF	0.30	0.39
234678-HxCDF	0.23	0.30
123789-HxCDF	<0.14	<0.30
123478-HxCDD	<0.11	0.53
123678-HxCDD	0.22	0.68
123789-HxCDD	0.19	1.4
1234678-HpCDF	3.2	3.5
1234789-HpCDF	0.24	0.60
1234678-HpCDD	3.2	11
OCDF	3.9	12
OCDD	24	82

Notes: < Indicates below analytical detection limit or a non-detect in an average.
1. Analysis of Aggregate Product Samples Table 3-30A (Average Results) FAC
2. Certificate of Analysis Port Authority of NY&NJ - Philip Analytical Services

Table 17

Comparison of LWA Product Samples - TCLP Metals Results

Analysis Date	March 2001[1]	August 1998[2]	Regulatory Limit
Metal - mg/L			
Arsenic	<0.010	0.102	5.0
Barium	0.22	0.208	100.0
Cadmium	<0.005	<0.005	1.0
Chromium	<0.005	<0.010	5.0
Lead	<0.009	<0.050	5.0
Mercury	<0.0005	<0.0002	0.2
Selenium	0.016	<0.050	1.0
Silver	<0.005	<0.005	5.0

Notes: Only those metals with established regulatory limits are listed.
< Indicates below analyticl detection limit or a non-detect in an average.
1. Analysis of Aggregate Product Sample Table 3-30G (Average Results) FAC
2. Mix #5 Product Table 16 - Fuller R&D (Shealy Environmental)

Table 18

Summary of Aggregate Product Samples - MEP Metals Results

MEP Metal - mg/L	Extraction Number 1	2	3	4	5	6	7	8	9
Aluminum	1.56	3.47	2.94	2.88	3.70	3.82	2.72	4.08	5.40
Antimony	<0.005	<0.005	<0.005	<0.005	<0.005	<0.005	<0.005	<0.005	<0.005
Arsenic	<0.01	0.023	0.019	<0.012	<0.011	<0.01	<0.010	<0.01	<0.015
Barium	0.152	0.138	0.164	0.148	0.210	0.188	0.177	0.216	0.229
Beryllium	<0.001	<0.001	<0.001	<0.001	<0.001	<0.001	<0.001	<0.001	<0.001
Cadmium	<0.003	<0.003	<0.003	<0.003	<0.003	<0.003	<0.003	<0.003	<0.003
Calcium	6.82	9.08	6.81	8.65	4.81	7.82	6.93	4.47	7.2
Chromium	<0.005	<0.005	<0.006	<0.005	<0.005	<0.005	<0.005	<0.005	<0.007
Cobalt	0.022	0.017	0.012	0.018	0.012	0.012	0.021	0.011	0.010
Copper	0.156	0.023	0.015	0.027	0.077	0.058	0.105	0.150	0.081
Lead	<0.003	<0.003	<0.003	<0.003	<0.011	<0.003	<0.003	<0.005	<0.006
Magnesium	0.889	1.608	1.50	2.02	1.08	1.98	1.59	0.944	1.74
Manganese	0.052	0.107	0.071	0.092	0.047	0.092	0.068	0.045	0.072
Nickel	0.067	0.053	0.042	0.060	0.041	0.046	0.081	0.043	0.037
Potassium	1.75	1.72	1.56	1.86	1.83	2.43	2.74	2.31	2.12
Selenium	<0.01	<0.01	<0.01	<0.01	<0.01	<0.01	<0.01	<0.01	<0.01
Silver	<0.005	<0.005	<0.005	<0.005	<0.005	<0.005	<0.005	<0.005	<0.005
Sodium	58.6	15.1	8.12	9.52	7.54	11.63	15.63	8.77	8.42
Thallium	<0.01	<0.01	<0.01	<0.01	<0.011	<0.01	<0.010	<0.010	<0.01
Vanadium	<0.01	0.02	0.01	0.014	<0.010	<0.011	<0.010	<0.010	<0.014
Zinc	1.13	1.30	1.45	2.21	1.78	3.25	4.49	2.34	2.16
Iron	17.8	26.2	18.3	30.3	15.6	29.6	30.7	18.3	18.1
Mercury	<0.0002	<0.0003	<0.0002	<0.0002	<0.0002	<0.0002	<0.0002	<0.0002	<0.0002

Note: < Indicates below analytical detection limit or a non-detect included in an average.
Analysis of Aggregate Product Samples Table 3-30G through Table 3-30K (Average Results) FAC

due to the huge surface area of the filter fines particles. On a mass basis, the quantity of any detected analyte is minute. However, when the results are reviewed on a concentration basis, there may be increases in the concentrations of various organics in the filter fines over the levels reported for the aggregate product.

The metals, total organic carbon and PCDD/PCDF results for the filter fines are presented in Table 19. One anomaly in the metal results was that for lead where the lead concentrations in the filter fine samples averaged 4,547 ppm. Because of the very low dust loading to the ceramic filter, it is thought that lead that would normally collect on the filter fines was adsorbed onto the ceramic filter elements. These ceramic filter elements cannot be readily or easily changed between pilot testing programs, and therefore it is entirely possible that the detected lead may have existed within the filter elements from prior testing. While the lead concentrations detected are high, commercially, it is planned to recycle the collected fines within the process thus negating any potential disposal issues. Total PCDD/PCDF TEF equivalency averaged 26.4 pg/g for the ceramic filter fines. Tables 20 and 21 provide comparisons of the metals and PCDD/PCDF results for the aggregate product and for the filter fines.

Analyses of the filter fines for herbicides, pesticides and PCB aroclors showed all samples results to be below analytical detection limits or at non-detect levels for all compounds.

VOC analytical results for the filter fines indicate the following compounds to be present: benzene, carbon tetrachloride, chloroform, ethylbenzene, toluene, 1,24-trimethylbenzene, 1,3,5-trimethylbenzene, o-xylene, and p- & m-xylenes. All other VOCs were below analytical detection limits or at non-detect levels for all samples. The presence of methylene chloride, toluene and chloroform may be the result of field and/or laboratory contamination and has been discussed in greater detail in previous sections. The presence of the other VOCs identified, albeit at minute concentration levels, i.e., parts per billon, may have resulted from the condensation and adsorption of these materials on the fine filter particulate. No VOCs were detected in the aggregate product. Table 22 provides the results of those identified VOC compounds for the filter fines.

SVOC results for the filter fines were all below the analytical detection limits or at non-detect levels with the following exceptions. Bis(2-Ethylhexylphthalate) was detected in one sample but below the quantitation limit and fluorene was detected in all three samples analyzed, but in each case, below the quantitation limit.

The TCLP Volatile analyses of the filter fines were all below analytical detection limits or at non-detect levels for all samples with the following exceptions. Benzene was identified as being present in all three samples analyzed at an average concentration of 3 ug/L (ppb). Chloroform was found in one sample at a level of 10 ug/L and in the other two samples at levels below the quantitation limit. Toluene was reported as being present in all three samples at an average value of 4 ug/L. Lastly, p- & m-xylenes were detected in two of the samples at a level of 1 ug/L. The presence of chloroform and toluene, as previously discussed, may be the result of field and or laboratory contamination.

The TCLP semivolatile results were all below analytical detection limits or at non-detect levels for all samples.

TCLP metals results for the filter fines were all below established regulatory limits. Table 23 presents the TCLP metals results versus their regulatory limits for those metals with established

Table 19

Ceramic Filter Catch Sample Results
Metals/TOC/PCDD/PCDF

(Source: FAC)

ANALYSIS OF CERAMIC FILTER CATCH SAMPLES
JCI/UPCYCLE
AGGREGATE KILN TESTING

BAGHOUSE FILTER CATCH

Sampling date	03/14/01	03/15/01	03/14-16/01 Composite	Average
Sampling times	(1)	(1)	(1)	
Sampling frequency	180 minutes	180 minutes	180 minutes	
Metals - mg/kg (dry)				
Aluminum	16900	21800	19000	19233
Antimony	< 10	< 10	10.8	< 10.3
Arsenic	63.8	92.1	75.3	77.1
Barium	163	215	182	187
Beryllium	< 5	< 5	< 5	< 5
Cadmium	102	175	124	134
Calcium	27300	21900	26500	25233
Chromium	286	287	262	278
Cobalt	< 10	11.1	< 10	< 10.4
Copper	438	522	467	476
Iron	18200	20800	16800	18600
Lead	3560	5810	4270	4547
Magnesium	81800	49800	73900	68500
Manganese	12000	6930	10700	9877
Nickel	142	148	147	146
Potassium	16900	20700	18600	18733
Selenium	26.5	16.1	25.6	22.7
Silver	16.3	19.8	18.1	18.1
Sodium	128000	107000	124000	119667
Thallium	< 10	12.4	13.5	< 12.0
Vanadium	41.8	53.2	45.7	46.9
Zinc	627	1030	765	807
Mercury	9.4	6.0	8.7	8.0
Total Organic Carbon - %, w/w	1.0	0.4	0.4	0.6
PCDD/PCDF - pg/g				
TOTAL TCDF	170	55	160	128
TOTAL PCDF	22	61	160	81
TOTAL HxCDF	210	59	130	133
TOTAL HpCDF	170	50	120	113
TOTAL TCDD	57	19	45	40
TOTAL PCDD	120	38	86	81
TOTAL HxCDD	250	86	180	172
TOTAL HpCDD	280	120	210	203
2378-TCDF	38	12	32	27
2378-TCDD	0.94	0.40	0.72	0.69
12378-PCDF	9.4	3.0	7.7	6.7
23478-PCDF	28	8.1	22	19
12378-PCDD	4.8	1.5	3.6	3.3
123478-HxCDF	34	10	24	23
123678-HxCDF	18	5.5	13	12
234678-HxCDF	37	10	26	24
123789-HxCDF	8.0	2.2	5.1	5.1
123478-HxCDD	5.5	1.8	4.0	3.8
123678-HxCDD	19	6.3	13	13
123789-HxCDD	19	6.3	13	13
1234678-HpCDF	81	24	55	53
1234789-HpCDF	30	8.3	21	20
1234678-HpCDD	150	61	110	107
OCDF	68	20	47	45
OCDD	220	100	170	163
2378-TCDD Equivalency	**38.5**	**11.8**	**28.9**	**26.4**

Notes
(1) Sampling was conducted approximately every 3 hours during air emissions testing and composited for each test day as follows:
03/14/01: 0800, 03/14-01 - 0700, 03/15/01; 03/15/01: 0700, 03/15/01 - 0600, 03/16/01.
< Indicates below analytical detection limit or a non-detect included in an average.

Table 20

Comparison of LWA Product and Ceramic Filter Catch Samples - Metals Results

Metal - mg/kg (dry)	LWA Product	Filter Fines
Antimony	<1	<10.3
Arsenic	9.3	77.1
Barium	38.5	187
Beryllium	<0.5	<5
Cadmium	<0.5	134
Chromium	11	278
Cobalt	7.9	<10.4
Copper	76	476
Lead	9	4547
Manganese	71	9877
Mercury	<0.147	8.0
Nickel	28.8	146
Selenium	<1	22.7
Silver	<1	18.1
Thallium	<1	<12.0
Vanadium	8.1	46.9
Zinc	21	807

Notes: < Indicates below analytical detection limit or a non-detect in an average.
Analysis of LWA Product Samples Table 3-30A (Average Values) and
Analysis of Filter Catch Samples Table 3-31A (Average Values) FAC

Table 21

Comparison of LWA Product and Ceramic Filter Catch Samples - PCDD/PCDF Results

PCDD/PCDF - pg/g	LWA Product	Filter Fines
Total TCDF	1.7	128
Total PCDF	2.0	81
Total HxCDF	2.6	133
Total HpCDF	4.6	113
Total TCDD	<0.59	40
Total PCDD	<0.15	81
Total HxCDD	1.1	172
Total HpCDD	6.0	203
2378-TCDF	0.49	27
2378-TCDD	<0.46	0.69
12378-PCDF	<0.17	6.7
23478-PCDF	0.26	19
12378-PCDD	<0.14	3.3
123478-HxCDF	0.85	23
123678-HxCDF	0.30	12
234678-HxCDF	0.23	24
123789-HxCDF	<0.14	5.1
123478-HxCDD	<0.11	3.8
123678-HxCDD	0.22	13
123789-HxCDD	0.19	13
1234678-HpCDF	3.2	53
1234789-HpCDF	0.24	20
1234678-HpCDD	3.2	107
OCDF	3.9	45
OCDD	24	163

Note: < Indicates below analytical detection limit or a non-detect included in an average.
Analysis of LWA Product Samples Table 3-30A (Average Values) and
Analysis of Filter Catch Samples Table 3-31A (Average Values) FAC

Table 22

Analysis of Ceramic Filter Catch Samples- Volatile Organic Compound Results

VOC - ug/kg

Sample Date	3/14/01	3/15/01	Composite	Average
Benzene	83	75	120	93
Carbon tetrachloride	18	34	24	25
Chloroform	200	220	240	220
Ethylbenzene	17	24	64	35
Tetrachloroethylene	6	8	9	8
Toluene	<94	120	210	141
1,2,4-Trimethylbenzene	24	16	36	25
1,3,5-Trimethylbenzene	12	11	20	14
o-Xylene	20	23	61	35
p- & m-Xylenes	77	130	290	166

Note: Analysis of Ceramic Filter Catch Samples Table 3-31C FAC
Only those VOCs detected are listed.

Table 23

Comparison of Ceramic Filter Catch Samples- TCLP Metals Results

Metal - mg/L	Result	Regulatory Limit
Arsenic	<0.010	5.0
Barium	0.22	100.0
Cadmium	<0.005	1.0
Chromium	<0.005	5.0
Lead	<0.009	5.0
Mercury	<0.0005	0.2
Selenium	0.016	1.0
Silver	<0.005	5.0

Notes: Only those metals with established regulatory limits are listed.
< Indicates below analytical detection limit or a non-detect included in an average.
Analysis of Ceramic Filter Catch (Fines) Samples Table 3-31G (Average Results) FAC

limits. The results for the MEP metals (extractions 1-9) are provided in the detailed final project report prepared by FAC. Summary MEP data results are included in the Appendix. A search of USEPA databases determined that there are no established regulatory limits for MEP metals.

4.6.2.5 Scrubber Make-up Water

The results of the analyses of the scrubber make-up water for metals and total halogens are presented in Table 24. There do not appear to be any anomalies in the make-up water analyses, with the exception of a minute quantity of mercury (0.0016 ug/L) being detected in the composite make-up water sample but not in the composite duplicate sample.

4.6.2.6 Scrubber Liquor

The results of the analyses of the scrubber liquor for metals and total halogens are presented in Table 25. As was noted in the Analytical Discussion section, the mercury concentrations reported were the result of re-analyses of the samples due to an acid digestion problem with the precipitate within the samples. The increased mercury concentration level from the first sample to the second sample (0.48 ug/L to 0.72 ug/L) was expected and attributable to the condensation and collection of mercury in the scrubber liquor over time. The decrease in mercury concentration in the third and final sample to 0.58 ug/L was not anticipated. A review of the mercury related data for the time related gaseous loadings and emissions and process samples, did not provide any discernable rationale for this occurrence. Notable in the scrubber liquor results was the increase in the sodium concentration in the scrubber liquor over that in the scrubber makeup water. This increase can be attributed to the use of the 50% sodium hydroxide solution within the scrubber for neutralization purposes.

4.6.2.7 Fuel Oil

A sample of the #2 fuel oil used for the rotary kiln burner was analyzed for its halogen content by FAC. The results of this analysis are presented in the Appendix. Additionally, FFE Minerals analyzed the #2 fuel oil for its ultimate analysis (exact elemental chemical composition), gross heating value and sulfide content. These results are presented in the FFEM Final Report.

4.7 Lightweight Aggregate Product Physical and Geotechnical Testing Results

4.7.1 Physical Results

The report prepared by SOR Testing Laboratories, Inc. concluded that the lightweight aggregate sample tested was suitable for use in concrete. SOR's report is presented as Figure 5. However, the gradation of the sample did not fully meet the applicable ASTM specification (ASTM C-136) for gradation. The small size of the sample handled coupled with the laboratory method employed to crush and size the aggregate sample and then to hand blend the fractions to achieve the desired gradation was imprecise at best. Using an improved means of crushing and sizing of the aggregate will solve the gradation issue. Commercially available crushing, screening and sizing equipment are integral components of the finish plant portion of existing full-scale lightweight aggregate production plants. All other tested properties of the aggregate met ASTM requirements for Lightweight Aggregates for Structural Concrete (ASTM C-330).

In addition to the physical analyses performed by SOR, FFE Minerals analyzed the product to determine crushing strength and moisture absorption. The results of these tests are presented in

Table 24

Scrubber Make-up Water Sample Results

(Source: FAC)

ANALYSIS OF SCRUBBER MAKEUP WATER SAMPLES
JCI/UPCYCLE
AGGREGATE KILN TESTING

SCRUBBER MAKEUP WATER

Sampling date	03/14-16/01 Composite	03/14-16/01 Composite Duplicate	Average
Sampling times	(1)	(1)	
Sampling frequency	120 minutes	120 minutes	
Metals - ug/L			
Aluminum	< 5	12.5	< 9
Antimony	< 5	< 5	< 5
Arsenic	< 10	< 10	< 10
Barium	20.6	20.7	21
Beryllium	< 1	< 1	< 1
Cadmium	< 3	< 3	< 3
Calcium	57200	57000	57100
Chromium	< 5	< 5	< 5
Cobalt	< 5	< 5	< 5
Copper	65.8	62.5	64
Lead	< 3	< 3	< 3
Magnesium	23700	23900	23800
Manganese	< 5	< 5	< 5
Nickel	< 5	< 5	< 5
Potassium	1750	1740	1745
Selenium	< 10	< 10	< 10
Silver	< 5	< 5	< 5
Sodium	4510	4750	4630
Thallium	< 10	< 10	< 10
Vanadium	< 10	< 10	< 10
Zinc	27.4	26.4	27
Iron	12.3	10.7	12
Mercury	0.0016	< 0.0002	< 0.0009
Total Halogens (Cl, Br, and F)- mg/L	0.064	0.14	0.10

Notes:

(1) Sampling was conducted every two hours during air emissions testing and composited for the entire test program: 0800, 03/14/01 - 0600, 03/16/01.

< Indicates below analytical detection limit or a non-detect included in an average.

Table 25

Scrubber Liquor Sample Results

(Source: FAC)

ANALYSIS OF SCRUBBER LIQUOR SAMPLES
JCI/UPCYCLE
AGGREGATE KILN TESTING

SCRUBBER LIQUOR										
Sampling date		03/14/01		03/15/01		03/16/01		03/16/01 Duplicate		Average
Sampling time		08:00		07:00		05:00		05:00		
Metals - ug/L										
Aluminum		2,490		2,640		4,160		2,890		3,045
Antimony	<	50	<	50		199	<	50	<	87
Arsenic	<	100	<	100	<	100	<	100	<	100
Barium	<	100	<	100	<	100	<	100	<	100
Beryllium	<	10	<	10	<	10	<	10	<	10
Cadmium	<	30	<	30	<	30	<	30	<	30
Calcium		14,100		7,340		9,880		9,260		10,145
Chromium		209		178		177		174		185
Cobalt	<	50	<	50	<	50	<	50	<	50
Copper		385		683		507		491		517
Lead		112		128		104		99		111
Magnesium		122,000		89,600		96,400		94,300		100,575
Manganese		332		167		140		120		190
Nickel	<	50	<	50	<	50	<	50	<	50
Potassium		55,400		56,200		65,300		64,100		60,250
Selenium		110	<	100		103	<	100	<	103
Silver	<	50	<	50	<	50	<	50	<	50
Sodium		21,500,000		18,200,000		17,800,000		17,800,000		18,825,000
Thallium	<	100	<	100	<	100	<	100	<	100
Vanadium	<	100	<	100	<	100	<	100	<	100
Zinc		254		266		263		229		253
Iron		1,100		1,090		1,950		1,120		1,315
Mercury		0.48		0.72		0.58		NA		0.59
Total Halogens (Cl, Br, and F) - mg/L		0.29		3.1		4.3		4.7		3.1

Notes:
< Indicates below analytical detection limit or a non-detect included in an average.
NA Not analyzed.

Figure 5

LWA Product Test Results

(Source: SOR Testing Laboratories, Inc.)

SOR TESTING LABORATORIES, INC.

Geotechnical Engineering - Materials Testing - Forensic Studies
98 Sand Park Rd., Cedar Grove, NJ 07009
Tel. (973) 239-6001 — Fax (973) 239-8380

Branch Office:
118 - 120 Sandford St.
New Brunswick, NJ 08903
Tel. (732) 494-2448 — Fax (732) 247-4421

Kamil Sor, Ph.D.
Orhun Sor, P.E.
Peter G. Micklus, P.E.
Yilmaz Arhan, Ph.D.

This report is the confidential property of the Client, and information contained may not be published or reproduced without our written permission.

Client:	F.L. Smidth, Inc.
Project:	Information of Client — (P.O. No. 251-1-8154-08)
Subject:	Laboratory Testing of Lightweights
Job No.:	01-117 Report No.: 01-1751 Date: 9 April, 2001

We present herewith, laboratory test results of the lightweight aggregate sample 3-19-2001. At the client's request, the sample was tested for a series of properties as specified in ASTM-C330.

TEST RESULTS

1. Gradation (ASTM-C136)

Sieve Size	Results	ASTM-C330 Requirements Size # 1" to No. 4	Size # 3/4" to No. 4
1"	100.0	95 - 100	100
3/4"	97.3	—	90 - 100
1/2"	7.2	25 - 60	—
3/8"	3.0	—	10 - 50
No. 4	0.1	0 - 10	0 - 15

2. Other Characteristics

Property	ASTM Method	Results	ASTM-C330 Requirements
Unit Weight lbs./cubic feet	C-29	46.6	55 max.
Organic Impurities	C-40	Plat-1 (pass)	Plate-3 max.
Staining & Iron Content	C-641	Light	Heavy Stain
$Fe_2 0_3$, mg		0.32	1.5 max.
Clay Lumps & Friables, %	C-142	None	2 max.
Loss on Ignition, %	C114	0.2	5 max.
Drying Shrinkage, %	C-157	0.032	0.10 max.
Pop-outs	C-151	None	None
Freezing & Thawing, % loss	C-67	0.06	0.5% max.
Thermal Conductivity, K (BTU/hr. (ft^2) (°F/inch thickness)	C-177	2.65	—

CONCLUSIONS

The light weight aggregate sample is suitable for use in concrete. However, the gradation requires an improvement in particle size distribution.

Technician:

Very truly yours,

SOR TESTING LABORATORIES, INC.

Kamil Sor, Ph.D.
President

KS/eb

cc: Client: Attn: Michael Prokesch

Tables 26 and 26A. The results obtained, averaging >214 lb., are considered very good in terms of crushing strength exceeding many lightweight aggregates commercially available. Further the moisture absorption levels are below the generally accepted maximum level range of 15-20%.

4.7.2 Geotechnical Results

STS Consultants, Ltd. provided geotechnical testing services on the LWA produced with the inclusion of dredged material. These tests included: performance of particle size distribution analysis, density determination by compaction and vibratory methods, strength determinations using triaxial compression and direct shear methods as well as utilization of the two compaction methods to compare the values obtained.

In 1993, STS Consultants, Ltd. conducted a laboratory testing program of a lightweight aggregate manufactured by Norlite Corporation. A ¾ inch expanded shale aggregate (made from 100% shale) was used in that testing program. With the permission of Norlite Corporation, STS included the Norlite results in its final report to provide a comparison of the test results to the LWA produced during the Pilot Program. Table 27 provides this comparison. The Norlite LWA was taken directly from their commercial stockpile following final screening and sizing while the JCI/UPCYCLE aggregate underwent manual crushing and sizing procedures. This processing difference produced the gradation variation and coincidently, the density difference.

The maximum density results obtained using the maximum index density test and using the standard Proctor compaction test were 51.0 lb/cf and 52.5 lb/cf respectively, a difference of only 1.5 lb/cf. This difference may be attributed to variations in the test methods and/or to the slight break down of the aggregate using the specified impact compaction method.

The two direct shear test results were also very close. The vibratory method of compaction yielded a friction angle of 47.5 degrees while the tamping method of compaction yielded a 46.0 degree angle. Again, the different compaction methods had little influence on the test results.

Several factors influence the friction angle developed through the direct shear test. The particle shape may permit the particles to interlock more readily. The maximum particle size as well as the particle size distribution can influence shear resistance. The shearing process may contribute to particle break down. Normal stresses also may affect friction angle development. As normal stresses increase, the friction angle has a tendency to decrease that may be attributable to particle size break down in certain aggregates. Ultimately, each material is unique concerning the normal stress and the resulting friction angle.

From a geotechnical use perspective, project specifications are traditionally tailored to the specific project. STS Consultants' experience, however, indicates that project specifications often require a minimum friction angle of 35 degrees for materials to be used for embankments or reinforced walls. The aggregate produced during the Pilot Project falls well beyond the 35-degree requirement.

The consolidated drained triaxial test results were almost identical for the two compaction methods employed. A friction angle of 38.5 degrees was determined for the vibratory compacted samples versus a friction angle of 38.0 degrees for the tamped specimens. Any influence due to the compaction methods was not apparent. Both specimens displayed little material degradation during the shearing process as indicated by the particle size distribution curves.

Table 26

LIGHTWEIGHT AGGREGATE PRODUCTS
COMPRESSIVE STRENGTH COMPARISON

PLANT	COMPRESSION lbs.	RANGE lbs.	COARSE BULK DENSITY lb/cf	END USES
A	131	103-169	55.0	Block & Limited Structural
B	177	138-236	50.7	Block
C	197	133-250+	41.0	Structural
D	128	70-180	34.1	Block
E	183	155-205	38.2	Block & Structural
F	165	110-205	35.0	Block
G	86	61-101	45.0	Fly Ash Block Product
UPCYCLE Mix #4[1]	197+	175-230+	34.0	Structural and Geotechnical Fill
UPCYCLE Mix #5[1]	230+	230+	41.8	Structural and Geotechnical Fill
UPCYCLE Mix[2]	>214	>210->219	40.0	Structural and Geotechnical Fill

Notes: [1]Data from Fuller Company and UPCYCLE Testing @ Fuller (8/98)
[2]Data from Fuller Company and JCI/UPCYCLE Testing @ Fuller (3/01)
[3]Data from Port Authority of NY&NJ Testing (12/98)

Table 26A

LIGHTWEIGHT AGGREGATE PRODUCTS
ABSORPTION COMPARISON

	ABSORPTION (Total Minimum – Weighted %)	TESTING SOURCE
UPCYCLE Mix #5[1]	11.37	Fuller
UPCYCLE Mix #5[3]	12.8	Port Authority of New York & New Jersey
UPCYCLE Mix[2]	10.51	Fuller

Notes: [1]Data from Fuller Company and UPCYCLE Testing @ Fuller (8/98)
[2]Data from Fuller Company and JCI/UPCYCLE Testing @ Fuller (3/01)
[3]Data from Port Authority of NY&NJ Testing (12/98)

Table 27

Comparison of LWA Geotechnical Test Results

Test	Upcycle LWA	Norlite LWA	
Minimum Density ASTM D-4254	41.6 lb/ft^3	39.2 lb/ft^3	
Maximum Density ASTM D-4253	50.95 lb/ft^3	40.6 lb/ft^3	
Gradation ASTM C136			
Sieve Size	% Passing	% Passing	Spec. % Passing
1"	100	100	100
3/4"	98.7	99	90-100
1/2"	39.9	73	----
3/8"	35.0	16	10-50
# 4	18.9	8	0-15
# 10	13.5	8	
# 20	8.4	8	
# 40	4.6	8	
# 60	2.9	8	
# 100	1.9	7	
# 200	0.8	7	
Direct Shear Test	47.5 deg. Vibratory	N/R	
	46.0 deg. Tamping	N/R	
Consolidated Drainage Triaxial Test	38.5 deg.	37.0 deg.	
	38.0 deg.	39.0 deg.	

Notes:
1. N/R = no result. Test not performed
2. Upcycle Data fro STS Consultants, Ltd. Proj. # 31870 June, 2001
3. Norlite Data courtesy of Norlite Corp. From STS Consultants, Ltd. Proj. # 27733 Dec. 1993

When compared with the Norlite test results, the JCI/UPCYCLE samples fall between the two values determined for the Norlite program, i.e., 37.0 and 39.0 degrees. The Norlite LWA resulted in deviator stresses slightly higher than those obtained for the JCI/UPCYCLE aggregate. The maximum deviator stress developed with Norlite LWA at a 2.0 ksc. confining pressure was 8.03 ksc. The highest value for the JCI/UPCYCLE aggregate at the same confining stress was 7.39 ksc. approximately 8 percent lower. This difference may be attributable to the compressive strength of the individual aggregate pieces. The results show the aggregate produced from extruded pellets during the Pilot Project appear to have similar strength characteristics when compared to the Norlite LWA.

Overall, the test results indicate the JCI/UPCYCLE material to provide repeatable test results and to compare favorably with the control specimens, i.e., Norlite LWA produced solely from shale.

STS Consultants, Ltd. final report titled "Laboratory Testing Program of UPCYCLE Lightweight Aggregate for the Sediment Decontamination Pilot Project – STS Project No. 31870", revised June 21, 2001, is included in the Appendix.

4.8 Other Lightweight Aggregate Product Evaluation Results

4.8.1 Port Authority of NY& NJ

The Port Authority Materials Engineering Laboratory performed aggregate, concrete mix design and concrete testing of the LWA product. Hampton-Clarke/Veritech Labs performed environmental testing for contaminants in the aggregate with the results evaluated by the Port Authority Chemical and Environmental Laboratory.

The principal conclusion drawn from the Port Authority's test program is that the JCI/UPCYCLE aggregate exhibited physical characteristics desired for a construction grade lightweight aggregate. Further, from an exposure standpoint, based on the chemical analytical data obtained, the PA also concluded that the LWA may be viewed as non-toxic.

The Port Authority's complete report is included in the Appendix.

4.8.2 New York State Department of Transportation

The NYSDOT Materials Bureau tested a sample of the LWA for informational purposes only. Their test report is included in the Appendix.

The limited NYSDOT testing included an evaluation of Soundness (ASTM C-88) by the Magnesium Sulfate method and of Abrasive Resistance (ASTM C-131, B grading) by the Los Angeles Abrasion method. The results obtained by NYSDOT on the JCI/UPCYCLE sample can be compared to results for an available lightweight aggregate and to natural granular fill. The Soundness results were a 1.7% loss for the JCI/UPCYCLE sample versus 5.1% and <6% losses for available LWA and natural granular fill respectively. Similarly, for Abrasive Resistance, the results were 31.1% for the JCI/UPCYCLE sample and 32% and 30-45% for the respective comparison materials.

While limited in scope, the results obtained by the NYSDOT confirm the equivalency of JCI/UPCYCLE LWA to commercially available aggregate.

4.8.3 New Jersey Department of Transportation

The NJDOT Division of Materials tested a sample of the LWA solely for informational purposes. Their test report is provided in the Appendix.

The NJDOT testing was performed under NJDOT specifications generally utilizing American Association of State Highway and Transportation Officials (AASHTO) specifications that may vary slightly from ASTM specifications. The tests performed included gradation, Soundness by the Sodium Sulfate method, Abrasive Resistance, unit weight as well as staining and iron content. The gradation test accommodated the available sieving equipment and did not necessarily conform to the AASHTO requirements for coarse aggregate.

The result for the Soundness test was within the acceptable limit with a 1.6% loss as compared to the maximum 10% loss. Similarly, the Abrasive Resistance test result was within acceptable limit recording a 31% loss in the LWA product as compared to the maximum allowable loss of 40%.

The one questionable result is that for iron content. While NJDOT acknowledged that the test may not have been performed correctly, the iron test result is reported as 60000 mg/200 gram sample, far in excess of the specification of 1.5 mg/200 gram sample. For comparison and reference purposes, SOR Testing Laboratories performed a staining and iron content test according to ASTM C-641. SOR's results show that the aggregate met the requirements imposed under ASTM C-330.

While limited in scope, NJDOT concluded that the results obtained are sufficient to warrant and to support a comprehensive test program when sufficient quantities of product are available.

4.9 Data Validation Assessment – Rotary Kiln Processing

The analytical testing results were subjected to independent data validation by the New Jersey Institute of Technology's Center for Environmental Engineering and Science. The principal data validator was Mr. Gerard F. McKenna. NJIT's report is included in the Appendix.

NJIT's evaluation included a review of background documents including sampling workplans, Quality Assurance/Quality Control plans, analytical methodologies used, and federal/state data quality evaluation guidelines. Data results and supporting documentation were assessed using appropriate Data Validation Guidelines (DVG) where available. When DVG's were not available, then professional judgment was used.

Specific items included in the review and evaluation included:

- Initial Calibrations
- Continuing Calibrations
- Matrix Spikes
- Matrix Spike Recoveries
- Surrogate Spike Recoveries
- Blanks including Field Blanks
- Internal Control Samples
- Sample Integrity (Temperature Maintenance)

Based on the review of the data, the independent validation concluded the data was generated in an acceptable manner. In addition to the data, Laboratory Case Narratives and Internal Data were also reviewed. The review was in general concurrence with the Case Narratives and Internal Data and is based on the selection of methods, QA/QC protocols and the general professional practices that were employed.

4.10 Fate Assessment Projection Requirement – Mercury and PCBs

A submittal/action item contained in the Facility Specific Requirements of the Air Pollution Control Pre-Construction Permit and Certificate to Operate ("APCP Permit") for the Pilot Sediment Decontamination Project issued by the State of New Jersey Department of Environmental Protection, called for the projection of the ultimate fate of mercury and PCBs in the dewatered dredged material filter product as well as including the results of any stack emissions tests and any further product sampling conducted at the source thermally processing the dewatered dredged material.

A detailed discussion in an earlier portion of this report deals with the initial chemical analysis results for the mercury content of the as-dredged material (in-situ), and with related issues pertaining to the operation of the briquetter, with specific issues relating to the selected lightweight aggregate processing facility, and with the resultant agreed to changes to the Pilot Project Work Plan due to these issues.

Stack test and process material sampling results for all streams for both mercury and PCBs are also presented in prior sections of this report.

4.10.1 Fate Assessment – Mercury

The distinct process steps of the technology, i.e., the pre-kiln (non-thermal dewatering step) and the kiln (thermal) processing stages, necessitate addressing the issue of mercury fate assessment separately. While the data provide some insight into the fate of mercury, they are inconclusive in providing absolute determinations. The dredged material matrix, relatively low mercury concentrations and forms of mercury that may have been present, i.e., inorganic mercuric salts or organomercurics, and analytical methods all contribute to the uncertainty of the fate assessment.

However, the interpretation of the data does suggest that in the absence of any thermal actions occurring in the pre-kiln step of the process, the dewatering process does not contribute substantially to the emission of mercury into the atmosphere. Rather, the mercury in this marine environment and form was adsorbed onto the fine dredged material particles and largely remained on the fine particles during the dewatering step. The purposely selected and designated low temperature used for the drying and grinding step preceding pellet formation, i.e., the hammermill dryer/grinder step, limited mercury emissions to atmosphere. Based on a mercury balance of the hammermill system using the most conservative calculation, <6.2% of the mercury input was emitted to atmosphere. Mercury did volatilize within the rotary kiln as would be expected to occur within the envelope of the kiln's operating temperature range. The kiln's pollution control system was somewhat effective in removing mercury from the air stream with the calculated removal efficiency across the pollution control system (measured at the gas exit of the kiln and at the scrubber exhaust to atmosphere) approaching 61.7%. Additionally, due to condensation of the gas stream, mercury was collected in the scrubber liquor and on the fine fraction of particulate collected in the ceramic filter based on the mercury concentrations

measured at these locations. The TCLP mercury analysis of the aggregate product and of the filter fines indicated that the mercury results were well below the established TCLP regulatory limit for mercury.

The mercury concentration levels in the pre-kiln step of the as-dredged sediment (in-situ) ranged from 4.6 to 5.2 mg/kg (dry) with an average concentration level of 4.93 mg/kg (dry). The resulting dewatered dredged filter cake had an average mercury level of 3.8 mg/kg (dry) while the water collected from the dewatering process had an average mercury concentration of 1.4 ug/L (ppb). Approximately 78.5% of the mercury can be accounted for in a macro based material balance when taking into the calculation the quantity of as-dredged material processed, the quantity of filter cake produced, their respective moisture contents, and the volume of process liquid collected. In order to more fully account for the fate of mercury from the dewatering process, a more rigorous sampling plan including additional sampling points and additional samples will be developed with the input and assistance of NJDEP and EPA/BNL personnel for implementation in the larger scale Demonstration Project.

Drying and grinding of the dewatered filter cake was required to achieve a homogenous product suitable for extrusion and pelletizing prior to kiln processing. This drying and grinding step was accomplished in the hammermill dryer/grinder system where the outlet temperature to this system was maintained between 80-90°C. This temperature range was selected purposely in order to minimize mercury emissions from the system while still providing the necessary degree of material drying.

Based on the average feed conditions to the hammermill of 545 lb/hr of dewatered dredged material filter cake at an average of 3.8 mg/kg (dry) mercury, emissions to atmosphere at the outlet stack of the baghouse were found to be $<5.52 \times 10^{-5}$ lb/hr or approximately <6.2% of the input quantity. Again, this calculation utilized the most conservative approach. Alternately, should the one questionable sampling result be eliminated due to the potential interference of blank contamination, mercury emissions to atmosphere decrease to $<1.5 \times 10^{-6}$ lb/hr or <0.17% of the input mercury amount.

The dried and ground dewatered dredged material filter cake was mixed with ground shale and water and extruded to form the pellet that was fed to the kiln. The ratio on a dry basis of this mix was 70% dredged material/30% shale. The resulting pellets were analyzed and found to contain an average of 2.338 mg/kg (dry basis) of mercury. Based on this mix design, the calculated value and the actual analyzed value for mercury in the pellets are in close agreement (calculated 2.359 mg/kg vs. 2.338 mg/kg as measured).

The kiln processing step involved the following inputs and outputs. The feed pellets to the kiln and the make-up water to the scrubber were the system inputs while the outputs included the aggregate product, ceramic filter fines catch, gaseous emissions to atmosphere from the scrubber outlet and the collected scrubber liquor. Based on an average feed rate of pellets to the kiln of 42.8 lb/hr at 14.3% moisture, the hourly emissions to atmosphere measured at the scrubber outlet were 1.71×10^{-5} lb/hr. Analyses of the samples collected at the gas exit of the kiln (or the kiln scrubber inlet) averaged 4.46×10^{-5} lb/hr resulting in a calculated control efficiency of the kiln scrubber system of 61.7% for mercury.

Correspondingly, the aggregate product was found to contain <0.147 mg/kg (dry) of mercury at an average production rate of 32.7 lb/hr of aggregate product. The individual sample results (also on a mg/kg dry basis) were: <0.25, <0.25, 0.054 and 0.034 respectively. The method

detection limit (MDL) for all samples was 0.25 mg/kg. The < symbol is indicative of a result that was below the MDL or a non-detect value included in an average reported value. A review of the laboratory data package revealed that in both cases where the reported analytical value was given as <0.25 mg/kg, the actual result was non-detect. However, in keeping with the convention stated above, the MDL was used in the average value. As may be the case for this instance and many others throughout the report, the reported average value may overstate the actual concentration of a particular analyte.

The ceramic filter fines measurements for mercury ranged between 6.0 mg/kg to 9.4 mg/kg (dry), averaging 8 mg/kg (dry) at a collection rate of 0.1 lb/hr.

The make-up water, of which 3,356 pounds was added to the scrubber during the course of processing, was found to contain an average of <0.0009 ug/L of mercury, an inconsequential amount on a mass basis. The scrubber liquor collected over the entire processing campaign was 745.8 pounds and showed an increased level of mercury from the first to the second sample, 0.48 ug/L to 0.72 ug/L, and then decreased to 0.58 ug/L for the third sample. The increased mercury concentration level from the first sample to the second sample was expected and deemed attributable to the condensation and collection of mercury in the scrubber liquor over time. The decrease in mercury concentration in the third and final sample to 0.58 ug/L was not anticipated. A review of the mercury related data for the time related gaseous loadings and emissions for the scrubber and for the various process samples did not provide any discernable rationale for this occurrence. The concentration of mercury in the feed pellets for the second and third samples decreased slightly from 2.42 mg/kg (dry) to 2.36 mg/kg (dry). However, the mercury loading at the scrubber inlet actually increased from 4.05×10^{-5} lb/hr to 4.64×10^{-5} lb/hr while the corresponding emissions at the scrubber outlet decreased to 7.31×10^{-6} lb/hr and 6.38×10^{-6} lb/hr for these samples periods.

The concentration levels of mercury in the wet scrubber liquor indicate that some quantity of the volatilized mercury was captured due to condensation in the liquor as seen at least initially from the increased concentration over time in the scrubber liquor. Further, the higher levels of mercury in the ceramic filter fines over those in the aggregate product (average reported values of 8.7 mg/kg (dry) versus <0.147 mg/kg (dry)) also seems to indicate that some of the volatilized mercury was captured on the filter fines due to condensation and adsorption on their large surface area. However, the actual quantity of mercury in these two streams is extremely small given their minimal mass. The entire amount of ceramic filter fines collected was only 11.1 pounds for the entire campaign while the total amount of scrubber liquor was less than 750 pounds.

The aggregate product and ceramic filter fines catch were both subjected to TCLP and MEP metals analyses. The aggregate product TCLP results were <0.0005 mg/L, i.e., below the analytical detection limit, while the MEP results, with the exception of one sample in the second extraction, were all <0.0002 mg/L, again below the analytical detection limit. This one exception resulted in an analytical result of 0.0005 mg/L, not a significant deviation. For the ceramic filter fines, the TCLP results varied over the three samples analyzed, with an average of 0.0458 mg/L, still below the established regulatory limit of 0.2 mg/L. The MEP analyses varied over the nine extractions with the highest value being reported for the initial extraction of 0.0082 mg/L decreasing to averages being below analytical detection limits for all extractions after the fourth extraction.

On an hourly basis, the mercury control efficiency for the pollution control system was approximately 61.7%, within the range (50-85%) typically seen for a system of this type. On an overall basis, 26.5% of the mercury input to the kiln processing system was accounted for in all of the outputs from the system. Given that no spiking was done for mercury in the feed pellets, that values used in calculations include detection limit values for non-detect results in the averages, that the analytical procedures may not accurately or completely measure mercury in its various inorganic and organic forms, it is difficult to provide further closure on an overall process mass balance.

The analytical results generated during the Pilot Project are based on a single set of sampling data. The evaluation of this data is limited to simple assessment mechanisms and not to complex modeling techniques. Consequently, any conclusions drawn from the fate assessment evaluation should be narrow in scope and in interpretation and be limited to and by the process and technology. As previously noted, it is planned to work with NJDEP and EPA/BNL to develop and incorporate in the Demonstration Project a more rigorous analytical program for the purpose of quantifying the fate of mercury from all phases of the process technology.

The data, calculations and results presented above are summarized in Table 28.

4.10.2 – Fate Assessment – PCBs

In undertaking a similar fate assessment review for PCBs, the distinct steps of the process were again individually reviewed. As was the case for mercury, the dredged material matrix and the relatively low apparent concentrations of PCBs in the dredged material contribute to the quality of the fate assessment.

For the pre-kiln (non thermal) stage of the process, the as-dredged material, dewatered filter cake product and the resulting dewatering process water were all analyzed for PCB aroclors. All results were non-detect, i.e., below the analytical detection limit. However, several PCB congeners were detected in both the as-dredged sediment and in the dewatered filter cake.

The hammermill drying and grinding step for the dewatered filer cake was not analyzed for PCB aroclors based on the low inlet temperature to the mill, 80-90°C specifically chosen to be below the volatilization range for PCB aroclors.

The dried and ground dewatered dredged material filter cake was mixed with ground shale and water and extruded to form the pellet that was fed to the kiln. The ratio, on a dry basis, of this mix was 70% dredged material/30% shale. The resulting pellets were analyzed and found to contain an average of 0.26 mg/kg (dry) total PCBs. The fact that PCB aroclors were measured in the extruded feed pellets, albeit at low levels, and not in either the as-dredged material (in-situ) or in the dewatered filter cake reinforces the analytical problems due to matrix interferences and minute actual concentrations.

Similar to mercury, the kiln processing step involved the following input and outputs from the system. The feed pellets to the kiln were the sole system input with measured PCBs while the outputs included the aggregate product, ceramic filter fines catch, gaseous emissions to atmosphere from the scrubber outlet and the collected scrubber liquor. Based on an average feed rate of 42.8 lb/hr of pellets to the kiln, the hourly emissions to atmosphere from the scrubber outlet for total Mono, Di, Tri, Tetra, Penta, Hexa, Hepta, Octa and Nonachlorobenzenes congeners averaged 5.2×10^{-8} lb/hr. Since aroclors are a mixture of various PCBs and thermal

Table 28

Fate Assessment Evaluation - Mercury

Basis: Equivalent quantity of as-dredged material used for the kiln processing test

1. Pre-Kiln Processing

	Average Concentration	Quantity	Moisture Content
As-Dredged Sediment	4.93 mg/kg (dry)	5810 pounds	51.85%
Dewatered Filter Cake	3.8 mg/kg (dry)	6504 pounds	57%
Process Water	1.4 ug/L	18,000 gallons	

Input to Dewatering System: $5810 \times (1 - .5185) \times (4.93 \times 10^{-6}) = 0.0138$ pounds

Output from Dewatering System: $6504 \times (1 - .57) \times (3.8 \times 10^{-6}) = 0.01063$ pounds
18000 gallons x 8.34 lb/gal x $(1.4 \times 10^{-9}) = 0.0002$ pounds

Total Output: 0.01083 pounds

Mercury Accounted: 0.01083 / 0.0138 x 100 = 78.5%

2. Kiln Processing

2.1 Hammermill Drying

Dewatered Filter Cake	3.8 mg/kg (dry)	545 lb/hr	57%

Input to Hammermill Dryer: 545 lb/hr x $(1 - .57) \times (3.8 \times 10^{-6}) = 0.00089$ lb/hr

Emission to Atmosphere: $<5.52 \times 10^{-5}$ lb/hr

Percent Emitted to Atmposphere: $(<5.52 \times 10^{-5}) / 0.00089 \times 100 = <6.2\%$

Table 28 (continued)

2.2 Kiln Processing

	Average Concentration	Quantity	Moisture Content
Feed Pellets	2.338 mg/kg (dry)	42.4 lb/hr	14.3%
Loading to Scrubber	2.76×10^{2} ug/dscm @ 7% O_2	4.46×10^{-5} lb/hr	
Emission to Atmosphere from Scrubber	41.8 ug/dscm @ 7% O_2	1.71×10^{-5} lb/hr	
Aggregate Product	<0.147 mg/kg (dry)	32.7 lb/hr	0%
Ceramic Filter Fines	8 mg/kg (dry)	0.1 lb/hr	0%
Scrubber Liquor	0.59 ug/L	745.8 pounds	

Input to Kiln System: $42.4 \text{ lb/hr} \times (1 - .143) \times (2.338 \times 10^{-6}) = 8.576 \times 10^{-5}$ lb/hr

Outputs from Kiln System

- Emission to Atmosphere: 1.71×10^{-5} lb/hr
- Aggregate Product: $32.7 \text{ lb/hr} \times (<0.147 \times 10^{-6}) = <4.81 \times 10^{-6}$ lb/hr
- Ceramic Filter Fines: $0.1 \text{ lb/hr} \times (8 \times 10^{-6}) = 8 \times 10^{-7}$ lb/hr
- Scrubber Liquor: $745.8 \text{ lb} \times (0.59 \times 10^{-9}) = 4.4 \times 10^{-7}$ lb
  $4.4 \times 10^{-7} \text{ lb} / 90 \text{ hr} = 4.89 \times 10^{-9}$ lb/hr

Total Outputs: 2.27×10^{-5} lb/hr

Scrubber Control Efficiency: $(4.46 \times 10^{-5} - 1.71 \times 10^{-5}) / 4.46 \times 10^{-5} \times 100 = 61.7\%$

Overall Mercury Accounted: $2.27 \times 10^{-5} / 8.576 \times 10^{-5} \times 100 = 26.5\%$

processing breaks down the aroclors into their respective constituents, aroclors no longer exist after thermal treatment. Therefore, the analyses were performed to measure the respective congeners. Based on the average feed rate and total PCB concentration of the feed pellets, 99.45% destruction and removal efficiency was achieved. On a commercial scale, an afterburner specifically designed for organic constituent removal, i.e., residence time, turbulence and temperature, should obtain even greater destruction and removal efficiency.

It is proposed to work with NJDEP and EPA/BNL personnel during the Demonstration Project to develop a program and method to further quantify the fate of PCBs from the overall process.

Concurrently, the pollution control system was able to effectively handle halogens that may have dissociated from the PCBs as well as being present from other sources. The feed pellets contained an average of 0.32% by weight total chlorine and the fuel oil used for firing the process contained 0.06 % by weight total chlorine. At the scrubber outlet, both HCl and total chlorine emissions averaged below the minimum detection limit. Based on total chlorine, the pollution control system achieved >99.98% control.

The aggregate product and ceramic filter fines catch were analyzed for the presence of PCBs. All results were non-detect, i.e., below the analytical detection limit.

Given these results and coupled with the temperature profile within the kiln and the use of the afterburner as a component of the pollution control system, it is reasonable to surmise that being reduced to their elemental state destroyed the PCBs along with effectively controlling any resultant halogens.

Table 29 summarizes the data, calculations and results discussed in this section.

5.0 Economic Analysis

The economic analysis is based on the technical results obtained during this Pilot Project and is predicated on a number of assumptions and variables as outlined below. Although there are many parameters that can materially affect the overall process cost, the Pilot Project has allowed many of these variables to be quantified and therefore, narrows the range of uncertainty.

While the pilot processing of marine sediments cannot completely identify every variable, it can provide a database upon which high probability performance characteristics and cost estimates can be developed. Specifically, the surface chemistry of the sediment particles and the rheology of the resultant dewatered sediment product are usually consistent within a naturally occurring water body. The correlation between field data and actual operating performance compared well with the performance predicted a priori by bench-scale laboratory tests. This correlation is key in estimating the commercial cost of the solid/liquid separation and dewatering (pre-kiln processing) phase of the technology.

Similarly, the results achieved during the rotary kiln processing phase of the Pilot Project corroborated the laboratory study successfully demonstrating the production of lightweight aggregate meeting applicable ASTM standards from dewatered dredged material feedstock. Applying the kiln system material balance for the specific dredged material/raw shale ratio feedstock used during the pilot processing, enables commercial scale estimates of the quantities

Table 29

Fate Assessment Evaluation - PCBs

Basis: Feed material used for the kiln processing test

1. Pre-Kiln Processing

	Average Concentration
As-Dredged Sediment	Non-Detect
Dewatered Filter Cake	Non-Detect
Dewatering Process Water	Non-Detect

2. Kiln Processing

2.1 PCBs	Average Concentration	Quantity	Mositure Content
Feed Pellets	0.26 mg/kg (dry)	42.8 lb/hr	14.3%
Aggregate Product	Non-Detect		
Ceramic Filter Fines	Non-Detect		
Emissions to Atmosphere		5.2×10^{-8} lb/hr	

Input to Kiln System
Feed Pellets: $42.4 \text{ lb/hr} \times (1 - .143) \times (0.26 \times 10^{-6}) = 9.448 \times 10^{-6}$ lb/hr

Output from Kiln Scrubber: 5.2×10^{-8} lb/hr

Control Efficiency: $[(9.448 \times 10^{-6} - (5.2 \times 10^{-8})] / [9.448 \times 10^{-6}] \times 100 = 99.45\%$

Table 29 (continued)

2.2 Halogens (as Total Chlorine)

	Average Concentration	Quantity
Feed Pellets	0.32% w/w	42.4 lb/hr
Fuel Oil	0.06% w/w	15.7 lb/hr
Emissions to Atmosphere		$<4.61 \times 10^{-5}$ lb/hr

Input to Kiln Sysytem	
Feed Pellets	42.4 lb/hr x 0.0032 = 0.1357 lb/hr
Fuel Oil	15.7 lb/hr x 0.0006 = 0.0094 lb/hr
Total Input to Kiln System	0.1451 lb/hr
Output to Atmosphere	$<4.61 \times 10^{-5}$ lb/hr
Control Efficiency	$[0.1451 - 4.61 \times 10^{-5}] / 0.1451 \times 100 = 99.98\%$

aggregate meeting applicable ASTM standards from dewatered dredged material feedstock. Applying the kiln system material balance for the specific dredged material/raw shale ratio feedstock used during the pilot processing, enables commercial scale estimates of the quantities of as-dredged material that may be ultimately utilized at an operating lightweight aggregate manufacturing plant.

As a consequence of the Pilot Project, a cost estimate can be projected based on the following bases and battery limits.

Bases and Battery Limits

1. Minimum Annual Volume – 500,000 cubic yards (in-situ) of dredged material
2. Supply Term – 30 years
3. Quality of Dredged Material – Surface chemistry, rheology and levels of contaminants is typical of the sediment utilized during the Pilot Project
4. Dredging and Delivery of the Dredged Material to the Dewatering Site – By others and not included
5. Material Analytical/Characterization Costs – Dredged material (in-situ) is fully analyzed by the material's owner. Costs provided are for minimal confirmatory analysis and for required analyses of the dewatered filter cake.
6. Mix Design of the Feed to the Kiln – Similar to that utilized during the Pilot Project
7. Regulatory operating requirements are typical to those of existing facilities without the imposition of extraordinary limits or conditions

The total projected cost, on an in-situ cubic yard basis, is estimated to be $42.32. Figure 6 presents a line item breakdown of this projected total cost.

The commercial business model for the estimate is based on the development and creation of a new solids/liquid separation and dewatering facility (S/L-S&D) within the Port region with the resultant dewatered dredged material being shipped to an existing lightweight aggregate manufacturing facility either by rail or truck. The estimate is further premised on the dredging being done by others and the dredged material being delivered F.O.B. to the S/L-S&D facility.

The premise for the "30 year term" for sediment receipt comes from initial guidance suggested by NJMR in Addendum #1(dated 4/20/98) to the original RFP. Specifically, the Addendum provides answers to questions raised by potential RFP respondents. In this case, the answer to question #40 (page 13 of 16) states: "For the purpose of costing the full-scale plant assume 30 years." The basis for the 30 year term is again reinforced by the answer to question #124 (page 29 of 36) that states: "We expect it will take a minimum of 30 years to clean up the Harbor sediments."

The major operating cost items are for: solid/liquid separation and dewatering, transportation to the kiln and kiln facility "tip-fee". The solid/liquid separation and dewatering cost is based on a proposal by Operations Services Corporation (OSC) and projected economies of scale to be realized at a volume of 500,000 cubic yards per year. Given the field data and operating performance obtained during the Pilot Project, OSC developed a commercial cost estimate predicated on processing 500,000 cubic yards (in-situ) per annum of dredged material with operations being conducted on a 24-hour day, 5 day per week schedule. OSC's estimate is inclusive of the following components:

Figure 6

Projected Cost Estimate
Commercial Scale Operation

	$/cubic yard	
1. Pre-Kiln Processing/Dewatering		
Direct Costs		
Material Analysis/Characterization	0.50	Confirmatory Analytical Work
Material Unloading from Barge	1.75	Offload by Crane or Pump
Solids/Liquid Separation & Dewatering	7.25	Based on quote from OSC and projected economies of scale from 500K cu yd/yr Includes eqp't., labor, utilities & chemicals
Treatment/Disposal of Effluent Liquid	1.50	Includes testing costs
Disposal of Debris	0.75	
Material Handling/Storage/Loading	3.00	Movement of filter cake to storage prior to transport/loading for transport
Indirect Costs	3.00	Property/Building & Structures Cost for field office/lab/processing eqp't. - 25K sq ft
	1.00	Tankage for intermediate storage of a as-dredged material
2. Transportation to Kiln	11.25	Quote from CSX Rail and projected economies of scale
3. Kiln Processing	3.30	Unloading/internal movement & storage at facility, drying/grinding, extrusion, pelletization and kiln processing
4. LWA Product Testing	0.50	
5. Supervision and Engineering	2.00	On-site supervision, engineering, administrative and lab personnel
6. Host Fee for Town/City	1.00	Linkage
7. JCI/UPCYCLE Overhead (5%)	1.84	
JCI/UPCYCLE Margin (10%)	3.68	
Total Cost per Cubic Yard	**$42.32**	

Notes:
1. Estimate is based on an annual volume of 500,000 cubic yards (in-situ)
2. Dredging cost and delivery to dewatering site by others and not included
3. Material Analysis/Characterization costs presume full analysis of the as-dredged material by the owner of the dredged material. Costs cover confirmatory analytical work and required analyses of the filter cake product
4. Estimated projected costs to be confirmed via Demonstration Project

1. Design, procurement, installation and commissioning of all S/L-S&D equipment
2. Staffing and oversight of the S/L-S&D operation exclusive of barge unloading and dewatered product movement
3. Provision of all power, water, chemicals and other consumables necessary for the efficient conduct of S/L-S&D operations

The transportation cost estimate is based on the predicted volume of dewatered product to be realized from processing 500,000 cubic yards per annum of as-dredged material through the S/L-S&D facility. The transportation cost assumes that the new S/L-S&D facility is located within the Port Newark region and that the dewatered filter cake is moved approximately 350 miles via rail to an existing lightweight aggregate production plant. CSX Transportation provided the rate and is further predicated on the benefits to be achieved from the contiunal movement of large volumes of material.

The dredged material to be utilized by the LWA manufacturer will substitute for approximately 70% (by weight) of the shale currently being mined and processed by that facility in its production of LWA. As has been discussed in prior sections of this Final Summary Report, the current preferred mix design, based on the Pilot Project work, is 70% dredged material / 30% shale. The dredged material will be provided to the LWA owner/operator at no cost, F.O.B. its plant site. The LWA facility will be responsible for all costs commencing with the acceptance of the dredged material at its facility, i.e., unloading, storage, extrusion, kiln processing, sizing, and ending with the sale and distribution of the final LWA product. The LWA facility will incur additional processing costs not currently associated with its manufacturing process, namely, for: intermediate storage and handling of the dewatered dredged material, drying/grinding of the dredged material, extrusion, as well as added material characterization and environmental monitoring and compliance. These handling and operation costs are captured in and constitute the "Facility Tip Fee" line item.

FFE Minerals, in their Final Project Report, provided a table "Estimated Production Costs for Lightweight Aggregate" with operating cost information from active, commercial LWA manufacturing sites. This data, provided for reference and information only for the operation of a "greenfield" LWA facility, is not included in JCI/UPCYCLE's projected process cost of $42.32/cubic yard. These estimated production costs would be in addition to the capital monies required for site procurement and LWA production facility construction. However, they would be offset by the earned revenue from the LWA sales and by savings in transportation and material handling costs.

The "Host Fee" provided in the estimate is included to compensate the municipalities that host the S/L-S&D and the lightweight aggregate facilities and to allow these communities to undertake small projects to enhance the quality of life for the residents of these locales.

The "Indirect Costs" at the Dewatering site cover the capital investment that will be required to create an S/L-S&D facility within the Harbor region. The facility is assumed to be a 10-acre site with a 25,000 square foot building for administrative, laboratory and processing operations. The size of the dewatering facility includes storage capacity for unprocessed as-dredged material and dewatered filter cake as well as providing sufficient land area for all processing and processing related activities. The specified building size is needed to house the S/L-S&D equipment for operation in all weather conditions and at temperatures below 40°F. It has been assumed that site preparation will involve upgrades to allow product movement by rail, storage facilities for incoming and dewatered dredged material, security and access control etc.

Fixed equipment requirements include initial screening equipment for debris removal from the as-dredged sediment, barge off-loading equipment, material movement equipment (loaders, conveyors), as well as miscellaneous ancillary support items. Notwithstanding the guidance referenced above with respect to the "life or term" of full-scale facilities, the fixed equipment required is amortized over an operating life of 10 years. These fixed costs are combined with their operating labor component and are reported as unit costs ($/cu yd) for the various material handling line items in the estimate.

6.0 Commercial Scale Operations

6.1 Commercial Scale Pre-Kiln Processing (Dewatering) Facility

Figure 7 is a preliminary process flow diagram for a commercial scale solid/liquid separation and dewatering facility capable of processing 500,000 cubic yards/year of as-dredged material. This PFD was developed from the observations and results obtained during the pre-kiln phase of the Pilot Project conducted at the Stratus Petroleum site. The major system components include: two (2) primary dewatering units (1600 gpm capacity, each), two (2) 2 meter belt filter presses, one (1) Flo-line scalper (mounted on the slurry dilution tank), two (2) 40' x 8' open top mix tanks (slurry mixing and dilution tanks), two (2) 40' x 8' open top tanks (recycle water and return water clarifier tanks), two (2) 20' container units (power module and polymer dilution/delivery system), one (1) 24' x 50' radial stacking conveyor (filter cake), as well as miscellaneous transfer pumps, compressors etc. The final system design and equipment configuration is dependent on the site where the dewatering will occur.

The pilot work was instructive in defining the actual and potential sensitivities of the overall dewatering process. The prime objective was to prepare a dewatered filter product with as little free water as possible, i.e., maximum solids content, to enable efficient and economical thermal processing into LWA. Several of the components of the combined technology package are contradictory in nature with respect to establishing the optimum solids concentration within the feed slurry to enable this goal to be achieved. The solid/liquid separation and primary dewatering steps respond best to a feed slurry solids concentration near the top of the established acceptable range, building large stable floccules. The secondary dewatering step, or belt press stage, can accept higher throughput when fed these larger floccule masses. However, large floccule formation is deleterious to filter press cake quality with respect to moisture content. The pilot runs permitted the evaluation of varying feed slurry solids concentrations and observation of the resultant filter press cake quality. Based on the results obtained, a target feed slurry density of 8-10% solids for commercial operation is recommended.

The consumption of polymeric flocculant was between 50-66% of the predicted value based on the initial laboratory evaluation. In addition, the dosing rate was consistent throughout the pilot runs suggesting that polymer consumption did not vary with changes in sediment properties or composition. Further this data suggests that at the increased slurry flow rates at the commercial scale, polymer dosing rates will be stable contributing to steady-state operation.

The well flocculated sediments responded well to the primary dewatering technology. Based on the pilot results, a baseline throughput for the commercial scale operation is estimated to be 375 gpm/10% solids per 30 ft^2 of primary dewatering module separation panel. Flocculant dispersion

Figure 7

Preliminary Process Flow Diagram
Commercial Dewatering Facility

(Source: Operation Services Corporation)

OPERATIONS
SERVICES
CORPORATION

PRELIMINARY PROCESS FLOW DIAGRAM
New Jersey Maritime Resources Sediment Dewatering

11/2000

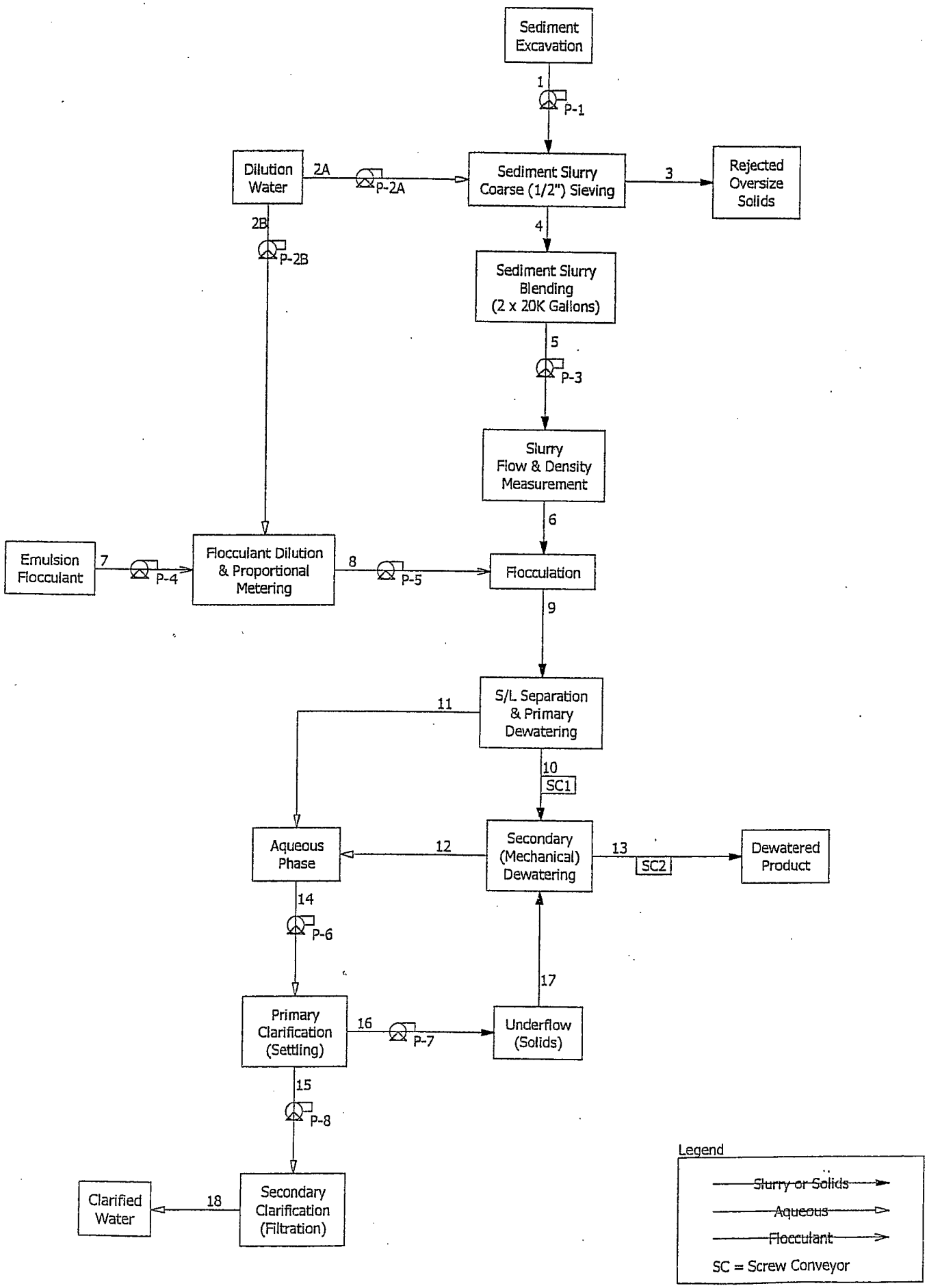

at the baseline mass flow condition was satisfactory and no changes should be required for scale-up.

The secondary dewatering or belt press step did not experience any capacity problems since the unit was deliberately oversized with respect to the primary dewatering module. For the commercial scale operation, a similar over-size consideration is specified to prevent bottlenecking at this critical process step. This over-capacity is provided by modification to the belt press to run at higher maximum belt speeds, and by virtue of the greater belt speed, to offer the desired capacity margin.

The preliminary process flow diagram presented in Figure 7 closely follows the processing plan used during the Pilot Project. The notable changes incorporated for the commercial scale facility are an increased feed slurry surge capacity and the requirement for a continuing discharge of effluent. To provide for proper treatment of the collected aqueous phase, a filtration step has been added prior to discharge.

The inclusion of a second feed surge tank will allow one tank to supply the process while the other tank is filled with slurry thereby permitting a continuous, steady state feed to the system. The collected aqueous phase liquor will be initially clarified by settling as was done in the pilot runs. Because the suspended solids are flocculated at this point, settling will be an effective primary treatment step. As a final treatment step and to further ensure process continuity, the clarifier supernate will be filtered to positively remove any remnant suspended solids.

6.2 Commercial Scale Lightweight Aggregate Facility

A preliminary commercial process layout is provided in Figure 8 capable of producing 14 to 22 tons per hour of lightweight aggregate depending on the size of the commercial rotary kiln. As proposed, the system is configured to enable concurrent operation of the rotary kiln and the hammermill dryer or operation of either of these systems independently of each other. As shown in Figure 8, when both systems are operating the afterburner off gas is directed to the hammermill dryer as its source of heat supply. If the hammermill dryer system is idle, the afterburner off gas is directed to a quench chamber where water is added to reduce the gas temperature to a level that is suitable for handling in the baghouse/scrubber pollution control circuit. When the rotary kiln is idle, all heat required for drying in the hammermill dryer system is supplied using only the afterburner.

The proposed commercial flow diagram is based on the success of the rotary kiln phase of the Pilot Project and closely follows the process used in this phase. The dredged material filter cake and shale fines will be fed into a mixer to produce a homogeneous feed for the hammermill dryer. This mixed material will be dried to a moisture level of 5-10% and all agglomerates and aggregates ground to minus 100 mesh. This dried and ground material will be collected using a cyclone collector and a baghouse. A portion of this dried material will be recycled to the hammermill dryer feed mixer to reduce the moisture level in the dryer feed mix and to improve the flow properties of the material entering the hammermill. Potential particulate emissions from this circuit will be controlled using a well-designed baghouse having a particulate collection efficiency of >99.9% of all particulate 2 micron or greater in size. Further, during stable operation of the hammermill dryer/grinder, no nuisance dust emissions should result as the system will be operated under negative pressure.

Figure 8

Preliminary Process Flow Diagram
Commercial Lightweight Aggregate Facility

(Source: FFE Minerals)

COMMERCIAL LIGHTWEIGHT AGGREGATE PROCESS FLOW DIAGRAM

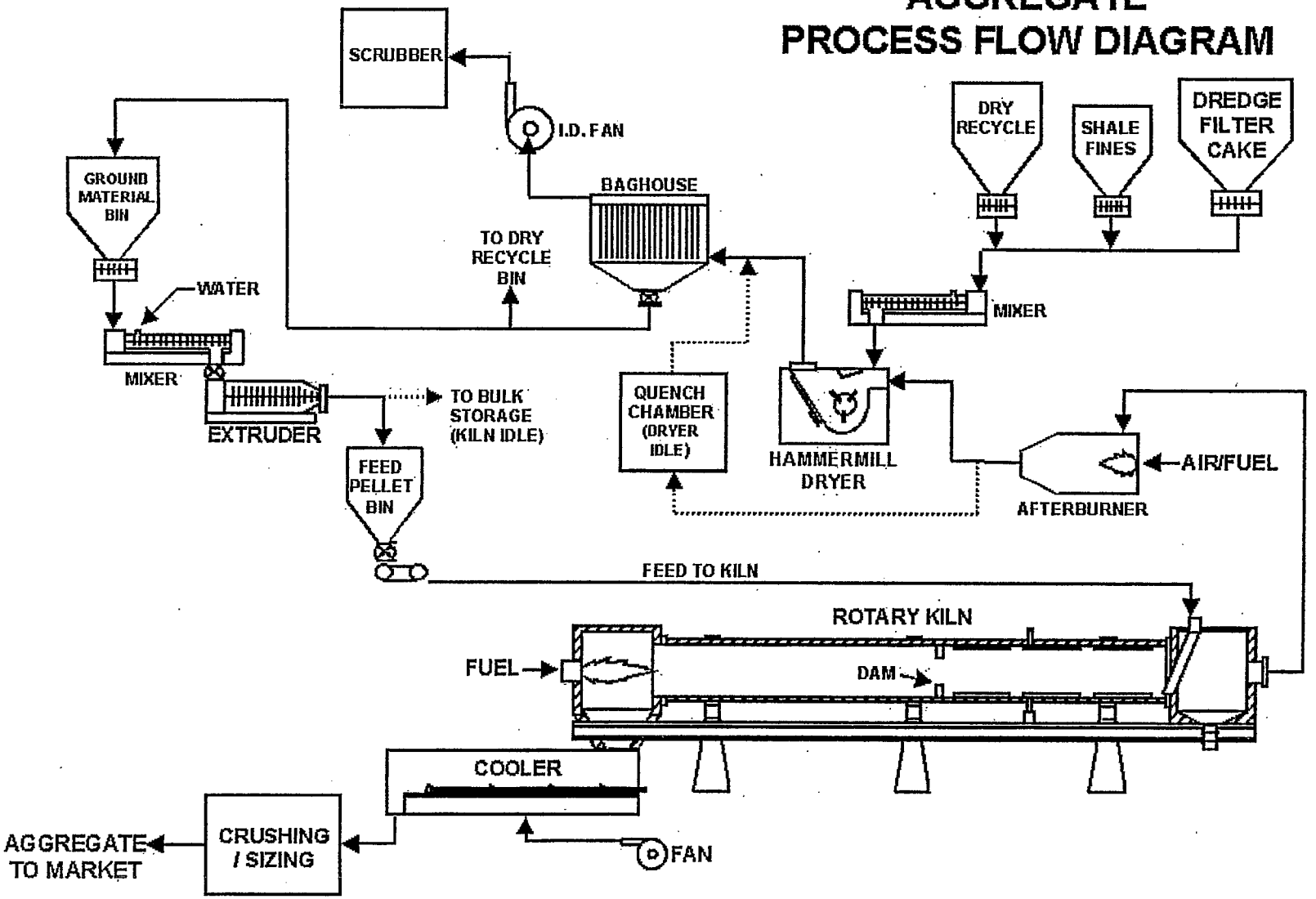

Commercial Process Flow Diagram

The dried and ground material is then sent to an extrusion circuit for pellet formation. Water is added to the dried material to obtain a mix moisture level of approximately 15% necessary to enable the production of strong pellets in the extruder. The wet mix is then extruded to form cylindrical pellets. The final extruded pellet diameter and length will be adjusted to meet commercial end use requirements thereby reducing final crushing, screening and sizing needs to produce the target LWA product gradations. Potential particulate emissions from the extruder circuit will be controlled via the use of bins, rotary airlocks, properly covered conveyors, with venting to a dust collection system.

The extruded pellets will be fed to a conventional counter-current rotary kiln system. Within the kiln, the pellets pass through a preheat zone and then expand within the firing zone to produce LWA "clinker". The LWA clinker will be discharged from the kiln into a clinker cooler that cools the product and recovers heat for the kiln significantly reducing the specific fuel consumption for the process. A portion of the preheated air may be directed to the afterburner to maximize afterburner efficiency. The cooled LWA will then be crushed, screened and sized to produce the required product gradation based on the end use of the LWA.

The kiln off gas will be directed to a high temperature afterburner. Fuel and air are combusted in the afterburner to raise the gas temperature to about 900°C for CO and VOC destruction. In the preferred operating scenario, this hot afterburner gas will be utilized in the hammermill dryer to support the drying heat load, filtered in the main baghouse and then directed to the scrubbing circuit for final pollutant removal prior to exhaust to atmosphere. Alternately, if the rotary kiln is idle, all heat will be supplied to the hammermill system using only the afterburner.

The specific fuel consumption of the pilot rotary kiln was 15.58 MMBTU/st of product. This is considerably greater than the commercial scale kiln specific fuel consumption of approximately 2-2.2 MMBTU/st. This large difference in fuel consumption is directly attributable to the low material loading of the pilot kiln (3.2% of the pilot kiln volume vs. 10-15% of a commercial sized kiln), the high air/solids ratio experienced in the pilot kiln (6.6 vs. 1-2), and lastly to the high shell heat flux in the pilot rotary kiln (71% vs. 5-10%).

Projected comparisons of emission data from the pilot system to those from a commercial LWA facility are presented in Table 30, "Dredge-to-LWA Process Emissions". The higher firing rate in the pilot rotary kiln system must be considered when reviewing and comparing potential NOx emissions. The NOx emission data from a commercial scale LWA rotary kiln process should include an allowance for NOx contribution from the afterburner. Therefore, for these reasons and because the commercial hammermill dryer system will use waste heat from the afterburner, Table 30 excludes the NOx contribution from the hammermill dryer in determining the total pilot system emissions for NOx.

Given the lower specific fuel consumption of the dredged material to LWA process (significantly lower NOx formation) and better performance of specifically designed commercial air pollution control equipment (lower particulate, CO and VOC emissions), the emissions from commercial operations are expected to be comparable to or lower than typical emission levels from conventional commercial LWA kiln systems.

Table 30

Dredge to Lightweight Aggregate Process Emissions

	Pilot Kiln System Emissions lb/ton LWA	Hammermill Dryer Emissions lb/ton LWA	Total Pilot System Emissions lb/ton LWA	Typical Commercial Emissions lb/ton LWA
SO_2	5.71E-02	<6.70E-02	<9.41E-02	4.40E+00
NOx	1.22E+01	3.33E-01	1.22E+01	2.26E+00
CO	1.27E+00	4.00E-01	1.67E+00	9.00E-01
VOC	1.83E-01	<2.00E-01	<3.83E-01	7.00E-02
Total Particulate	8.70E-01	9.33E-01	1.80E+00	7.90E-01
Hg	1.05E-03	<1.00E-05	<1.06E-03	n/a
PCBs	3.20E-06	n/a	3.20E-06	n/a
PCDD+PCDF	1.98E-09	2.47E-10	2.23E-09	n/a
HCl	<3.94E-03	n/a	<3.94E-03	1.46E-02
Cr^6	<2.41E-05	n/a	<2.41E-05	n/a

Notes:
1. From FFE Minerals Final Report - June 2001
2. n/a = not measured or no comparative data

7.0 Conclusions/Recommendations

The Pilot Project successfully demonstrated the production of a quality, marketable lightweight aggregate using a conventional counter-current rotary kiln process coincident with achieving sediment decontamination. The LWA produced satisfied all ASTM requirements applicable for use in concrete with the exception of the gradation standard. An easily made adjustment in particle size distribution via an improvement in crushing, screening and final sizing of the LWA will remedy the gradation issue. The LWA produced passed environmental testing and is considered non-toxic.

In evaluating the results from the Pilot Project, commercialization of the process is considered feasible from technological, product quality and economic standpoints. Supporting JCI/UPCYCLE's assessment, FFE Minerals, in their Final Report, also conclude, "this process could be commercialized from a process and aggregate quality standpoint." The Port Authority of NY/NJ concluded that the LWA product "exhibits the physical characteristics desired for a construction grade lightweight aggregate and that from an exposure stand-point, the material may be viewed as non-toxic."

While meeting the Pilot Project objectives, the test work provided much information and confirmed certain a priori assumptions. The solids concentration of the feed slurry (pulp density) was clearly an area of process sensitivity. The solids/liquid separation and primary dewatering steps respond best to pulp densities near the high end of the established acceptable range. This higher concentration allows for the building of large stable floccules thus resulting in a higher throughput to the belt filter press. However, large floccule formation is deleterious to filter press cake quality with respect to moisture content since the function of the dewatering step is to prepare a cake with as little free water as possible to enable efficient and economical thermal processing of the dredged material into LWA. Therefore, for the commercial operation, the optimization of pulp density remains a "challenge." However, the pilot run permitted the evaluation of different pulp densities and the resultant quality of filter cake produced. Examination of this variable at pilot scale suggests that for commercial operations, a target feed slurry pulp density should be in the range of 8-10% solids.

The dosing rate of the polymeric flocculant was consistent throughout the pilot operation suggesting that consumption does not vary significantly with changes in dredged sediment properties or composition. While it is readily acknowledged that the quantity of dredged material processed during the pilot test was relatively small and does not exhibit the range of compositions that may be present in the entire harbor waterbody, the data is valuable in demonstrating compositional uniformity within the limits of the testing. Further, the data offer that at the increased slurry flow rates of commercial scale operation, polymer dosing will be basically stable, contributing to steady-state operation. Because polymeric flocculant is a major cost component of the dewatering process, the implication of this data is significant.

Well-flocculated sediments responded well to OSC's primary dewatering technology. Flocculated solids were efficiently separated and dewatered of 85% of the free water.

The ability to successfully perform large-scale dewatering of the as-dredged sediment via the solid-liquid separation and dewatering technology employed was demonstrated. The pilot information provided baseline scale-up information and further suggests no apparent scale-up

problems at the primary dewatering, secondary dewatering or conveyance steps of the dewatering process.

The extreme plastic nature and rheology of the dredged material precluded the ability of the mechanically dewatered filter cake to be a suitable feed for the briquette press.

The Phase 1 Laboratory Study indicated that acceptable LWA could be made from feedstock containing varying quantities and ratios of dredged material. Further results of the Phase 1 Laboratory Study showed that acceptable lightweight aggregate could be made from a feedstock containing dredged material and raw shale without the addition of organic bloating enhancing agents. The conclusions drawn from the Phase 1 work suggested an optimal mix design of 70% dredged material/30% raw shale (dry weight basis) to yield a LWA characterized by a bulk density of <35 lb/cf and acceptable strength. For commercial scale operation, technical, economic and market factors will dictate the optimal mix design ratio. Dredged material quality and composition will determine the need for a bloating enhancing agent. LWA market requirements and the end-use or uses of the LWA will dictate acceptable product specifications and therefore play an important role in specifying the final mix design.

From the kiln processing stage, the heated air-swept hammermill dryer/grinder system was effective for both moisture removal and sizing of the dredged material filter cake. The recycling and mixing of dried dredged material filter cake using a ratio of approximately 1:1 (weight basis) prevented sticking and binding in the hammermill.

The selection of the hammermill dryer operating temperature and the achievement and maintenance of proper combustion conditions in the primary air heater burning zone are keys in the control of CO and VOC emissions from the circuit. Commercially, it is planned to use waste heat from the kiln and its afterburner circuit to heat the hammermill. Utilizing this scenario, the hammermill circuit will not contribute to final NOx emissions from the overall process.

The extruder preparation circuit incorporating the pre-dried and ground dredged material and shale and optimal water content, produced feed pellets with acceptable green strength for subsequent thermal processing in the rotary kiln.

The air pollution control system employed during the pilot rotary kiln testing was effective at reducing pollutant emissions. This system, comprised of an afterburner, ceramic particulate collection filter and recirculating wet caustic scrubber, provided generally greater than 90% reductions in pollutant emissions when measured across the pollution system, i.e., between the system's inlet and outlet. The exceptions to this were in NOx and mercury emission levels. The increase rather than decrease in NOx levels across the pollution control system may be attributable to the formation of both fuel and thermal NOx as a result of the use of natural gas for combustion in the afterburner. The mercury control efficiency for the pollution control system was approximately 61.7%, within the range (50-80%) typically seen for a system of this type.

The sample LWA product met applicable ASTM standards with one minor exception, gradation that is easily rectified in commercial operation. From a potential contaminant and environmental assessment, sediment decontamination occurred. Analytical results for the LWA tested were below detection limits for herbicides, pesticides, PCB aroclors, VOCs and TCLP volatiles, and SVOCs and TCLP semivolatiles. TCLP metals analyses for those metals with established regulatory limits were all below the established limits.

The independently performed data validation found the data to have been generated in an acceptable manner. The analytical laboratories used appropriate methods, conducted the analyses under the proper conditions with the proper QA/QC protocols, and in general, employed the necessary due diligence and professional practices.

While this pilot test has provided a great deal of baseline technical information and results readily applicable to a full-scale operation, the economic feasibility of the process on a commercial scale remains reliant on assumptions and projections that need further refinement and confirmation, preferably obtainable via a larger-scale Demonstration Project.

Capital investment will be required to establish a land based pre-kiln dewatering facility. The size of this facility, estimated to be 10 acres, includes storage capacity for both the unprocessed as-dredged material and the dewatered filter cake product, providing sufficient land area for all processing related activities as well as a building for administrative, laboratory and dewatering operations..

The cost commercial estimate is predicated on the receipt of a minimum of 500,000 cu yd of as-dredged material (in-situ) annually. This quantity is used to size equipment and determine facility requirements, define efficient operating scenarios and resource allocations, and to insure on-going product quality. The resultant projected total cost is estimated to be $42.32/cu yd.

The requisite investments and economies of scale mandated to make the technology economically viable will only be achieved through dedicated and continuing sourcing mechanisms. Further, it is important to note that the LWA manufacturing plant and more directly, the rotary kiln(s) need to function and produce on a "24/7" schedule at steady-state conditions. Frequent starts and stops of the kiln are inherently detrimental to this type of equipment due to the tremendous thermal stresses placed on the kiln shell and the refractory lining that result from the cooling and heating cycles. Operating at steady-state conditions with a minimum of process parameter variations is the best way to maximize dredged material usage and LWA product quality.

The inability to provide a continuous supply of dredged material may also be reflected in subtle differences in the LWA produced. While the aggregate will meet the applicable ASTM standards, frequent changes in the mix design ratio of the feed may cause some color variation in the LWA product and subsequently in the end use that may not be acceptable to the LWA specifier or owner.

It is recommended to conduct a Demonstration Sediment Decontamination and Beneficial Use Project using a substantial quantity of dredged material (30000+ cubic yards). The pre-kiln dewatering phase will be performed at a site proximate to the dredging location in the NY/NJ Harbor region. The kiln processing phase will be performed at an existing, operating lightweight aggregate facility. The Demonstration Project will include an effort to more adequately and fully characterize and quantify the fate of mercury and PCBs from the process. The LWA produced during the Demonstration Project will be used in an actual application or applications and therefore provide "real world" results to further evaluate LWA produced from dredged material. The undertaking and completion of a Demonstration Project will allow the confirmation of pilot study data, provide an opportunity to optimize operating parameters, finalize commercial plant modifications and layout requirements, and most importantly, offer the opportunity to refine operating costs.

APPENDIX

AN ENVIRONMENTAL PROTECTION AGENCY RESEARCH CENTER FOR FEDERAL REGIONS 1 & 2

Participating Academic Institutions:

Massachusetts Institute of Technology

New Jersey Institute of Technology

Princeton University

Rutgers — The State University of New Jersey

Stevens Institute of Technology

Tufts University

University of Medicine and Dentistry of New Jersey

Northeast Hazardous Substance Research Center

MEMO

Date: December 12, 2000

To: Jay Derman, PE – JCI/Upcycle Associates
Hank Schleiper – JCI/Upcycle Associates

From: Gerard F. McKenna, Director of Technology Transfer & Training

Re: New Jersey Sediment Decontamination Pilot Project – Phase I/ Independent Data Validation Report

---

The New Jersey Institute of Technology's Center for Environmental Engineering and Science provided independent data validation services for JCI/Upcycle Associates, LLC (JUA) pertaining to the New Jersey Sediment Decontamination Pilot Project (NJSDP). These included:

1. Review of background documents including sampling workplans, Quality Assurance/Quality Control (QA/QC) plans, analytical methodologies used, and federal/state data quality evaluation guidelines.

2. Review of analytical results and all supportive documentation provided by the sub-contractor analytical laboratories (Severn Trent Laboratory (STL) and Geotechnics). The STL laboratories used were STL Baltimore for TOC and PCB Congener analysis, STL Pittsburg for the Target Analyte List (TAL) of 23 analytes, Volatile Organic Compounds (VOC's), Semi-Volatile Organic Compounds (SVOC's), Pesticides, PCB Arochlors, Herbicides and STL West Sacraments for Dioxins. Geotechnics was used for Grain Size Analysis and Aqua Survey, Inc for the Biomonitoring tests.

3. Data results and supporting documentation were independently assessed by myself, with expert consulting assistance from William E. Sherman, using appropriate Data Validation Guidelines (DVG). Where DVG's were not available, then professional judgement was used. The data were assessed to determine that they would be of sufficient quality to its use in the pilot evaluation.

4. An evaluation report (this Report) is provided, summarizing our independent evaluation.

New Jersey Institute of Technology • University Heights • Newark, New Jersey 07102 • (201) 596-5883 • FAX (201) 802-1946

Printed on recycled paper

Our Center received five (5) boxes of data and accompanying documentation of this Phase of the evaluation. These were related to samples from three (3) steps of the Pilot project:

1. As Dredged Sediments (AD) 3 samples-1duplicate-1 field blank
2. Dewatered Filter Cake (FC) 2 samples
3. Liquid Collected during Dewatering (DL) 2 samples-1duplicate-1 field blank

We have attached the Laboratories Case Narratives and Internal Data Quality Evaluation (see attachments)

Summary:

Our evaluation was based on a review of Summary Reports (Form I) as well as the raw data. Items included in our review were: (where applicable)

- Initial Calibrations
- Continuing Calibrations
- Matrix Spikes
- Matrix Spike Duplicates
- Surrogate Spike Recoveries
- Blanks including Field
- Internal Control Samples
- Bioassay Control Tests and Summary Data
- Sample Integrity (Temperatures Maintained)

Conclusions:

Based on our reviews, we found the analytical data to be generated in an acceptable manner. We found that the laboratories used appropriate methodologies and analyzed the samples under acceptable conditions as shown by their Internal Quality Control Case Narratives.

The receiving laboratories noted that the "AS IS" samples were received on July 13, 2000 in coolers "within the proper temperature range" and that Dewatering Liquids and Filter Cake samples were received on September 1, 2000 in coolers "outside of the proper temperative range." Further, information is necessary to know if those samples, outside the range of about 4 c were exposed to any unusual conditions between the time of sampling and laboratory receipt. If this is not the case, it would seem likely that these samples represented the actual condition of the Dewatered Liquid and the filter Cake. It is advisable that the Filter Cake be re-analyzed at the start – point of Phase II to assure it is representative of the material being introduced into the Kiln

cc: William Sherman

As Dredged (AD)

CASE NARRATIVE
GZA GEOENVIRONMENTAL INC.

Lot #: C0G130181

Sample Receiving:
STL Pittsburgh received samples on July 13, 2000. The coolers were within the proper temperature range.

Herbicide analysis was added to the samples as per Mindy Sayres on July 21, 2000. She also said to go ahead with the herbicide analysis of the Field Blank even though it is outside of the holding time.

STL West Sacramento received the dioxin samples at 13°C.

The client requested that 2X the normal amount of sample be used for the extractions and digestions.

GC/MS Volatiles:
The relative percent difference between the matrix spike and matrix spike duplicate was outside of the control limits for trichloroethene, 1,1-dichloroethene, and benzene.

GC/MS Semivolatiles:
Due to the concentration of target compounds detected, several samples were analyzed at dilutions.

Sample AD-02 RE-1 had the recovery for 2-fluorobiphenyl outside of the control limits.

Sample AD-04 (DUP) RE-1 had the surrogates diluted out.

Pesticides:
Sample AD-04 (DUP) had TCX surrogate recoveries outside of the limits. The DCB recoveries are within the limits. The SOP states that only one surrogate had to be within the limits.

The form 8's do not reflect the updated retention times. The times that are flagged as being outside of the window are actually within the window.

PCB's:
There were no problems associated with the analysis.

Herbicides:
There were no problems associated with the analysis.

PCB Congeners:
The PCB Congener analysis was done at STL Baltimore.

CASE NARRATIVE
GZA GEOENVIRONMENTAL INC.

Lot #: C0G130181

Metals:
The matrix spike and matrix spike duplicate exceeded the 75-125% control limits for antimony, calcium, and lead. All associated samples are flagged with an "N" qualifier.

The serial dilution percent difference exceeded the control limits for beryllium and iron. All associated samples are flagged with an "E" qualifier.

The duplicate relative percent difference exceeded the control limits for calcium. All associated samples are flagged with an "*" qualifier.

For the matrix spike and matrix spike duplicate, aluminum, chromium, copper, iron, manganese, and zinc recoveries were not calculated due to the concentration of analyte in the sample being >4 times the concentration of spike added.

General Chemistry:
The TOC analysis was done at STL Baltimore.

The matrix spike and matrix spike duplicate were outside of the control limits for total cyanide.

Dioxin:
The dioxin analysis was done at STL West Sacramento.

The matrix spike and matrix spike duplicate had several isomers outside of the control limits.

Filter Cake (FC)

CASE NARRATIVE
GZA GEOENVIRONMENTAL INC.

Lot #: C0I010228

Sample Receiving:
STL Pittsburgh received samples on September 1, 2000. All of the coolers were outside of the proper temperature range.

A chain of custody was not received with the samples. A copy was received by fax.

GC/MS Volatiles:
The method blank had acetone detected. None of the samples had acetone detected. All results were reported "as is".

The methanol trip blank was not reported due to the samples being analyzed as totals and not methanol dilutions.

TCLP GC/MS Volatiles:
There were no problems associated with the analysis.

GC/MS Semivolatiles:
Samples FC-1 and FC-2 had the surrogate recoveries of 2,4,6-tribromophenol outside of the control limits. The matrix spike and matrix spike duplicate for sample FC-1 also had 2,4,6-tribromophenol surrogate recoveries outside of the control limits. This confirmed matrix interference. Sample FC-2 was not reectracted due to similar recoveries and matrix was suspected to be the cause.

Pesticides:
For the continuing calibration standards analyzed on the DB608 column on September 13, 2000 at 11:35 and 12:03 alpha-BHC and gamma-BHC exceeded the +/-15%D criteria. The average %D of all of the compounds in the continuing calibration standards was 9.4.

For the continuing calibration standards analyzed on the DB608 column on September 13, 2000 at 20:21 and 20:49 gamma-BHC exceeded the +/-15%D criteria. The average %D of all of the compounds in the continuing calibration standards was 10.4.

Both samples had gamma-BHC detected. The results were reported from the DB1701 column which had all of the continuing calibration standards in control. This meets the guidelines in the SOP.

PCB's:
There were no problems associated with the analysis.

Herbicides:
There were no problems associated with the analysis.

CASE NARRATIVE
GZA GEOENVIRONMENTAL INC.

Lot #: C0I010228

Metals:
The matrix spike was outside of the control limits for lead and antimony. All associated results are flagged with an "N" qualifier.

The matrix spike duplicate was outside of the control limits for potassium, lead, and antimony. All associated results are flagged with an "N" qualifier.

The relative percent difference between the matrix spike and the matrix spike duplicate was outside of the control limits for antimony. All associated results are flagged with an "*" qualifier.

All of the samples were over the instruments linear range for mercury and required dilutions.

For the matrix spike and matrix spike duplicate, mercury, aluminum, chromium, copper, iron, manganese, and zinc recoveries were not calculated due to the concentration of analyte in the sample being >4 times the concentration of spike added.

TCLP Metals:
There were no problems associated with the analysis.

General Chemistry:
The TOC analysis was done at STL Baltimore. All data is included in the package for C0I010216.

The grain size and percent solids analyses were done at Geotechnics. All data is included in the package.

PCB Congeners:
The PCB Congener analysis was done at STL Baltimore. All data is reported in the package for C0I010216.

Dewatering liquid (DL)

Filter Cake (FC)

Severn Trent Laboratories - Baltimore
ANALYTICAL NARRATIVE

Client: **STL-Pittsburgh**
Site: **GZA**
Project number: **COI020124**

Laboratory Project Manager: **Mary E. Asper**
STL Baltimore Report: **001149**
Date: **19 September 2000**

This report contains the results of the analysis of four water and two soil samples collected on 30 August 2000 in support of the referenced project.

SAMPLE RECEIPT

The samples arrived with custody seals intact by Federal Express at Severn Trent Laboratories - Baltimore on 6 September 2000. Upon receipt, the samples were inspected and compared with the chain-of-custody records. The samples were then logged into the laboratory computer system with assigned laboratory accession numbers and released for analysis.

Client Sample Designation	ST Lab Number
DL-01	0009998
DL-02	0009999
FIELD BLANK	0010000
DL-04	0010001
FC-1	0010002
FC-2	0010003

Following this narrative section are glossaries of data qualifiers (Tables 1 and 2), codes associated with manual integration of chromatographic peaks (Table 3), and the original chain-of-custody record. Analytical results and quality control information are summarized in the appended data package which has been formatted to be consistent with the deliverable requirements of this project.

ANALYTICAL METHODS

The analytical methods used by the laboratory are referenced by the STL Baltimore Method SOP which is formatted as STL-M-XXXXX-Y, where XXXXX is the reference method and Y is the SOP revision number. For example, analyses performed using EPA SW846 Method 8260B are identified as STL-M-8260B-3 where 3 is the laboratory SOP revision number. General Chemistry methods which are a consolidation of several reference methods, e.g. STL-M-CN for cyanide determinations, also include the identification of the specific reference method used for the analyses.

QUALITY CONTROL

The following sections are ordered as the data appears in this report. They contain observations

made during sample analysis, summarize the results of quality control measurements, and address the impact on data usability based upon project Data Quality Objectives. For each fractional analysis the narrative includes:

- Sample chronology: This section summarizes the sample history by fraction including the sample preparation method and date, analytical method, and analysis date. Anything unusual about the samples, digestates, or extracts is identified. Holding time compliance is evaluated in this section.

- Laboratory method performance: All quality control criteria for method performance must be met for all target analytes for data to be reported. These criteria generally apply to instrument tune, calibration, method blanks, and Laboratory Control Samples (LCS). In some instances where method criteria fail, useable data can be obtained and are reported with client approval. The narrative will then include a thorough discussion of the impact on data quality.

- Sample performance: Quality control field samples are analyzed to determine any measurement bias due to the sample matrix based on evaluation of matrix spikes (MS), matrix spike duplicates (MSD), and laboratory duplicates (D). If acceptance criteria are not met, matrix interferences are confirmed either by reanalysis or by inspection of the LCS results to verify that laboratory method performance is in control. Data are reported with appropriate qualifiers or discussion.

PCB CONGENERS by GC - WATER (STL0009998-STL001001)

Sample Chronology: Four samples and associated quality control were extracted on 07 August 2000 by STL-M-3540C-0. The extracts were analyzed on 11August 2000 for the method list of analytes by STL-M-8081A/8082-1. Samples were extracted one day outside holding time.

Laboratory Method Performance: All laboratory method performance criteria were met for the reported samples.

Sample Performance: All quality control criteria were met for the reported samples.

PCB CONGENERS by GC - SOIL (STL001002-STL001003)

Sample Chronology: Two samples and associated quality control were extracted on 07 August 2000 by STL-M-3540C-2. The extracts were analyzed on 11August 2000 for the method list of analytes by STL-M-8081A/8082-1. All holding times were met.

Laboratory Method Performance: All laboratory method performance criteria were met for the reported samples.

Severn Trent Laboratories - Baltimore
ANALYTICAL NARRATIVE

Client: **STL-Pittsburgh**
Site: **GZA**
Project number:**COI020124**

Laboratory Project Manager: **Mary E. Asper**
STL Baltimore Report: **001149**
Date: **19 September 2000**

Sample Performance: All quality control criteria were met for the reported samples with the following exception:

The MS and MSD had the recovery for some target analytes outside of the 30% to 150% QC limits due to high concentration of PCB CONGENERS in the native sample. All control analyte recoveries were within QC limits for the LCS, indicating acceptable method performance.

GENERAL CHEMISTRY - Water (STL0009998-STL0010001)

Sample Chronology: Four water samples were analyzed according to the following method:

Parameter	STL SOP#	Method#	Prep Date	Analysis Date
Total Organic Carbon	STL-M-TOC Water-1	SW 9060	N/A	11, 15 September 2000

All holding times were met for the reported samples.

Laboratory Method Performance: All laboratory method performance criteria were met for the reported samples.

Sample Performance: All quality control criteria were met for the reported samples.

GENERAL CHEMISTRY - Soil (STL0010002-STL0010003)

Sample Chronology: Two soil samples were analyzed according to the following method:

Parameter	STL SOP#	Method#	Prep Date	Analysis Date
Total Organic Carbon	STL-M-TOC Soil-1	SW 9060	N/A	16 September 2000

All holding times were met for the reported samples.

Laboratory Method Performance: All laboratory method performance criteria were met for the reported samples.

Sample Performance: All quality control criteria were met for the reported samples with the following exception:

The MSD, performed on sample FC-2, had a recovery below the lower control limit of 86% at 4%. This recovery may be due to the lack of homogeneity in the sample size (~10 mg) required for analysis, as the MS had a recovery just below the lower control limit at 85%. These recoveries may

Client: **STL-Pittsburgh**
Site: **GZA**
Project number: **COI020124**

Laboratory Project Manager: **Mary E. Asper**
STL Baltimore Report: **001149**
Date: **19 September 2000**

---

indicate a negative bias to the sample results.

CERTIFICATION OF RESULTS

The Laboratory certifies that the reported results relate only to those samples tested and that this report meets the project requirements for analytical data as stated in the Analytical Task Order (ATO) and the chain-of-custody. In addition, the Laboratory certifies that the data as reported meet the Data Quality Objectives for precision, accuracy, and completeness specified for this project or as stated in STL Baltimore's Quality Assurance program for other than the conditions detailed above. Release of the data contained in this report has been authorized by the Laboratory Project Manager as verified by the following signature.

Mary E. Asper 19 September 2000
Mary E. Asper, Laboratory Project Manager

Severn Trent Laboratories - Baltimore
ANALYTICAL NARRATIVE

As Dredged (AD.

Client: **STL-Pittsburgh**
Site: **GZA**
Project number:

Laboratory Project Manager: **Mary E. Asper**
STL Baltimore Report: **000889**
Date: **11 August 2000**

This report contains the results of the analysis of five water samples collected on 12 July 2000 in support of the referenced project.

SAMPLE RECEIPT

The samples arrived with custody seals intact by Federal Express at Severn Trent Laboratories - Baltimore on 14 July 2000. Upon receipt, the samples were inspected and compared with the chain-of-custody record. The samples were then logged into the laboratory computer system with assigned laboratory accession numbers and released for analysis.

Client Sample Designation	ST Lab Number
AD-01	0008111
AD-02	0008112
AD-03	0008113
AD-04 DUP	0008114
FB-01	0008115

Following this narrative section are glossaries of data qualifiers (Tables 1 and 2), codes associated with manual integration of chromatographic peaks (Table 3), and the original chain-of-custody record. Analytical results and quality control information are summarized in the appended data package which has been formatted to be consistent with the deliverable requirements of this project.

ANALYTICAL METHODS

The analytical methods used by the laboratory are referenced by the STL Baltimore Method SOP which is formatted as STL-M-XXXXX-Y, where XXXXX is the reference method and Y is the SOP revision number. For example, analyses performed using EPA SW846 Method 8260B are identified as STL-M-8260B-3 where 3 is the laboratory SOP revision number. General Chemistry methods which are a consolidation of several reference methods, e.g. STL-M-CN for cyanide determinations, also include the identification of the specific reference method used for the analyses.

QUALITY CONTROL

The following sections are ordered as the data appears in this report. They contain observations made during sample analysis, summarize the results of quality control measurements, and address the impact on data usability based upon project Data Quality Objectives. For each fractional analysis the narrative includes:

Severn Trent Laboratories - Baltimore
ANALYTICAL NARRATIVE

Client: **STL-Pittsburgh**
Site: **GZA**
Project number:

Laboratory Project Manager: **Mary E. Asper**
STL Baltimore Report: **000889**
Date: **11 August 2000**

- Sample chronology: This section summarizes the sample history by fraction including the sample preparation method and date, analytical method, and analysis date. Anything unusual about the samples, digestates, or extracts is identified. Holding time compliance is evaluated in this section.

- Laboratory method performance: All quality control criteria for method performance must be met for all target analytes for data to be reported. These criteria generally apply to instrument tune, calibration, method blanks, and Laboratory Control Samples (LCS). In some instances where method criteria fail, useable data can be obtained and are reported with client approval. The narrative will then include a thorough discussion of the impact on data quality.

- Sample performance: Quality control field samples are analyzed to determine any measurement bias due to the sample matrix based on evaluation of matrix spikes (MS), matrix spike duplicates (MSD), and laboratory duplicates (D). If acceptance criteria are not met, matrix interferences are confirmed either by reanalysis or by inspection of the LCS results to verify that laboratory method performance is in control. Data are reported with appropriate qualifiers or discussion.

PCB CONGENERS by GC - SOIL (STL0008111-STL000814)

Sample Chronology: Four samples and associated quality control were extracted on 20 July 2000 by STL-M-3540C-2. The extracts were analyzed on 02 and 04 August 2000 for the method list of analytes by STL-M-8081A/8082-1. All holding times were met.

Samples AD-03 and AD-04dup both required a 2X dilutions to bring the concentration of a target analyte within instrument calibration range.

Laboratory Method Performance: All laboratory method performance criteria were met for the reported samples.

Sample Performance: All quality control criteria were met for the reported samples with the following exception:

The MS and MSD had the recovery for several target analytes outside of the 30% to 150% QC limits. These recoveries may indicate a bias for some analytes for this sample. All control analyte recoveries were within QC limits for the LCS, indicating acceptable method performance.

PCB CONGENERS by GC - WATER (STL0008115)

Sample Chronology: One sample and associated quality control were extracted on 18 July 2000 by STL-M-3540C-0. The extracts were analyzed on 01 August 2000 for the project list of analytes by STL-M-8081A/8082-1. All holding times were met.

Client: **STL-Pittsburgh**
Site: **GZA**
Project number:

Laboratory Project Manager: **Mary E. Asper**
STL Baltimore Report: **000889**
Date: **11 August 2000**

No MS/MSD was extracted with the sample due to insufficient sample volume. As such, duplicate LCSs were extracted and analyzed with the sample.

Laboratory Method Performance: All laboratory method performance criteria were met for the reported sample.

Sample Performance: All quality control criteria were met for the reported sample.

GENERAL CHEMISTRY - Soil (STL0008111 - STL0008114)

Sample Chronology: Four soil samples were analyzed according to the following method:

Parameter	STL SOP#	Method#	Prep Date	Analysis Date
Total Organic Carbon	STL-M-TOC Soil-1	SW 9060	N/A	09 August 2000

All holding times were met for the reported samples.

Laboratory Method Performance: All laboratory method performance criteria were met for the reported samples with the following exception:

The LCS had a recovery above the upper control limit of 106% at 109%. This high recovery may be indicative of a slight positive bias.

Sample Performance: All quality control criteria were met for the reported sample with the following exceptions:

The batch MSD had a recovery below the lower control limit of 86% at 59%. This recovery may be indicative of a negative bias to the sample results.

GENERAL CHEMISTRY - Water (STL0008115)

Sample Chronology: One water sample was analyzed according to the following method:

Parameter	STL SOP#	Method#	Prep Date	Analysis Date
Total Organic Carbon	STL-M-TOC Water-1	SW 9060	N/A	08 August 2000

All holding times were met for the reported sample. The batch MS/MSD were performed on another client sample. All data associated with the analyses of these samples are included in this report.

Laboratory Method Performance: All laboratory method performance criteria were met for the

Client: **STL-Pittsburgh**
Site: **GZA**
Project number:

Laboratory Project Manager: **Mary E. Asper**
STL Baltimore Report: **000889**
Date: **11 August 2000**

---

reported sample with the following exception:

The LCS had a recovery above the upper control limit of 103% at 108%. This high recovery may be indicative of a slight positive bias.

Sample Performance: All quality control criteria were met for the reported sample.

CERTIFICATION OF RESULTS

The Laboratory certifies that the reported results relate only to those samples tested and that this report meets the project requirements for analytical data as stated in the Analytical Task Order (ATO) and the chain-of-custody. In addition, the Laboratory certifies that the data as reported meet the Data Quality Objectives for precision, accuracy, and completeness specified for this project or as stated in STL Baltimore's Quality Assurance program for other than the conditions detailed above. Release of the data contained in this report has been authorized by the Laboratory Project Manager as verified by the following signature.

11 August 2000

Mary E. Asper, Laboratory Project Manager

Dewatering Liquid (DL).

CASE NARRATIVE
GZA GEOENVIRONMENTAL INC.

Lot #: C0I010216

Sample Receiving:
STL Pittsburgh received samples on September 1, 2000. All of the coolers were outside of the proper temperature range.

Sample bottles for FB were received but were not listed on the chain of custody.

GC/MS Volatiles:
There were no problems associated with the analysis.

GC/MS Semivolatiles:
The matrix spike and matrix spike duplicate were outside of the control limits for phenol and 4-chloro-3-methylphenol.

Samples Dl-02 and DL-01 had the surrogate recoveries of phenol-d5 outside of the control limits. The matrix spike and matrix spike duplicate for sample Dl-01 also had phenol-d5 surrogate recoveries outside of the control limits. This confirmed matrix interference. The matrix spike and matrix spike duplicate also had other surrogates outside of the limits. Sample DL-02 was not reectracted due to similar recoveries and matrix was suspected to be the cause.

Pesticides:
For the continuing calibration standards analyzed on the DB608 column on September 13, 2000 at 11:35 and 12:03 alpha-BHC and gamma-BHC exceeded the +/-15%D criteria. The average %D of all of the compounds in the continuing calibration standards was 9.4. Since these compounds were not detected in the samples, all data was reported.

For the continuing calibration standards analyzed on the DB608 column on September 13, 2000 at 20:21 and 20:49 gamma-BHC exceeded the +/-15%D criteria. The average %D of all of the compounds in the continuing calibration standards was 10.4. Since these compounds were not detected in the samples, all data was reported.

PCB's:
There were no problems associated with the analysis.

Herbicides:
There were no problems associated with the analysis.

Metals:
The matrix spike and matrix spike duplicate were outside of the control limits for aluminum. All associated results are flagged with an "N" qualifier.

Samples DL-01, the matrix spike, the matrix spike duplicate, and DL-02 were over the instruments linear range for sodium and required dilutions.

For the matrix spike and matrix spike duplicate, iron, magnesium, and sodium recoveries were not calculated due to the concentration of analyte in the sample being >4 times the concentration of spike added.

General Chemistry:
The TOC analysis was done at STL Baltimore. All data is included in the package.

PCB Congeners:
The PCB Congener analysis was done at STL Baltimore. All data is reported in the package.

Dewatering Liquid (DL)

CASE NARRATIVE
GZA GEOENVIRONMENTAL INC.

Lot #: C0I010222

Sample Receiving:
STL Pittsburgh received samples on September 1, 2000. All of the coolers were outside of the proper temperature range.

Sample FB 01 was not listed on the chain of custody. It was logged in just like the other samples.

Dioxins:
STL West Sacramento did the dioxin analysis. All data is included in the package.

The method blank had total TCDD and OCDD detected.

METHODS SUMMARY

C0G130181

PARAMETER	ANALYTICAL METHOD	PREPARATION METHOD
Chlorinated Herbicides by GC	SW846 8151A	SW846 8151A
Cyanide, Total	SW846 9012A	SW846 9012A
Dioxins/Furans, HRGC/HRMS	EPA-5 1613B	
Dioxins/Furans, HRGC/HRMS	EPA-5 1613B	EPA-5 1613B
Inductively Coupled Plasma (ICP) Metals	SW846 6010B	SW846 3010A
Inductively Coupled Plasma (ICP) Metals	SW846 6010B	SW846 3050B
Mercury in Liquid Waste (Manual Cold-Vapor)	SW846 7470A	SW846 7470A
Non-Filterable Residue (TSS)	MCAWW 160.2	MCAWW 160.2
Organochlorine Pesticides	SW846 8081A	
Organochlorine Pesticides	SW846 8081A	SW846 3510C
PCBs by SW-846 8082	SW846 8082	SW846 3510C
PCBs by SW-846 8082	SW846 8082	SW846 3540
Semivolatile Organic Compounds by GC/MS	SW846 8270C	SW846 3520C
Semivolatile Organic Compounds by GC/MS	SW846 8270C	SW846 3540C
Total Residue as Percent Solids	MCAWW 160.3 MOD	MCAWW 160.3 MOD
Trace Inductively Coupled Plasma (ICP) Metals	SW846 6010B	SW846 3010A
Trace Inductively Coupled Plasma (ICP) Metals	SW846 6010B	SW846 3050B
Volatile Organics by GC/MS	SW846 8260B	SW846 5030
Volatile Organics by GC/MS	SW846 8260B	SW846 5035

References:

EPA-5 "Method 1613: Tetra- through Octa- Chorinated Dioxins and Furans by Isotope Dilution, HRGC/HRMS, Revision B", EPA, OCTOBER 1994

MCAWW "Methods for Chemical Analysis of Water and Wastes", EPA-600/4-79-020, March 1983 and subsequent revisions.

SW846 "Test Methods for Evaluating Solid Waste, Physical/Chemical Methods", Third Edition, November 1986 and its updates.

METHODS SUMMARY

C0I010222

PARAMETER	ANALYTICAL METHOD	PREPARATION METHOD
Dioxins/Furans, HRGC/HRMS	EPA-5 1613B	

References:

EPA-5 "Method 1613: Tetra- through Octa- Chorinated Dioxins and Furans by Isotope Dilution, HRGC/HRMS, Revision B", EPA, OCTOBER 1994

METHODS SUMMARY

C0I010216

PARAMETER	ANALYTICAL METHOD	PREPARATION METHOD
Chlorinated Herbicides by GC	SW846 8151A	SW846 8151A
Inductively Coupled Plasma (ICP) Metals	SW846 6010B	SW846 3010A
Mercury in Liquid Waste (Manual Cold-Vapor)	SW846 7470A	SW846 7470A
Non-Filterable Residue (TSS)	MCAWW 160.2	MCAWW 160.2
Organochlorine Pesticides	SW846 8081A	SW846 3510C
PCBs by SW-846 8082	SW846 8082	SW846 3510C
Semivolatile Organic Compounds by GC/MS	SW846 8270C	SW846 3520C
Trace Inductively Coupled Plasma (ICP) Metals	SW846 6010B	SW846 3010A
Volatile Organics by GC/MS	SW846 8260B	SW846 5030

References:

MCAWW "Methods for Chemical Analysis of Water and Wastes", EPA-600/4-79-020, March 1983 and subsequent revisions.

SW846 "Test Methods for Evaluating Solid Waste, Physical/Chemical Methods", Third Edition, November 1986 and its updates.

SAMPLE SUMMARY

C0I010222

WO #	SAMPLE#	CLIENT SAMPLE ID	DATE	TIME
DJRH1	001	DL-01	08/30/00	14:15
DJRH7	002	DL-02	08/30/00	15:00
DJRH9	003	FB 01	08/30/00	15:30

NOTE(S):

- The analytical results of the samples listed above are presented on the following pages.
- All calculations are performed before rounding to avoid round-off errors in calculated results.
- Results noted as "ND" were not detected at or above the stated limit.
- This report must not be reproduced, except in full, without the written approval of the laboratory.
- Results for the following parameters are never reported on a dry weight basis: color, corrosivity, density, flashpoint, ignitability, layers, odor, paint filter test, pH, porosity pressure, reactivity, redox potential, specific gravity, spot tests, solids, solubility, temperature, viscosity, and weight.

SAMPLE SUMMARY

C0I010216

WO #	SAMPLE#	CLIENT SAMPLE ID	DATE	TIME
DJRF8	001	DL-01	08/30/00	14:15
DJRFX	002	DL-02	08/30/00	15:00
DJRG6	003	FB 01	08/30/00	15:30
DJRGM	004	TB	08/30/00	

NOTE(S):

- The analytical results of the samples listed above are presented on the following pages.
- All calculations are performed before rounding to avoid round-off errors in calculated results.
- Results noted as "ND" were not detected at or above the stated limit.
- This report must not be reproduced, except in full, without the written approval of the laboratory.
- Results for the following parameters are never reported on a dry weight basis: color, corrosivity, density, flashpoint, ignitability, layers, odor, paint filter test, pH, porosity pressure, reactivity, redox potential, specific gravity, spot tests, solids, solubility, temperature, viscosity, and weight.

OTTO YORK CENTER
FOR ENVIRONMENTAL
ENGINEERING AND SCIENCE

NJIT
New Jersey Institute of Technology

A Public Research University

COMPRISING THE FOLLOWING:

Center for Airborne Organics

Hazardous Substance Management Research Center

New Jersey Technical Assistance Program for Industrial Pollution Prevention

Northeast Hazardous Substance Research Center

Sustainable Green Manufacturing Program

MEMO

Date: July 31, 2001

To: Jay Derman, PE – JCI/Upcycle Associates

From: Gerard F. McKenna, Director of Technology Transfer & Training Gerard F. McKenna

Re: New Jersey Sediment Decontamination Pilot Project – Phase II/ Independent Data Validation Report

---

The New Jersey Institute of Technology's Center for Environmental Engineering and Science provided independent data validation services for JCI/Upcycle Associates, LLC (JUA) pertaining to the New Jersey Sediment Decontamination Pilot Project (NJSDP). These included:

1. Review of background documents including sampling workplans, Quality Assurance/Quality Control (QA/QC) plans, analytical methodologies used, and federal/state data quality evaluation guidelines.

   Review of analytical results and all supportive documentation provided by the contractor, Fuller Air Compliance (FAC) and the sub-contractor analytical laboratories: York Analytical Laboratories, Inc., PCS Analytical Services, Enthalpy Analytical, Inc., and Triangle Laboratories

2. Data results and supporting documentation were independently assessed by myself, with expert consulting assistance from William E. Sherman, using appropriate Data Validation Guidelines (DVG). Where DVG's were not available, then professional judgement was used. The data were assessed to determine that they would be of sufficient quality to its use in the pilot evaluation.

3. This memo is a report summarizing our independent evaluation.

UNIVERSITY HEIGHTS
NEWARK, NJ 07102-1982
973. 596. 3233
973. 802. 1946 FAX
www.cees.njit.edu

EVALUATION

Our Center received three (3) boxes of data and accompanying documentation of this Phase of the demonstartion. These were related primarily to samples from five (5) steps of the Pilot project:

1. Feed material and shale additives
2. Baghouse
3. Scrubber
4. Flue gas emission - see below
5. Product

FLUE GAS SAMPLES:

We reviewed analytical data and related supporting information from the flue gas samples obtained by to:

EPA Method 5 - total suspended particulate matter

EPA Method 23- PCDD/PCDF, Semi-volatile organics, PCB's and Total Chromatographical Semivolatile Organics

EPA Method 29 for multiple metals

EPA Method 101A (from 40 CFR 61, Appendix B and in conjunction with EPA Method 5) for mercury

NJ Method 1 (in conjunction with EPA Method 202) for total suspended particulate matter

SW 846 Method 0030 for volatile organic compounds

SW 846 Method 0050 for hydrogen chloride, bromide and fluoride, ammonia and chlorine

SW 846 Method 0061 for hexavalent chromium

PROCESS AND PRODUCT

We have also reviewed analytical data and supporting information related to samples taken from the fuel oil, shale additive, feed pellets, aggregate product, ceramic catch filter, scrubber make up- water and scrubber liquor. The methods used are shown in our attachment 1 which is abstracted from the "Report for Air Emissions Testing and Process Materials Sampling of Thermal Processing of Ocean Dredge Materials"

SUMMARY:

Our evaluation was based on a review of Summary Reports (Form I) as well as the raw data. Items included in our review were: (where applicable)

- Initial Calibrations
- Continuing Calibrations
- Matrix Spikes
- Matrix Spike Duplicates
- Surrogate Spike Recoveries
- Blanks including Field
- Internal Control Samples
- Sample Integrity (Temperatures Maintained)

CONCLUSIONS:

Based on our review of the data, we have found the data to have been generated in an acceptable manner. In addition to the data, we have reviewed and attached the Laboratories Case Narratives and Internal Data evaluations. We are in general concurrence with them. This is based on the selection of methods, the quality assurance/quality control protocols and data and the general professional practices that were employed.

Although the data are generally acceptable, its useability will require careful consideration of the qualifiers provided with the data in the context of the project. For example, 3 M23 samples taken for dioxin and furans analysis (SI-M0010-23AR2 213-216,221, SI-M0010-23AR3 225-228, 233 and SI-M0010-23AR4 282-285, 287) are qualified because of saturated analyte signals, ion abundance ratios and labeled standard recoveries, indicating possibility of biased results. The significance of these deviations can best be considered during the formation of a specific conclusion.

Please let us know if we can be of any assistance in further evaluation of the useability of this data.

cc: William Sherman

Table 4-1a. Summary of Preparation and Handling of Process Samples for JCI/Upcycle			
Sample Type	**Analyte(s)**	**Method of Sample Preparation**	**Sample Analysis Method**
Fuel Oil	Halogens (Chlorine, Brom ine, Fluorine)	EPA Method 5050[2]	EPA Method 300.0[1]
Shale	Metals (Excluding Mercury)	EPA Method 3050B[2]	EPA Method 6010B[2]
	Mercury		EPA Method 7471A[2]
	Halogens (Chlorine, Brom ine, Fluorine)	EPA Method 5050[2]	EPA Method 300.0[1]
	Total Organic Carbon	[3]	[3]
Feed Pellets	Metals (Excluding Mercury)	EPA Method 3050B[2]	EPA Method 6010B[2]
	Mercury	EPA Method 7471A[2]	EPA Method 7471A[2]
	Halogens (Chlorine, Brom ine, Fluorine)	EPA Method 5050[2]	EPA Method 300.0[1]
	PCDD/PCDF	EPA Method 8290[2]	EPA Method 8290[2]
	Herbicides	EPA Method 3550B[2]	EPA Method 8151A[2]
	Pesticides	EPA Method 3550B[2]	EPA Method 8081[2]
	PCBs	EPA Method 3550B[2]	EPA Method 8082[2]
	Volatile Organic Compounds	EPA Method 5030B[2]	EPA Method 8260[2]
	Semivolatile Organic Compounds	EPA Method 3550B[2]	EPA Method 8270[2]
	TCLP Volatiles	EPA Methods 1311 and 5030B[2]	EPA Method 8260[2]
	TCLP Semivolatiles	EPA Methods 1311 and 3510C[2]	EPA Method 8270[2]
Aggregate Product	Metals (Excluding Mercury)	EPA Method 3050B[2]	EPA Method 6010B[2]
	Mercury	EPA Method 7471A[2]	EPA Method 7471A[2]
	Halogens (Chlorine, Brom ine, Fluorine)	EPA Method 5050[2]	EPA Method 300.0[1]
	PCDD/PCDF	EPA Method 8290[2]	EPA Method 8290[2]
	Herbicides	EPA Method 3550B[2]	EPA Method 8151A[2]
	Pesticides	EPA Method 3550B[2]	EPA Method 8081[2]

Table 4-1b. Summary of Preparation and Handling of Process Samples for JCI/Upcycle (Continued)			
Sample Type	**Analyte(s)**	**Method of Sample Preparation**	**Sample Analysis Method**
Aggregate Product (Continued)	PCBs	EPA Method 3550B[2]	EPA Method 8082[2]
	Volatile Organic Compounds	EPA Method 5030B[2]	EPA Method 8260[2]
	Semivolatile Organic Compounds	EPA Method 3550B[2]	EPA Method 8270[2]
	TCLP Volatiles	EPA Methods 1311 and 5030B[2]	EPA Method 8260[2]
	TCLP Semivolatiles	EPA Methods 1311 and 3510C[2]	EPA Method 8270[2]
	TCLP Metals (Excluding Mercury)	EPA Methods 1311 and 3010A[2]	EPA Method 6010B[2]
	TCLP Mercury	EPA Methods 1311 and 3010A[2]	EPA Method 7471A[2]
	MEP Metals (Excluding Mercury)	EPA Methods 1320 and 3010A[2]	EPA Method 6010B[2]
	MEP Mercury	EPA Methods 1320 and 3010A[2]	EPA Method 7471A[2]
Ceramic Filter Catch	Metals (Excluding Mercury)	EPA Method 3050B[2]	EPA Method 6010B[2]
	Mercury	EPA Method 7471A[2]	EPA Method 7471A[2]
	Total Organic Carbon	[3]	[3]
	PCDD/PCDF	EPA Method 8290[2]	EPA Method 8290[2]
	Herbicides	EPA Method 3550B[2]	EPA Method 8151A[2]
	Pesticides	EPA Method 3550B[2]	EPA Method 8081[2]
	PCBs	EPA Method 3550B[2]	EPA Method 8082[2]
	Volatile Organic Compounds	EPA Method 5030B[2]	EPA Method 8260[2]
	Semivolatile Organic Compounds	EPA Method 3550B[2]	EPA Method 8270[2]
	TCLP Volatiles	EPA Methods 1311 and 5030B[2]	EPA Method 8260[2]
	TCLP Semivolatiles	EPA Methods 1311 and 3510C[2]	EPA Method 8270[2]
	TCLP Metals (Excluding Mercury)	EPA Methods 1311 and 3010A[2]	EPA Method 6010B[2]

Table 4-1c. Summary of Preparation and Handling of Process Samples for JCI Upcycle (Continued)			
Sample Type	**Analyte(s)**	**Method of Sample Preparation**	**Sample Analysis Method**
Ceramic Filter Catch (Continued)	TCLP Mercury	EPA Methods 1311 and 3010A[2]	EPA Method 7471A[2]
	MEP Metals (Excluding Mercury)	EPA Methods 1320 and 3010A[2]	EPA Method 6010B[2]
	MEP Mercury	EPA Methods 1320 and 3010A[2]	EPA Method 7471A[2]
Scrubber Makeup Water	Metals (Excluding Mercury)	EPA Method 3010A[2]	EPA Method 6010B[2]
	Mercury	EPA Method 7471A[2]	EPA Method 7471A[2]
	Total Halogens	Method 776, ASTM	EPA Method 300.0[1]
Scrubber Liquor	Metals (Excluding Mercury)	EPA Method 3010A	EPA Method 6010B[2]
	Mercury	EPA Method 7471A[2]	EPA Method 7471A[2]
	Total Halogens	Method 776, ASTM	EPA Method 300.0[1]

Notes:
[1]From EPA *Methods for Chemical Analysis of Water and Wastes.*

[2]From EPA *Test Methods for Evaluating Solid Waste, Physical/Chemical Methods* (EPA SW-846).

[3]From *Manual on Soil Sampling and Methods of Analysis*, second ed, 1978, Canadian Society of Soil Science, J.A. McKeague edition.

was then placed in a separate clean foil pan, mixed throughly using a Teflon spatula and placed into separate glass containers for composite sample 3.

Aggregate Product

The aggregate product samples were collected every 30 minutes beginning 0800 on March 14, 2001 until 0600 on March 16, 2001. The samples were composited as follows:

PCDD/PCDF M23

CASE NARRATIVE

Analysis of Samples for the Presence of

Polychlorinated Dibenzo-*p*-Dioxins and Dibenzofurans by

High-Resolution Chromatography / High-Resolution Mass Spectrometry

Method 23 (6/93)

Date:	April 11, 2001
Client ID:	Fuller Air Compliance
P.O. Number:	70155-DA
TLI Project Number:	53386A

This report should only be reproduced in full. Any partial reproduction of this report requires written permission from Triangle Laboratories, Inc.

Rev. 11/19/97
WWW.TriangleLabs.com

Overview

The samples and associated QC samples were extracted and analyzed according to procedures described in Method 23 (6/93). Any particular difficulties encountered during the sample handling by Triangle Laboratories will be discussed in the QC Remarks section below. This report contains results only from the Method 23 dioxin/furan analyses of the M23 sampling trains.

Quality Control Samples

A laboratory method blank, identified as the TLI Blank, was prepared along with the samples.

Laboratory control spike (LCS) and laboratory control spike duplicate (LCSD) samples were extracted and analyzed along with the samples. A report summarizing the analyte recoveries and relative percent differences for these samples is included in the data package.

Quality Control Remarks

This release of this particular set of Fuller Air Compliance analytical data by Triangle Laboratories was authorized by the Quality Control Chemist who has reviewed each sample data package following a series of inspections/reviews. When applicable, general deviations from acceptable QC requirements are identified below and comments are made on the effect of these deviations upon the validity and reliability of the results. Specific QC issues associated with this particular project are:

Sample receipt: Seven M23 sample(s) were received from Fuller Air Compliance in good condition on March 21, 2001 at 7.0 °C and stored in a refrigerator at 4 °C.

Sample Preparation Laboratory: None

Mass Spectrometry: None

Data Review: The analyses of samples SI-M0010-23A R2 213-216,221, SI-M0010-23A R3 225-228,233, and SI-M0010-23A R4 282-285,287 exhibit the presence of saturated analyte signals (signals outside the dynamic range of the instrument). The affected

analytes are flagged "S" on the quantitation report. The results for these analytes should be considered minimum estimates of the actual concentrations present in the samples.

The ion abundance ratios and recoveries for some of the labeled standard in samples SI-M0010-23A R2 213-216,221, SI-M0010-23A R3 225-228,233, and SI-M0010-23A R4 282-285,287 are outside method criteria. The associated analyte results should be considered estimated. This problem is considered matrix related as the QC samples did not show similar problems.

Other Comments: No 2,3,7,8-substituted target analytes were detected in the TLI Blank above the target detection limit (TDL).

The analytical data presented in this report are consistent with the guidelines of EPA Method 23 (6/93). Any exceptions have been discussed in the QC Remarks section of this case narrative with emphasis on their effect on the data. Should Fuller Air Compliance have any questions or comments regarding this data package, please feel free to contact a Project Scientist,at 919/544-5729.

For Triangle Laboratories, Inc.,

Released by

Kenneth Varley

Kenneth Varley

Report Preparation Chemist

The total number of pages in the data package is : 491 .

HCL, HBR, HF, NH4, Cl

PROJECT NARRATIVE

PHILIP Analytical Services Inc (Burlington ON)
Philip Project: AN010302
Philip Submission #:1C0711

Client: York Service Corporation
Client Project: JCI UPCYCLE-70155

I. SAMPLE RECEIPT/ANALYSIS

a) Sample Listing

Philip ID	Client Sample ID	Date Sampled	Date Received	Date Prepped	Run Date
Hydrogen Bromide via EPA Method 26					
012991 01	Method Blank	01/03/15	01/03/23	01/03/27	01/03/27
012992 01	641 SO-M0050 BLANK	01/03/15	01/03/23	01/03/27	01/03/27
012993 01	621 SO-M0050 R1	01/03/15	01/03/23	01/03/27	01/03/27
012994 01	627 SO-M0050 R2	01/03/15	01/03/23	01/03/27	01/03/27
012995 01	634 SO-M0050 R3	01/03/15	01/03/23	01/03/27	01/03/27
012996 01	601 SI-M0050 R1	01/03/15	01/03/23	01/03/27	01/03/27
012997 01	607 SI-M0050 R2	01/03/15	01/03/23	01/03/27	01/03/27
012998 01	614 SI-M0050 R3	01/03/15	01/03/23	01/03/27	01/03/27
Hydrogen Chloride via EPA Method 26					
012991 01	Method Blank	01/03/15	01/03/23	01/03/27	01/03/27
012992 01	641 SO-M0050 BLANK	01/03/15	01/03/23	01/03/27	01/03/27
012993 01	621 SO-M0050 R1	01/03/15	01/03/23	01/03/27	01/03/27
012994 01	627 SO-M0050 R2	01/03/15	01/03/23	01/03/27	01/03/27
012995 01	634 SO-M0050 R3	01/03/15	01/03/23	01/03/27	01/03/27
012996 01	601 SI-M0050 R1	01/03/15	01/03/23	01/03/27	01/03/27
012997 01	607 SI-M0050 R2	01/03/15	01/03/23	01/03/27	01/03/27
012998 01	614 SI-M0050 R3	01/03/15	01/03/23	01/03/27	01/03/27
Hydrogen Fluoride via EPA Method 26					
012991 01	Method Blank	01/03/15	01/03/23	01/03/27	01/03/27
012992 01	641 SO-M0050 BLANK	01/03/15	01/03/23	01/03/27	01/03/27
012993 01	621 SO-M0050 R1	01/03/15	01/03/23	01/03/27	01/03/27
012994 01	627 SO-M0050 R2	01/03/15	01/03/23	01/03/27	01/03/27
012995 01	634 SO-M0050 R3	01/03/15	01/03/23	01/03/27	01/03/27
012996 01	601 SI-M0050 R1	01/03/15	01/03/23	01/03/27	01/03/27
012997 01	607 SI-M0050 R2	01/03/15	01/03/23	01/03/27	01/03/27
012998 01	614 SI-M0050 R3	01/03/15	01/03/23	01/03/27	01/03/27

Total Chlorine via EPA Method 26

012999 01	Method Blank	01/03/15	01/03/23	01/04/03	01/04/03
013000 01	642 M0050-Blank	01/03/15	01/03/23	01/04/03	01/04/03
013001 01	624 M0050-SO R1	01/03/15	01/03/23	01/04/03	01/04/03
013002 01	631 M0050-SO R2	01/03/15	01/03/23	01/04/03	01/04/03
013003 01	638 M0050-SO R3	01/03/15	01/03/23	01/04/03	01/04/03
013004 01	604 M0050-SI R1	01/03/15	01/03/23	01/04/03	01/04/03
013005 01	611 M0050-SI R2	01/03/15	01/03/23	01/04/03	01/04/03
013006 01	618 M0050-SI R3	01/03/15	01/03/23	01/04/03	01/04/03

Ammonia via CTM - 027

012991 01	Method Blank	01/03/15	01/03/23	01/03/28	01/03/28
012992 01	641 SO-M0050 BLANK	01/03/15	01/03/23	01/03/28	01/03/28
012993 01	621 SO-M0050 R1	01/03/15	01/03/23	01/03/28	01/03/28
012994 01	627 SO-M0050 R2	01/03/15	01/03/23	01/03/28	01/03/28
012995 01	634 SO-M0050 R3	01/03/15	01/03/23	01/03/28	01/03/28
012996 01	601 SI-M0050 R1	01/03/15	01/03/23	01/03/28	01/03/28
012997 01	607 SI-M0050 R2	01/03/15	01/03/23	01/03/28	01/03/28
012998 01	614 SI-M0050 R3	01/03/15	01/03/23	01/03/28	01/03/28

Run Date is defined as the date of injection of the last calibration standard (12 hour or less) prior to the samples analyzed within that run sequence. Therefore the time of calibration injection that defines the run date is always within 12 hours of the time of sample injection.

b) Shipping Problems: none encountered

c) Documentation Problems: none encountered

II. SAMPLE PREP:

No problems encountered

III. SAMPLE ANALYSIS:

See also comments within the appropriate Certificate of Analysis.

a) Hold Times: all within recommended hold times

b) Instrument Calibration: all within control limits

c) Surrogate/Internal Recoveries: except where noted otherwise, all within control limits

I certify that this data package is in compliance with the terms and conditions of the contract, both technically and for completeness, for other than the conditions detailed above.
In addition, I certify, that to the best of my knowledge and belief, the data as reported are true and accurate.
Release of the data contained in this data package has been authorized by the cognizant laboratory official or his/her designee, as verified by this signature.

Shari Typer, Project Manager

April 9, 2001
Date

SVOC's

TRIANGLE LABORATORIES, INC.
CASE NARRATIVE

April 10, 2001
53386C

Objective: Analysis of seven MM5 train samples for semivolatile compounds and Tentatively Identified Compounds (TIC's), using Method 8270C.

Method:

Seven MM5 train samples were received by Triangle Laboratories, Inc. on ice at 7°C and in good condition on March 21, 2001. The samples were stored in a cooler at 4°C prior to extraction. The XAD traps used for sampling were pre-spiked with 100 micrograms (ug) of terphenyl-d_{14} prior to sampling. Prior to extraction, the XAD, filter, and rinses were spiked with 200 ug of phenol-d_5, 2,4,6-tribromophenol, and 2-fluorophenol and 100 ug of terphenyl-d_{14}, 2-fluorobiphenyl, and nitrobenzene-d_5. These portions of the MM5 trains were Soxhlet extracted with methylene chloride for 16 hours. The impinger condensates were extracted with methylene chloride using a separatory funnel. The extracts were split with 50 percent of each extract being used for the dioxin analysis, 25 percent for PCB analysis, and 25 percent for the semivolatile analysis. The extract portions were combined and brought to a final volume of 1.0 milliliter (mL) for the semivolatile analysis. The analysis is based on the guidelines of Method 8270C Rev. 3 (12/96). The results reported relate only to the items tested.

The internal standards, 1,4-dichlorobenzene-d_4, naphthalene-d_8, acenaphthene-d_{10}, phenanthrene-d_{10}, chrysene-d_{12}, and perylene-d_{12}, were added to the extracts such that the final internal standard concentration was 40 ug/mL immediately prior to analysis by GC/MS.

The GC/MS analysis conditions are listed below:

GC Conditions:	
Column:	J&W DB5-625, 30m x .32mm x 1*u*m
Program:	35C, ramp at 12C/min to 285C, hold for 2 min. ramp at 8.5C/min to 315 C, hold for 6.5 min.
Carrier Gas:	Helium
MS Conditions:	
Instrument:	HP MSD, Chemsystem and Target data systems
Scan:	35-550 amu at 1.67 scan/sec
Interface:	Capillary, Injector: 250C, Detector: 275C

Report:

Enclosed with the case narrative are the sample identification index, project summary sheets, client and TLI chain of custody sheets, wet laboratory extraction information sheets, GC/MS tracking forms, and analytical run logs. The sample identification index correlates the client sample name, TLI sample number and the analytical file name for the each sample. The project summary sheets list the amounts of analytes detected in gray and list the estimated detection limits in parentheses for analytes that were not detected.

The data are reported as quantitation reports, chromatograms, interim reports, and spectra of detected target analytes and TIC's. The quantitation report header lists the TLI project number, analysis method, instrument sample file name, and client sample name. The client project number, TLI sample number, calibration file, dilution factor, and date received, extracted, and analyzed are also listed in the quantitation report header. The response factors used for all calculations are from the initial calibration listed in the header. All initial and continuing calibration data are located in the back of the data package. The amount reported for each target analyte detected in the samples is reported in total ug. The retention time (RT) will be listed for all internal standards and analytes that are detected. If a target analyte is not detected, it will be flagged with a "U" and a detection limit will be listed. Estimated detection limits are calculated using an area of 10,000 for all analytes that were not found in the samples. The estimated detection limits reported are the average detection limits achievable over time on an instrument type. The actual detection limit for a given compound on a given day may vary from the estimate reported. The quantitation limit for all analytes is half of the low point of the initial calibration adjusted for dilution when appropriate. Below this point the calibration cannot be considered to be linear. Any amounts reported at a level below the quantitation limit will be flagged with a "J" and should be considered estimated. If a target analyte is found at a level exceeding the upper calibration limit, it will be flagged with an "E" and should also be considered estimated. Any analytes flagged with a "B" on the sample topsheets were detected in the associated laboratory blank. All target analytes are quantitated against the internal standard preceding them on the target analyte list. Surrogate standards are quantitated against the internal standard with the matching internal standard reference number. For example, terphenyl-d_{14} has 5 in the IS Ref column and would be quantitated against the internal standard that has IS5 listed in the flag column.

In addition to the quantitation report, a tentatively identified compound (TIC) report is also present. The TIC report includes the TIC name, retention time and area, and the internal standard retention time and area. TIC's are reported when they elute within a window of minus one minute from the first and plus one minute from the last target analytes' retention times, and are greater than ten percent of the nearest internal standard area. The results should be considered estimates because they are calculated using the total ion current areas of the internal standards. These TIC's were searched against the NIST library and the best three matches were obtained. From this information a tentative identification was assigned. All of the spectral searches are included in the data package behind the spectra of the target analytes.

Immediately following the TIC report are two pages that comprise the total ion chromatograms. Labeled internal and surrogate standards present in the sample have their identifications and retention time printed above their peak on the chromatogram. The chromatogram is followed by the interim report. On the interim report a $ is indicative of a surrogate standard and a * represents an internal standard. The interim report from the instrument is followed by the target spectra of detected compounds. Four spectral plots are included for each compound: a raw spectrum of the peak, a background subtracted version of the same spectrum, a library spectrum of the compound, and a plot showing the percent difference between the library spectrum and the background subtracted spectrum. Extracted ion current profiles are plotted on the right-hand side of the page showing the quantitation mass and one or two other prominent ions known to be present in target compound as they appear in the sample peak.

(2)

Results:

Due to Y2K (year 2000) software problems, the raw data for the analyses exhibit an incorrect year, but do have the correct month and day. The hardcopy data has been hand corrected.

All samples were extracted and analyzed within the Method 8270 holding times.

No target analytes were found in the laboratory blank.

Please note that while Method 8270 Table 2 lists bis(2-chloroisopropyl)ether, this compound is not listed on the quantitation reports. The reports list 2,2'-oxybis(1-chloropropane) which is a structural isomer. These compounds coelute and are considered equivalent. Please note that the target analyte n-nitrosodiphenylamine cannot be distinguished from diphenylamine.

Up to twenty of the largest non-target analyte peaks have been reported as TIC's.

A set of laboratory control spike (LCS)/LCS Duplicate samples was prepared and analyzed along with the samples. Results for the LCS/LCS Dup samples are reported as a summary that is included in the data package.

All surrogate standard percent recoveries for samples SI-M0010-23AR3, SI-M0010-23AR4, SO-M0010-23AR2, and SO-M0010-23AR3 were within the in-house quality control limits. Sample SI-M0010-23AR2 exhibited a slightly high recovery for nitrobenzene-d_5. Sample SO-M0010-23AR4 exhibited a slightly low recovery for 2,4,6-tribromophenol. Sample Blank-M0010-23A exhibited a high recovery for terphenyl-d_{14}. The laboratory blank exhibited a very low recovery for 2,4,6-tribromophenol. The LCS and LCSD exhibited slightly high recoveries for phenol-d_5, nitrobenzene-d_5, and terphenyl-d_{14}. The in-house quality control limits are defined by the following 95 percent confidence intervals:

65%

29%

Surrogate Standards	Mean	95% confidence interval
phenol-d_5	70	28.39 - 112.40
nitrobenzene-d_5	68	30.52 - 105.65
2-fluorobiphenyl	77	37.70 - 115.87
2,4,6-tribromophenol	78	32.43 - 123.81
terphenyl-d_{14}	77	18.86 - 135.64

Sample Calculations:

Response Factor, RF = $\frac{\text{Area analyte x Amt IS}}{\text{Area IS x Amt analyte in calibration standard}}$

Amount ug = $\frac{\text{Area analyte x Amt IS x DF}}{\text{Area IS x avg RF}}$

TIC Amount ug = $\frac{\text{Total Ion Current Area analyte x Amt IS x DF}}{\text{Total Ion Current Area IS}}$

Where:

Amt IS = amount of internal standard = 40 ug
DF = dilution factor
avg RF = average RF from initial calibration

The data reported have been judged to be valid and in compliance with the guidelines of Method 8270C Rev. 3 (12/96) except as noted above. Should you have any questions about this project, please feel free to contact a Customer Service Representative at (919) 544-5729.

For Triangle Laboratories, Inc.,

Report Preparation:

Jim Woodhouse

Jim T. Woodhouse

Report Preparation Chemist

Quality Control:

Penny A. Brock

Penny A. Brock

Report Preparation Chemist

The total number of pages in this data package is 352.

VOC's

(5)

CASE NARRATIVE

Analysis of Samples for the Presence of

Volatile Analytes by

High-Resolution Gas Chromatography / Low-Resolution Mass Spectrometry

METHOD 8260B Rev. 2 (12/96)

Date :	April 2, 2001
Client ID :	Fuller Air Compliance
TLI Project Number :	53385

This report should only be reproduced in full. Any partial reproduction of this report requires written permission from Triangle Laboratories, Inc.

Objective: Analysis of seven VOST tube pairs for volatile compounds and Tentatively Identified Compounds (TIC's)., using Method 8260B.

Method:

Nine VOST tube pairs and eight condensate samples were received at Triangle Laboratories, Inc. on March 21, 2001 at 6°C in good condition. The samples were stored in a refrigerator at 4°C prior to analysis. Analytical results reported in this data package pertain to the analysis of seven of the VOST tube pairs. The VOST tubes were analyzed according to the guidelines of Methods 8260B and 5040. The internal standards and surrogate standards were added in the amount of 0.25 micrograms (ug) immediately prior to analysis by GC/MS. The internal standards are pentafluorobenzene, 1,4-difluorobenzene, chlorobenzene-d_5 , and 1,4-dichlorobenzene-d_4, and the surrogate standards reported are dibromofluoromethane, toluene-d_8, and 4-bromofluorobenzene. The results reported relate only to the items tested.

The GC/MS analysis conditions are listed below:

Purge and trap:	Tekmar LSC-2000
Purge:	11 min.
Desorb Temperature:	250 C
Desorb Time:	4 min.

GC Conditions:

Column:	30 m x .53 mm x 0.3*u* J&W DB624 0 C hold .5 min, 10 C/min to 45C, 6 C/min to 90C, hold 1.5 min, 50 C/min to 200C.

MS Conditions:

Instrument:	VG-TRIO-1 Lab Base data system
Scan:	35-350 amu at .6s/scan
Interface:	Jet Separator, 200 C

Report:

Enclosed with the case narrative are copies of the sample identification index, the project summary sheets, client paperwork, sample log-in sheets, and log book pages. A sample identification index summarizes the client sample name, TLI sample number, and analytical file name for each sample and blank. The project summary lists the amounts for detected analytes in gray. The estimated detection limits will be listed in parentheses when the target analytes are not detected.

The data are reported as quantitation reports, chromatograms, interim reports, and spectra of detected target analytes and TIC's. The quantitation report header lists the TLI project number, analysis method, instrument sample file name, client sample name, client project number, TLI sample number, calibration file, date received, and analysis date. The response factors used for all

calculations are from the calibration file listed in the header. All initial and continuing calibration data are located in the back of the data package. The amount is reported in total ug for the VOST tubes. The retention time (RT) will be listed for all internal standards and analytes that are detected. If a target analyte is not detected, it will be flagged with a "U" and a detection limit will be listed. Estimated detection limits are calculated for all analytes that were not found in the samples by using an area of 2000. The estimated detection limits reported are the average detection limits achievable over time on an instrument type. The actual detection limit for a given compound on a given day may vary from the estimate reported. The quantitation limit for all analytes is half of the low point of the initial calibration. Below this point the calibration cannot be considered to be linear. Any amount reported at a level below the quantitation limit will be flagged with a "J" and should be considered estimated. If any compounds are found at a level above the upper calibration range, the analyte will be flagged with an "E" and the amounts reported should be considered estimated. If any target analytes found in the laboratory blanks are detected in the associated samples, they will be flagged with a "B" on each sample topsheet. All analytes are quantitated against the internal standard preceding them on the target analyte list. Surrogate standards are quantitated against the internal standard with the matching internal standard reference number. For example, toluene-d_8 has 2 in the IS Ref column and would be quantitated against the internal standard that has IS2 listed in the flag column.

In addition to the quantitation report, a tentatively identified compound (TIC) report is also present. The TIC report includes the TIC name, retention time and area, and the internal standard retention time and area. TIC's are reported when they elute within a window of minus one minute from the first and plus one minute from the last target analytes' retention times, and are greater than ten percent of the nearest internal standard area. The results should be considered estimates because they are calculated using the total ion current areas of the internal standards. These TIC's were searched against the NIST library and the best three matches were obtained. From this information a tentative identification was assigned. All of the spectral searches are included in the data package behind the spectra of the target analytes.

Results:

The VOST tube pairs were analyzed within the fourteen day holding time, in tandem per client request.

The laboratory blanks contained several target analytes at levels below the quantitation limit. One laboratory blank (VOSTBLK 032601) contained the target analytes, 2-butanone, acetone, and chloromethane, at levels slightly above the quantitation limit. The target analytes in a laboratory blank should not be considered as truly present in the native samples unless found at a level at least five times the amount found in the associated blank. In the event that the amount of a target analyte found in the samples is twenty times the amount found in the associated blank, the contribution from the blank can be considered negligible. ?

Please note that VOST tube pairs SI-M0030-R4 109/110 and SO-M0030-R4 147/148 have been analyzed and reported in place of samples SI-M0030-R1 100/101 and SO-M0030-R3 143/144. These backup VOST tube pairs were analyzed due to very poor surrogate recoveries in VOST tube pair SI-M0030-R1 100/101 and to loss of data acquisition for VOST tube pair SO-M0030-R3 143/144.

Many target analytes were found at amounts above the upper calibration limit of one microgram in the samples. These compounds are flagged with "E" and the amounts reported should be considered estimated. Also, several target analytes were found at levels that were sufficiently high enough to saturate the instrument detector. These compounds are flagged with "SAT" and the amounts reported should be considered underestimated. Saturated analytes can interfere with the detection or quantitation of coeluting target analytes or standards.

Up to ten of the largest non-target peaks were reported as TIC's. The majority of non-target analytes were identified as thiophene, substituted furandiones, methylthiophene isomers, methylfuran isomers, and alkanes.

All surrogate standard percent recoveries were within quality control limits for all field samples with the SI- prefix, BLANK-M0030 173/174, and the laboratory blanks. For the field samples with the SO- prefix, somewhat high surrogate standard percent recoveries were exhibited for either dibromofluoromethane or 4-bromofluorobenzene.

Sample Calculations:

Response Factor (RF) = $\frac{\text{(area analyte) x (amt IS)}}{\text{(area IS) x (amt analyte)}}$

Amount (ug) = $\frac{\text{(area analyte in sample) x (amt IS)}}{\text{(area IS) x (avg ical RF)}}$

TIC amount (ug) = $\frac{\text{(Total Ion Current Area of TIC) x (amt IS)}}{\text{(Total Ion Current Area of IS)}}$

Where:

amt IS = amount of internal standard = 0.25 ug
ical = initial calibration

The data in this package have been judged to be valid according to the guidelines of Methods 8260B and 5040, except as noted above. Should you have any questions, please feel free to contact the Customer Service Representative at (919) 544-5729.

For Triangle Laboratories, Inc.,

Report Preparation:

Penny A. Brock

Penny A. Brock
Report Preparation Chemist

Quality Control:

Donald Harvan

Donald Harvan
Report Preparation Chemist

The total number of pages in this data package is 422.

PCDD/PCDF 8290

(3)

CASE NARRATIVE

Analysis of Samples for the Presence of

Polychlorinated Dibenzo-*p*-Dioxins and Dibenzofurans by

High-Resolution Chromatography / High-Resolution Mass Spectrometry

Method 8290 Rev. 0 (9/94)

Date:	March 14, 2001
Client ID:	Fuller Air Compliance
P.O. Number:	70155TC
TLI Project Number:	53198

This report should only be reproduced in full. Any partial reproduction of this report requires written permission from Triangle Laboratories, Inc.

Overview

The samples and associated QC samples were extracted and analyzed according to procedures described in EPA Method 8290 Rev. 0 (9/94). Any particular difficulties encountered during the sample handling by Triangle Laboratories will be discussed in the QC Remarks section below. This report contains results from only the 8290 dioxin/furan analyses of the three M23 Train samples.

Quality Control Samples

A laboratory method blank, identified as the TLI Blank, was prepared along with the samples.

Laboratory control spike (LCS) and laboratory control spike duplicate (LCSD) samples were extracted and analyzed along with the samples. A report summarizing the analyte recoveries and relative percent differences for these samples is included in the data package.

Quality Control Remarks

This release of this particular set of Fuller Air Compliance analytical data by Triangle Laboratories was authorized by the Quality Control Chemist who has reviewed each sample data package following a series of inspections/reviews. When applicable, general deviations from acceptable QC requirements are identified below and comments are made on the effect of these deviations upon the validity and reliability of the results. Specific QC issues associated with this particular project are:

Sample receipt: Three M23 Train samples were received from Fuller Air Compliance at 6.0 °C in good condition on March 06, 2001 and stored in a refrigerator at 4 °C. The client's chain-of-custody did not indicate whether or not chemical preservatives were utilized prior to shipment.

The impinger portions were listed on the chain of custody but were not received with the other portions.

Sample Preparation Laboratory: None

Mass Spectrometry: None

Data Review: The percent recoveries of 12378-PeCDD, 234678-HxCDF, and 123789-HxCDF in the LCS and LCSD are above the QC criteria (70-130%); however, the relative percent difference is within the QC criteria (< 20%). The percent recovery of 123478-HxCDF in the LCSD is slightly above the QC criteria (70-130%); however, the relative percent difference is within the QC criteria (< 20%). The results for the associated analytes in the field samples may be overestimated. All affected analytes in the field samples are non-detect or detected with concentrations below the target detection limits. As the detection limits for the non-detected analytes are below TDL, the results for these analytes are not significantly affected. OK

The ion abundance ratio for the 1234789-HpCDF surrogate standard in sample HDO-M23-R1/701,702,703,704 is outside QC limits. However, the percent recovery is within QC limits. As no analytes are quantified using this standard, the results were release with no further action OK

Other Comments: No 2,3,7,8-substituted target analytes were detected in the method blank above the target detection limit (TDL).

During analysis, it was discovered that the recovery standard solution used for these samples was not at nominal quantities specified by the method. The solution was tested and found to contain lower amounts of the 13C12-labeled 1234-TCDD and 123789-HxCDD recovery standards. All calculations associated with this project have been revised to accommodate this variation. Please note that since recovery standards are not used in analyte quantitation, analyte calculations are unaffected.

The analytical data presented in this report are consistent with the guidelines of EPA Method 8290 Rev. 0 (9/94). Any exceptions have been discussed in the QC Remarks section of this case narrative with emphasis on their effect on the data. Should Fuller Air Compliance have any questions or comments regarding this data package, please feel free to contact a Project Scientist at (919) 544-5729.

For Triangle Laboratories, Inc.,

Released by,

Kenneth Varley

Kenneth Varley

Report Preparation Chemist

The total number of pages in the data package is : 185 .

PCDD / PCDF

(4)

CASE NARRATIVE

Analysis of Samples for the Presence of

Polychlorinated Biphenyls by

High-Resolution Chromatography / High-Resolution Mass Spectrometry

Date:	April 12, 2001
Client ID:	Fuller Air Compliance
P.O. Number:	70155-DA
TLI Project Number:	53386B

This report should only be reproduced in full. Any partial reproduction of this report requires written permission from Triangle Laboratories, Inc.

Rev. 05/08/97

Overview

Seven XAD samples were received from Fuller Air Compliance in good condition March 21, 2001 at 7.0 °C and stored in a refrigerator at 4°C. The samples were extracted and analyzed by Triangle Laboratories' WHO List procedures. Any particular difficulties encountered during the sample handling by Triangle Labs will be discussed in the QC remark section below. Results relate only to the items tested.

Quality Control Samples

A laboratory method blank, identified as the TLI Blank, was prepared along with the samples.

Laboratory control spike (LCS) and laboratory control spike duplicate (LCSD) samples were extracted and analyzed along with the samples. A report summarizing the analyte recoveries and relative percent differences for these samples is included in the data package.

QC Remarks

The release of this particular set of Fuller Air Compliance analytical data by Triangle Labs was authorized by the Quality Control Chemist who has reviewed each sample data package individually following a series of inspections/reviews. When applicable, general deviations from acceptable QC requirements are identified below. Specific QC problems associated with this particular project are:

Sample Preparation Laboratory: None

Mass Spectrometry: None

Data Review: Please note there are no limits for recovery or ion abundance ratios for the MonoCB, DiCB, or TriCB internal standards. The chemistry of these compounds is such that recovery limits for these compounds can not be guaranteed. The reported limits are advisory limits only. The software applies the "V" flag based on these advisory limits.

The percent recoveries of some of the labeled standards in the field samples are outside QC limits. This indicates that reported concentrations of the associated analytes could be correspondingly low. The ion abundance ratios for some of the standards are also outside QC limits. As the QC samples did not similar recoveries this problem is considered matrix related, and the results were released with no further action. How Low?

The analysis of some of the field samples exhibit the presence of saturated analyte signals (signals outside the dynamic range of the instrument). The affected analytes are flagged "S" on the quantitation report. The results for these analytes should be considered minimum estimates of the actual concentrations present in the samples

By our interpretation, the analytical data in this project is valid based on the guidelines of Triangle Laboratories' WHO List procedures. Any specific QC concerns or problems have been discussed in the QC REMARKS section with emphasis on their affect on the data. Should Fuller Air Compliance have any questions or comments regarding this data package, please feel free to contact our Project Scientist, Thomasina Austin, at (919) 544-5729 ext. 257.

For Triangle Laboratories, Inc.,

Released By,

Jennifer Hass
Report Preparation Chemist

The total number of pages in this data package is : 383

Hexavalent Cr

PROJECT NARRATIVE

PHILIP Analytical Services Inc (Burlington ON)
Philip Project: AN010302
Philip Submission #:1C0711

Client: York Service Corporation
Client Project: JCI UPCYCLE-70155

I. SAMPLE RECEIPT/ANALYSIS

a) Sample Listing

Philip BC ID	Philip ON ID	Client Sample ID	Date Sampled	Date Received	Date Prepped	Run Date
Chromium VI via SW846 Method 0061/7199						
11016634	012984 01	531 M0061-Blank	01/03/15	01/03/23	01/03/27	01/03/27
11016635	012985 01	516 M0061-SO R1	01/03/15	01/03/23	01/03/27	01/03/27
11016636	012986 01	521 M0061-SO R2	01/03/15	01/03/23	01/03/27	01/03/27
11016637	012987 01	526 M0061-SO R3	01/03/15	01/03/23	01/03/27	01/03/27
11016638	012988 01	501/502 M0061-SI R1	01/03/15	01/03/23	01/03/27	01/03/27
11016639	012989 01	506/507 M0061-SI R2	01/03/15	01/03/23	01/03/27	01/03/27
11016640	012990 01	511/512 M0061-SI R3	01/03/15	01/03/23	01/03/27	01/03/27

Run Date is defined as the date of injection of the last calibration standard (12 hour or less) prior to the samples analyzed within that run sequence. Therefore the time of calibration injection that defines the run date is always within 12 hours of the time of sample injection.

b) Shipping Problems: none encountered

c) Documentation Problems: none encountered

II. SAMPLE PREP:

No problems encountered

III. SAMPLE ANALYSIS:

See also comments within the appropriate Certificate of Analysis.

a) Hold Times: all within recommended hold times

b) Instrument Calibration: all within control limits

c) Surrogate/Internal Recoveries: except where noted otherwise, all within control limits

I certify that this data package is in compliance with the terms and conditions of the contract,

both technically and for completeness, for other than the conditions detailed above.
In addition, I certify, that to the best of my knowledge and belief, the data as reported are true and accurate.
Release of the data contained in this data package has been authorized by the cognizant laboratory official or his/her designee, as verified by this signature.

Shari Typer, Project Manager

May 1, 2001
Date

PHILIP ANALYTICAL SERVICES

Case Narrative

To: Shari Typer

Date: April 26, 2001

From: Robert Gilbert
Inorganic Manager

File: CSNRCR6_0035

CC: BH

Page: 1 of 1

Subject: Case Narrative for Hexavalent Chromium Analyses of Sample # 16634-40 (Burl #12984-90)

All samples were analysed in accordance to EPA Method 7199. All results are reported from the March 27, 2001 IC run.

Notes:

- NIST 2109 Chromium VI (1000 mg/L) was used to make up the standards used in this analyses. The coefficient of correlation for the calibration curve was 0.999.
- All samples and blanks were diluted fivefold and hence were reported with a 0.001 mg/L detection limit. The samples were checked with an acid/base test that showed a concentration higher than 0.1N KOH.
- All quality control criteria were met.

Robert Gilbert
Inorganics Manager

TOTAL Chromatographable Organics

PROJECT NARRATIVE

PHILIP Analytical Services Inc (Burlington ON)
Philip Project: AN010302
Philip Submission #:1C0564

Client: York Service Corporation
Client Project: JCI UPCYCLE-70155

I. SAMPLE RECEIPT/ANALYSIS

a) Sample Listing

Philip ID	Client Sample ID	Date Sampled	Date Received	Date Prepped	Run Date
Total Extractable Chromatographable Organics via EPA/600/R-96/036					
012257 01	Method Blank	01/03/16	01/03/20	01/04/12	01/04/12
012258 01	MTCO, Blank	01/03/16	01/03/20	01/03/22	01/04/12
012259 01	SO-MTCO, R1 Outlet	01/03/16	01/03/20	01/03/22	01/04/12
012260 01	SO-MTCO, R2 Outlet	01/03/16	01/03/20	01/03/22	01/04/12
012261 01	SO-MTCO, R3 Outlet	01/03/16	01/03/20	01/03/22	01/04/18
012262 01	SI-MTCO, R1 Inlet	01/03/16	01/03/20	01/03/22	01/04/18
012263 01	SI-MTCO, R2 Inlet	01/03/16	01/03/20	01/03/22	01/04/12
012264 01	SI-MTCO, R3 Inlet	01/03/16	01/03/20	01/03/22	01/04/12
Gravimetric Organics via EPA/600/R96/036					
012257 01	Method Blank	01/03/16	01/03/20	01/04/02	01/04/04
012258 01	MTCO, Blank	01/03/16	01/03/20	01/04/02	01/04/04
012259 01	SO-MTCO, R1 Outlet	01/03/16	01/03/20	01/04/02	01/04/04
012260 01	SO-MTCO, R2 Outlet	01/03/16	01/03/20	01/04/02	01/04/04
012261 01	SO-MTCO, R3 Outlet	01/03/16	01/03/20	01/04/02	01/04/04
012262 01	SI-MTCO, R1 Inlet	01/03/16	01/03/20	01/04/02	01/04/04
012263 01	SI-MTCO, R2 Inlet	01/03/16	01/03/20	01/04/02	01/04/04
012264 01	SI-MTCO, R3 Inlet	01/03/16	01/03/20	01/04/02	01/04/04

Run Date is defined as the date of injection of the last calibration standard (12 hour or less) prior to the samples analyzed within that run sequence. Therefore the time of calibration injection that defines the run date is always within 12 hours of the time of sample injection.

b) Shipping Problems: none encountered

c) Documentation Problems: none encountered

II. SAMPLE PREP:

No problems encountered

III. SAMPLE ANALYSIS:

See also comments within the appropriate Certificate of Analysis.

a) Hold Times: all within recommended hold times

b) Instrument Calibration: all within control limits

c) Surrogate/Internal Recoveries: except where noted otherwise, all within control limits

I certify that this data package is in compliance with the terms and conditions of the contract, both technically and for completeness, for other than the conditions detailed above.
In addition, I certify, that to the best of my knowledge and belief, the data as reported are true and accurate.
Release of the data contained in this data package has been authorized by the cognizant laboratory official or his/her designee, as verified by this signature.

Ronald A. McLeod, Principal Sci., Ph.D.,C.Chem.

Date April 24, 2001.

$C_1 - C_7$

Enthalpy Analytical Narrative Summary

Company:	York Analytical, Inc.
Client #:	01-70155
PO #:	4506

Enthalpy #:	0301-51
Analyst:	SJE
Parameters:	SW-846 M0040

Custody

Scott Grosshandler of Enthalpy Analytical, Inc. received the samples on 3/17/2001 after being relinquished by York Analytical, Inc. No apparent container problems were noted upon receipt. Prior to and during analysis, the samples were kept under lock, with access only to authorized personnel of Enthalpy Analytical, Inc.

Analysis

The samples were analyzed using the analytical procedures in SW-846 M0040. All samples and standards were injected into the GC using a VICI 6-port gas loop injection system. The analyzer was a Hewlett-Packard 5890 Series II Gas Chromatograph equipped with a flame ionization detector using hydrogen as the carrier gas. All compounds were referenced to certified gas phase standards.

Separation

The samples were separated using a 30m x 0.32 mm ID capillary column. All calibration curve(s) and quality assurance point(s) are located in the "Curves" section of the report and referenced in the "Cal. Curve" section on the Results page. The following table shows approximate retention times for each analyte.

Analyte	Retention Time
Methane	1.14
Ethane	1.25
Propane	1.45
Butane	2.13
Pentane	3.31
Hexane	4.74
Heptane	6.05

Chromatographic Conditions

Initial temperature:	38°C, hold for 0.5 minutes
1st Ramp:	6.5°C per minute to 50°C
2nd Ramp:	20°C per minute to 170°C, hold for 2 min.
Net Run Time	10.4 minutes
Pressure Constant:	5.5 psi at 45°C
Detector temperature:	225°C

Reproducibility

All standards were within 10% of their tag value.

Reporting Notes

The symbols *MDL* and *LOQ* represent the Minimum Detection Limit and the Limit of Quantification.

The symbol *J* following a value indicates an analytical result between the MDL and the LOQ.

The symbols *ND* following a value indicate a non-detect or analytical result below the MDL.

The symbol *E* following a value indicates an analytical result exceeding, but within 25% of, the highest calibration point unless otherwise noted in the narrative.

Enthalpy Analytical Narrative Summary

Company:	York Analytical, Inc. / JCI Upcycle
Client #:	01-70155
PO #:	4506

Enthalpy #:	0301-51
Analyst:	DMB
Parameters:	SW-846 M0040

Custody

Scott Grosshandler received the samples on 03/17/2001 after being relinquished by York Analytical, Inc. No apparent container problems were noted upon receipt. Prior to and during analysis, the samples were kept under lock with access only to authorized personnel of Enthalpy Analytical, Inc.

Analysis

The samples were analyzed by sparging a 5 ml aliquot using a OI purge & trap 4460A for 5 minutes. Samples were desorbed for 4 minutes at 180°C with a 6-minute bake out at 180°C. The analyzer was a Hewlett-Packard 5890 Series II Gas Chromatograph equipped with a flame ionization detector using hydrogen as the carrier gas. C_5 - C_7 compounds were referenced to pentane, hexane and heptane standards. All peak areas within the specified time range were summed and referenced to the appropriate standard curve.

Separation

The samples were separated using a Restek 30m x 0.32 mm ID Rtx-1 capillary column. All calibration curve(s) and quality assurance point(s) are located in the "Curves" section of the report and referenced in the "Cal. Curve" section on the Results page. The following table shows approximate retention times for each analyte.

Analyte	Retention Time
Pentane	3.84
Hexane	5.05
Heptane	6.22

Chromatographic Conditions

Initial temperature:	45°C, hold for 1.1 minutes
Ramp:	17.5°C per minute to 185°C
Net Run Time	9.1 minutes
Pressure Constant:	5.5 psi at 45°C
Detector temperature:	225°C

Reproducibility

All standards were within 10% of their tag value.

Reporting Notes

The symbols *MDL* and *LOQ* represent the Minimum Detection Limit and the Limit of Quantification.

The symbol *J* following a value indicates an analytical result between the MDL and the LOQ.

The symbols *ND* following a value indicate a non-detect or analytical result below the MDL.

The symbol *E* following a value indicates an analytical result exceeding, but within 25% of, the highest calibration point unless otherwise noted in the narrative.

PCDD/F 8290

PROJECT NARRATIVE

PHILIP Analytical Services Inc (Burlington ON)
Philip Project: AN010302
Philip Submission #:1C0612

Client: York Service Corporation
Client Project: JCI UPCYCLE-70155

I. SAMPLE RECEIPT/ANALYSIS

a) Sample Listing

Philip BC/ON ID	Philip ON ID	Client Sample ID	Date Sampled	Date Received	Date Prepped	Run Date
Analysis from PSC - Mississauga, ON						
Total Organic Carbon via Combustion - LECO						
	012489 01	Method Blank	01/03/16	01/03/21	01/04/05	01/04/05
	012491 01	Upcycle Shale	01/03/16	01/03/21	01/04/05	01/04/05
	012495 01	U.P. (80194-80195)	01/03/14	01/03/21	01/04/05	01/04/05
	012496 01	U.P. (80196-80197)	01/03/15	01/03/21	01/04/05	01/04/05
	012497 01	U.P. (80198-80199)	01/03/14	01/03/21	01/04/05	01/04/05
	012498 01	Baghouse (80200)	01/03/14	01/03/21	01/04/05	01/04/05
	012499 01	Baghouse (80201)	01/03/15	01/03/21	01/04/05	01/04/05
	012500 01	Baghouse (80202)	01/03/14	01/03/21	01/04/05	01/04/05
Analysis from PSC - Reading, PA						
Total Chlorine, Bromine and Fluorine via SW846 Methods 5050/9056 - IC						
1443138	012490 01	#2 Fuel Oil	01/03/16	01/03/21	01/03/26	01/03/26
1443651	012491 01	Upcycle Shale	01/03/16	01/03/21	01/03/29	01/03/29
1443653	012492 01	Upcycle Feed (80191)	01/03/14	01/03/21	01/03/29	01/03/29
1443654	012493 01	Upcycle Feed (80192)	01/03/15	01/03/21	01/03/29	01/03/29
1443656	012494 01	Upcycle Feed (80193)	01/03/14	01/03/21	01/03/29	01/03/29
1443657	012495 01	U.P. (80194-80195)	01/03/14	01/03/21	01/03/29	01/03/29
443658/1443659	012496 01	U.P. (80196-80197)	01/03/15	01/03/21	01/03/29	01/03/29
1443660	012497 01	U.P. (80198-80199)	01/03/14	01/03/21	01/03/29	01/03/29
PCDD/F(DB5) via SW846 Method 8290-Primary Column Analysis						
	012489 01	Method Blank	01/03/16	01/03/21	01/04/02	01/04/11
	012492 01	Upcycle Feed (80191)	01/03/14	01/03/21	01/04/02	01/04/11
	012493 01	Upcycle Feed (80192)	01/03/15	01/03/21	01/04/02	01/04/11
	012494 01	Upcycle Feed (80193)	01/03/14	01/03/21	01/04/02	01/04/11
	012495 01	U.P. (80194-80195)	01/03/14	01/03/21	01/04/02	01/04/11
	012496 01	U.P. (80196-80197)	01/03/15	01/03/21	01/04/02	01/04/11
	012497 01	U.P. (80198-80199)	01/03/14	01/03/21	01/04/02	01/04/11
	012498 01	Baghouse (80200)	01/03/14	01/03/21	01/04/02	01/04/11
	012499 01	Baghouse (80201)	01/03/15	01/03/21	01/04/02	01/04/11
	012500 01	Baghouse (80202)	01/03/14	01/03/21	01/04/02	01/04/11

2,3,7,8-TCDF (DB225) via SW846 Method 8290-Confirmational Analysis

012489 01	Method Blank	01/03/16	01/03/21	01/04/02	01/04/24
012492 01	Upcycle Feed (80191)	01/03/14	01/03/21	01/04/02	01/04/24
012493 01	Upcycle Feed (80192)	01/03/15	01/03/21	01/04/02	01/04/24
012494 01	Upcycle Feed (80193)	01/03/14	01/03/21	01/04/02	01/04/24
012495 01	U.P. (80194-80195)	01/03/14	01/03/21	01/04/02	01/04/24
012496 01	U.P. (80196-80197)	01/03/15	01/03/21	01/04/02	01/04/24
012497 01	U.P. (80198-80199)	01/03/14	01/03/21	01/04/02	01/04/24
012498 01	Baghouse (80200)	01/03/14	01/03/21	01/04/02	01/04/24
012499 01	Baghouse (80201)	01/03/15	01/03/21	01/04/02	01/04/24
012500 01	Baghouse (80202)	01/03/14	01/03/21	01/04/02	01/04/24

Run Date is defined as the date of injection of the last calibration standard (12 hour or less) prior to the samples analyzed within that run sequence. Therefore the time of calibration injection that defines the run date is always within 12 hours of the time of sample injection.

b) Shipping Problems: none encountered

c) Documentation Problems: none encountered

II. SAMPLE PREP:

No problems encountered

III. SAMPLE ANALYSIS:

See also comments within the appropriate Certificate of Analysis.

a) Hold Times: all within recommended hold times

b) Instrument Calibration: all within control limits

c) Surrogate/Internal Recoveries: except where noted otherwise, all within control limits

I certify that this data package is in compliance with the terms and conditions of the contract, both technically and for completeness, for other than the conditions detailed above.
In addition, I certify, that to the best of my knowledge and belief, the data as reported are true and accurate.
Release of the data contained in this data package has been authorized by the cognizant laboratory official or his/her designee, as verified by this signature.

Shari Typer, Project Manager

May 1, 2001
Date

"PILOT PROGRAM WORK PLAN"

Submitted by

JCI/UPCYCLE Associates, LLC

December 2, 1999

A. DREDGING

A clamshell dredge has excavated approximately 2000 cubic yards of sediment from Berth 1 at the Stratus Petroleum Facility located on the Lower Passaic River in Upper Newark Bay, NJ. The dredge area footprint was approximately 200 linear feet by 90 feet. The specific area to be dredged was coordinated with NJ Maritime Resources and Stratus Petroleum in order to optimize the most needed area. The dredge utilized a 5 cubic yard closed clamshell bucket, digging to the design depth of 25 feet below Mean Low Water. The dredge loaded directly into scows without overflow. The dredged material is currently awaiting project commencement. When dockside, the dredged material will be scalped to remove debris and any grossly oversized materials (+3"). Debris will be collected and delivered via "roll off" container to the nearest permitted solid waste landfill (to be stipulated).

The dredged material will be removed from the hopper scow by pumping with a "Dragflow" pump. The submersible "Dragflow" pump apparatus will be suspended in the hopper scow by means of a backhoe. The pump will transport the slurry approximately 500 linear feet through a flexible 6-inch pipeline to a 20000-gallon capacity agitated process tank, located at the Stratus facility (see facility layout drawing).

B. DEWATERING

The area in which the dewatering process will occur will be graded and leveled to provide a total working space of approximately 100 feet by 50 feet. A layer of 40 mil HDPE will be placed on the graded and level surface as a precaution in the event of any spillage. The process area will be provided with a hay bale berm surrounding the work area as an added measure of security in the event of any spillage.

The area to be utilized for intermediate storage (approximately 50 feet by 200 feet) for the dewatered pelletized dredged material will be similarly prepared and also covered with a layer of 40 mil HDPE.

Previously scalped dredged material (i.e. that which has had all +3"removed) will be fed to a final scalping screen sized for minus ½" material. Any oversized dredged material will be collected and recycled through the process. Coincidentally, dilution water will be added and mixed with the ½" minus material passing through the scalping screen and will be collected in an intermediate, agitated vessel with a nominal capacity of 20000 gallons. This intermediate feed slurry will be pumped to the in-line "flo-line" scalper located atop the slurry tank. The flo-line scalper is sized to pass all material through a minus 35-mesh screen. Any material larger than 35-mesh will be collected and reintroduced to the dewatering system at the intermediate holding vessel.

The slurry from the holding tank will be pumped to the Solomon Technologies tracking grid (the initial dewatering equipment) via a feed pump. Coincident with the feeding to the tracking grid, controlled polymer addition will be made.

The collected solids from the tracking grid will be fed to the belt filter press for the second dewatering stage. Return water from the initial dewatering step and the return water from the second dewatering step, will be collected and pumped back to the front of the dewatering process to be used as dilution water. The portion of the collected return water not required for dilution will be tested prior to discharge to its originating water source via surface discharge. Characterization and testing of this water will be in accordance with the procedures outlined in the Sampling and Analysis Plan protocol referenced herein.

The dewatered dredged material filter cake from the belt press (approximately 65% solids by weight) will be fed to a pelletizer prior to discharge and stored at the intermediate storage area pending final transport to Norlite.

C. TRANSPORTATION TO NORLITE

Transportation to Norlite Corporation at Cohoes, NY, of pelletized dredged material for purposes of the Pilot Program, will be by haulers employing covered (tarpaulin) dump trailers. The dump trailers will be equipped with leak-proof tailgates and secured by clamps. Additionally, the tailgates will be caulked with silicon sealant to provide an additional measure of security. Loading and transport will occur when sufficient material becomes available to optimize the load and minimize expense. For estimating purposes 30 tons (approximately) per load is contemplated. Based upon an estimated 1200 tons of solids being recovered from the dredged material, it is projected that 40 loads will be shipped to Norlite throughout the course of the project. All material will be weighed at Norlite over its certified scale.

D. KILN PROCESSING AND AIR EMISSIONS TESTING AT NORLITE

A detailed handling, processing, environmental and sampling/testing protocol, i.e., "Study Plan," will be submitted to and agreed to by the New York State Department of Environmental Conservation. The "Study Plan" will be included by reference in the "Pilot Program" document agreed to by the State of New Jersey.

Prior to processing at Norlite, a small quantity of pelletized material will be tested at the Fuller Company to determine the optimum mix design (ratio of dredged material, shale fines and clay overburden) and to test for the necessity of inclusion of a bloating agent in the mix.

At the Norlite plant, after weighing, pelletized dredged material will be transported by means of a loader to the crushing/extrusion area of the plant. The pelletized dredged material will be fed into the crusher that will reduce the particle size to minus 100 mesh. Also fed to the crusher will be shale fines and overburden clay. This step will insure a homogeneous mixture to produce a high quality Lightweight Aggregate (LWA). From

the crusher the dry mixture will be fed to a pug mill at which time water will be added to bring the moisture level to 15-19%. This moisture is essential for proper extrusion to occur. Should a bloating agent be required it will be added at the pug mill step.

The pug mill will feed the blend directly into the extruder. The extruder will compress the mixture and extrude it through a die containing .375 inch and .500 inch holes. The extruded product will then be transported via loader to a hopper that will feed a conveyor and scale. Extruded product is weighed and fed directly to the kiln. The kiln is 175 feet long and 11 feet in diameter. Retention time of the extruded dredged material feedstock pellets in the kiln is approximately 45 minutes. This retention time raises the temperature of the material gradually until it reaches a temperature of approximately 2100-2200 degrees Fahrenheit.

The LWA produced in this manner will expand in size to about ¾ inch. Depending on the intended use of the product (Geotechnical fill, Concrete Masonry Units, or Structural Concrete) it may be shipped as is, or further processed in the Norlite "Finish Plant" which is essentially a crushing and sizing operation. Finished product is stored in stockpiles until it is loaded into trucks for shipment to projects.

It is estimated that approximately 50 hours of kiln time will be required to process the dredged material. One of the 2 Norlite kilns will be dedicated solely to this project. During that time the kiln will be set to optimum conditions required to make a quality product and a rigorous sampling campaign will be employed to monitor the process with the substitute "feedstock" (standard feedstock is crushed shale).

The sampling and testing program will be similar to the recently completed RCRA Trial Burn conducted at the facility. Parameters of interest for stack emissions on this Pilot Program test will be:

- Particulate matter
- Dioxins/Furans
- PCB's (if measured in the raw material)
- Semi-volatile Organic Compounds
- Volatile Organic Compounds
- Metals

Rationale for selection of the sampling and testing parameters is provided as follows.

Particulate Matter

The Norlite Air Pollution Control (APC) system is extremely efficient in removing particulate matter. Sampling and analysis using worst case scenario parameters including reduced pressure drop conditions across the baghouse and scrubber systems have proved this. It is possible that the prepared dredged material feed could potentially create more dust as it is being processed than does the shale feed since it is an extruded material made from much finer starting materials than shale. This has the potential of increasing the

dust load in the exhaust that will require removal by the baghouse and the scubber. Testing for particulate matter in the stack will ensure that the required removal efficiency is achieved, per USEPA and NYSDEC regulations.

Dioxins/Furans

Norlite's APC system is maintained to prevent the formation of polychlorinated dibenzodioxins and polychlorinated dibenzofurans. The USEPA regulatory limit for the emission of this class of compounds is extremely low (0.2 nanograms per dry standard cubic meter corrected to 7% oxygen). This Pilot test will determine the concentration of these compounds in the exhaust due to standards that will be required by USEPA and NYSDEC pursuant to the proposed hazardous waste combustor MACT rule.

Polychlorinated Biphenyls (PCB's)

For the same reason that dioxins and furans will be tested, PCB's also will be monitored.

Semi-Volatile and Volatile Organic Compounds

The Pilot test will determine that the trace organic compounds that may be present in the dredged material are completely combusted or otherwise removed from the air stream. The analyses will measure removal efficiency for organic compounds present in the dredged material.

Carbon Monoxide

Carbon monoxide is continuously monitored at Norlite. It is used as an indicator of complete combustion. In addition, the bloating agent, which may be added to the dredged material, may contribute to carbon monoxide emissions. The Pilot test will compare the carbon monoxide data using dredged material to carbon monoxide data generated from operation of the kiln using shale.

Norlite will also monitor the residuals from the APC system as was done during the recent Trial Burn. It is anticipated that the extruded dredged material will also be fully characterized with respect to trace organic compounds.

Metals

The 12 BIF (Boiler and Industrial Furnace) metals as defined by USEPA will be tested in accordance with appropriate techniques and protocols.

E. CHEMICAL TESTING PLAN and PHYSICAL TESTING PLAN

The specifics of JCI/UPCYCLE's testing plans to be performed during this Pilot program are provided in the document titled "Sampling and Analysis Plan – Sediment Decontamination Demonstration Project", as prepared and submitted on our behalf by GZAGeoEnvironmental, Inc. and referenced herein.

Chemical and physical parameters in the dredged material, intermediate products, and other process streams will be analyzed by standardized procedures specified within Appendix B-Analytical Procedures and Associated Quality Assurance/Quality Control Measures as detailed in The Management and Regulation of Dredged Activities and Dredged Material in New Jersey's Tidal Waters, October 1997.

All testing will be performed by laboratories holding certifications by the states of New Jersey and New York that can perform EPA approved methods and are capable of meeting or exceeding the applicable method detection limits (MDL).

Each laboratory employed will be required to submit a Quality Assurance Project Plan (QAPP) in order to assure that valid data are generated and used to evaluate the effectiveness of the technology in decontaminating the dredged material and in creating a beneficial and viable end product. The laboratory will archive representative samples.

Quality assurance objectives (i.e. precision, accuracy, method detection limits and completeness) for each of the analytical measurements will be in strict compliance with the referenced method. The guidance provided in Appendix B-Analytical Procedures and Associated Quality Assurance/Quality Control Measures will be followed. The data reports submitted will include a description of all methods used in the laboratory and will cite established methods. Further, an independent data validator will serve to review the quality control on all of the data generated from analytical laboratories. The objective of the data validation is to review analytical results for conformance with pre-established criteria. The independent data validator will objectively apply these criteria to:

- Ensure adherence to the methods specified for the preparation, handling, sampling, cleanup, and analysis.
- Ensure precision, accuracy and other QC parameters.
- Ensure that properly maintained and calibrated sampling and analytical equipment has been utilized in the course of the project.

Any deviations from the individual laboratory QAPP's will be noted and reported.

Specific analytical procedures to be used follow on the next page.

Grain Size/Percent Solids	ASTM D-422
TOC	EPA Method 9060
Volatiles	EPA Method 8260
Semi-Volatiles	EPA Method 8270C
Pesticides	EPA Method 8081A
Herbicides (not required by NJDEP)	EPA Method 8150A
Inorganic Metals	EPA Method 6010/7470
PCBs Aroclors and Congeners	EPA Method 8082
PCDD/PCDF	EPA Method 1613 Rev. B
TCLP	EPA Method 1311
MEP	EPA Method 1320

F. LIGHTWEIGHT AGGREGATE TESTING and UTILIZATION PLAN

1. Physical Testing Plan

Lightweight Aggregate (LWA) has long been a commodity construction material with broad utilization in both the public and private sectors of construction due to unique properties resulting from the rotary kiln manufacturing process. As a result, there exists a comprehensive body of standardized testing procedures employed to insure the suitability and quality of the material for engineering applications.

The purpose of the test program will be to examine the conformance to industry standards of LWA (produced utilizing dredged material as a primary feedstock) in structural concrete, concrete masonry units, and lightweight geotechnical fill.

Verbal agreement has been reached with the Materials Engineering Division of the Port Authority of New York and New Jersey, the NY Department of Transportation, and the NJ Turnpike Authority and the NJ Department of Transportation for the testing and utilization of "UPCYCLED" aggregate in agency construction projects.

Each of the agencies that we have met with has agreed to test the material according to their standards of material qualification, which are derived from industry standards as described below and to utilize the material in suitable engineering projects.

a. Structural Concrete

The testing requirements appropriate for these applications are ASTM C-330 "Standard Specification for Lightweight Aggregates for Structural Concrete".

b. Concrete Masonry Units

The testing requirements for these applications are ASTM C-331 "Standard Specification for Lightweight Aggregates for Concrete Masonry Units".

c. Geotechnical Fill

The testing requirements for this application are as follows:

Dry Loose Density	ASTM D- 4254
Dry Compacted Density	ASTM D- 4253
Strength	Consolidated Drainage
Gradation	ASTM C-136
Soundness	ASTM C-88
Abrasive Resistance	ASTM C-131 (B grading)
Permeability	ASTM D-2434
Resistivity	G-57 and CAL DOT 643

pH	CAL DOT 643
Chloride Content	CAL DOT 422
Sulfate Content	CAL DOT 417
Thermal Conductivity	ASTM C-177
Freeze and Thaw	AASHTO T-177
Specific Gravity and Absorption	
Coarse Aggregate	ASTM C-127

2. Chemical Testing Plan

For consistency, the LWA will be tested utilizing the same tests as the dredged material and intermediate product and will include:

Grain size/ percent solids	ASTM D-422
TOC	EPA Method 9060
Volatiles	EPA Method 8260
Semi-volatiles	EPA Method 8270C
Pesticides	EPA Method 8081A
Herbicides (not required by NJDEP)	EPA Method 8150A
Inorganic metals	EPA Methods 6010/7470
PCB's	EPA Method 8082
PCDD/PCDF	EPA Method 1613 Rev. B
TCLP	EPA Method 1311

3. Product Utilization Plan

Upon completion of production and following appropriate testing as defined above, the "UPCYCLED" aggregate will be utilized in an ongoing project at one or all of the referenced agencies in accordance with project availability and schedule. We will strive to apply the material into each of the broad categories of usage; structural concrete, concrete masonry units, and geotechnical fill.

Activity ID	Description	Orig Dur	Early Start	Early Finish
1000	AUTHORIZATION TO PROCEED	0	15DEC99	
1010	MOBILIZE FIELD OFFICE AND PERSONNEL	3d	26JAN00	28JAN00
1020	SITE PREPARATION	10d	26JAN00	08FEB00
1030	SCREENING-DEBRIS REMOVAL	2d	10FEB00	11FEB00
1040	AGITATION-DEWATERING PROCESS	30d	14FEB00	24MAR00
1050	HANDLE PELLETS/LOAD-OUT	15d	06MAR00	24MAR00
1060	EXTRUDED PELLET PREPARATION	20d	27MAR00	21APR00
1080	KILN PROCESSING	10d	24APR00	05MAY00
1090	SAMPLING/TESTING/REPORTING	60d	14FEB00	05MAY00
1100	DEMOBILIZE ALL EQUIPMENT	3d	27MAR00	29MAR00
1110	ANALYSIS AND FINAL REPORTS	0		04AUG00

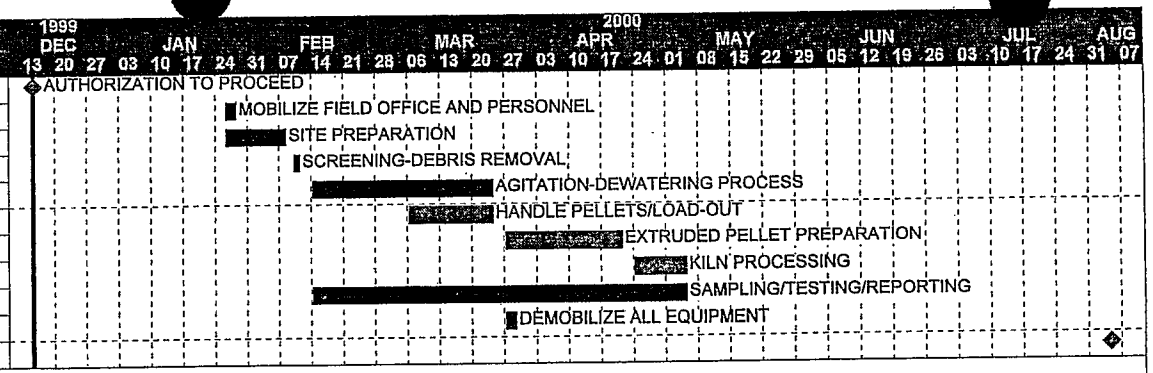

Start date	15DEC99
Finish date	04AUG00
Data date	15DEC99
Run date	30NOV99
Page number	1A

© Primavera Systems, Inc.

NEW JERSEY OFFICE
OF
MARITIME RESOURCES

JCI/Upcycle Associates, LLC

REVISED PILOT PROGRAM

- Early bar
- Progress bar
- Critical bar
- Summary bar
- Start milestone point
- Finish milestone point

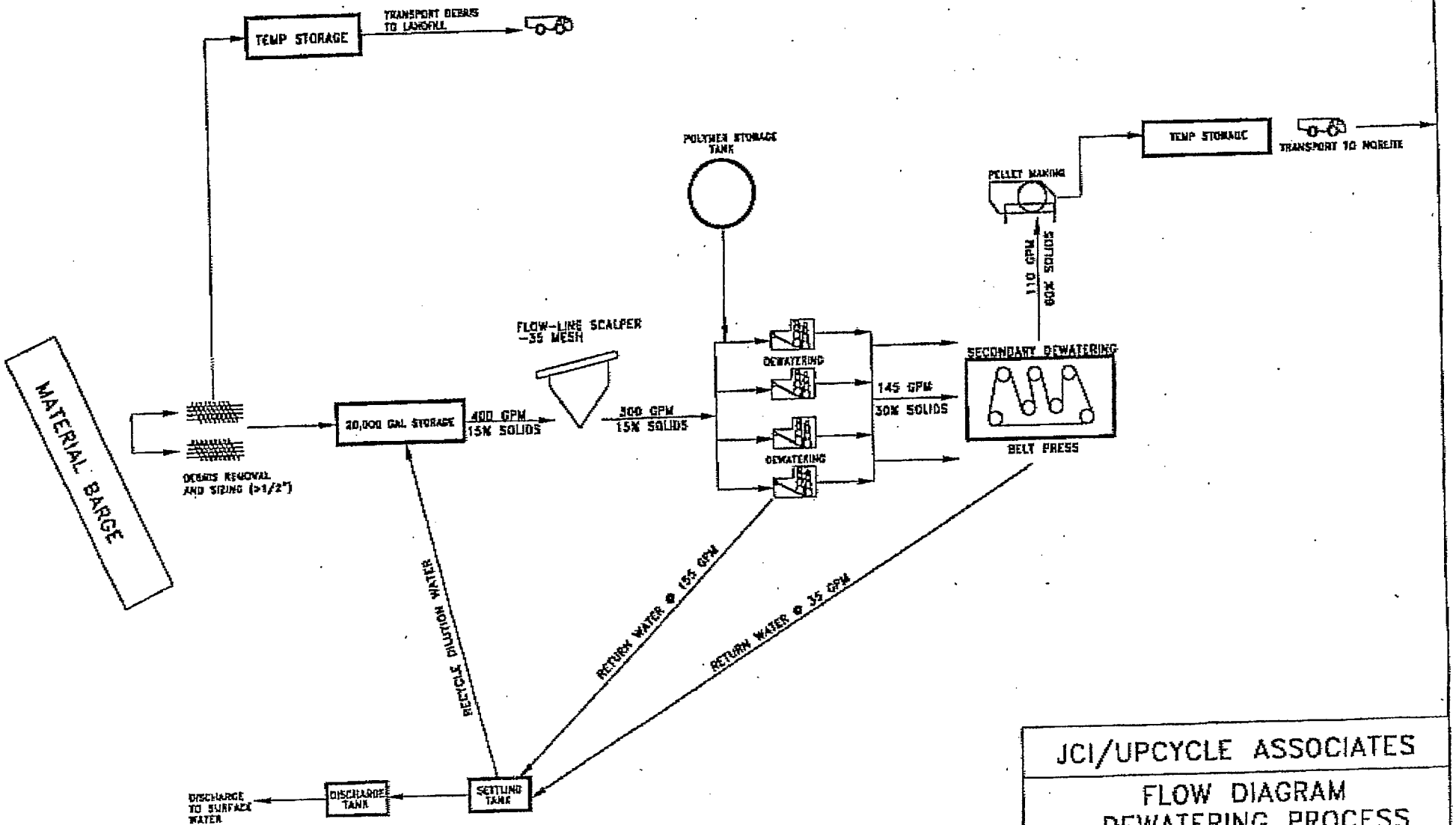

JCI/UPCYCLE ASSOCIATES

FLOW DIAGRAM
DEWATERING PROCESS

SIZE	DRAWN BY:	DWG NO.	REV
A	DWF	002	0
SCALE NTS		SHEET 2 OF 2	

Norlite Process Flow Diagram

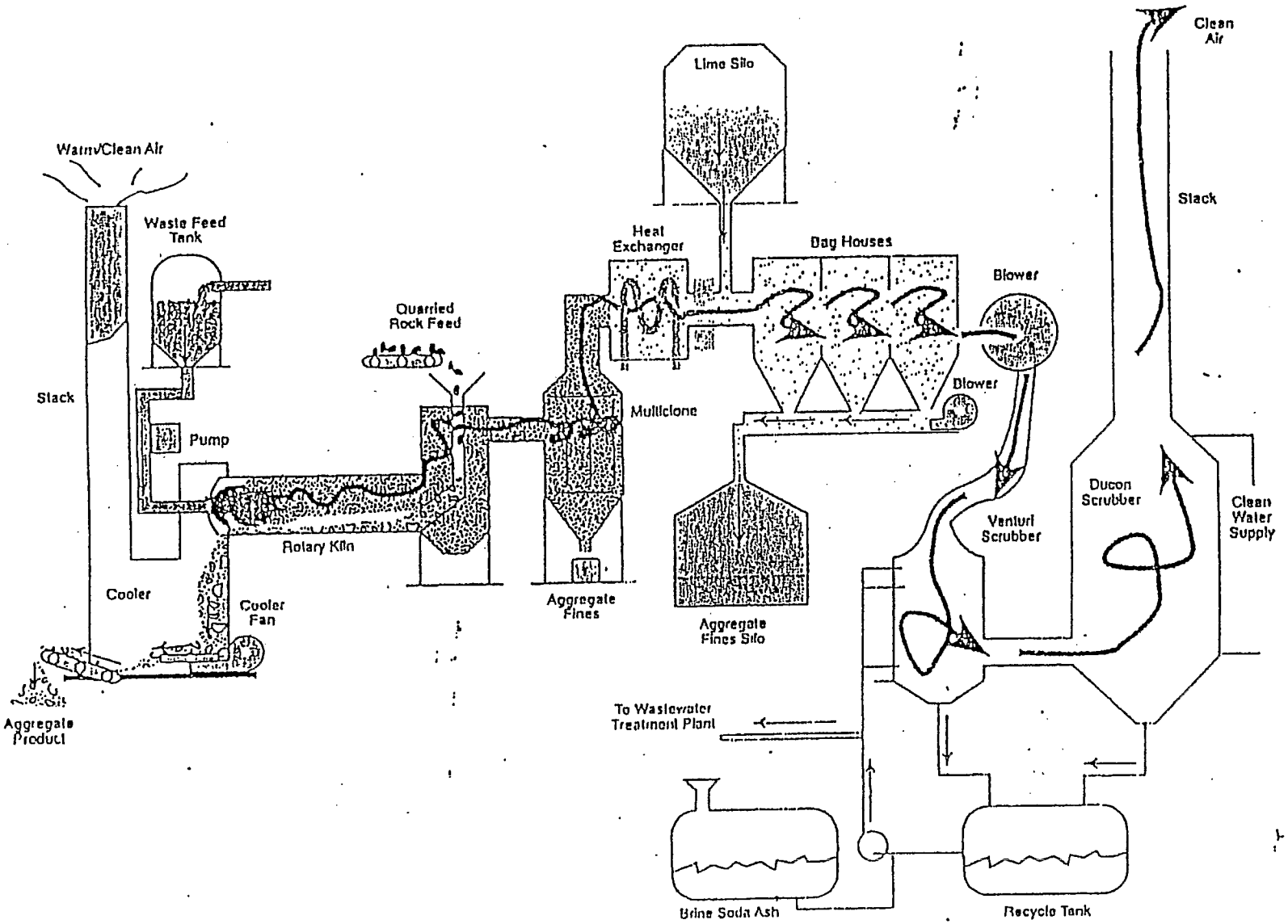

SAMPLING AND ANALYSIS PLAN
SEDIMENT DECONTAMINATION DEMONSTRATION PROJECT
STRATUS PETROLEUM FACILITY
NEWARK, NEW JERSEY

PREPARED FOR:
JCI/Upcycle Associates, LLC
285 Dorchester Avenue
Boston, Massachusetts 02127

PREPARED BY:
GZA GeoEnvironmental, Inc.
65 Willowbrook Blvd.
Wayne, New Jersey 07470

November 3, 1999
File No. 75251.0

Copyright © 1999 GZA GeoEnvironmental, Inc.

Page

1.0 INTRODUCTION 1

2.0 PROJECT DESCRIPTION 1

3.0 MATERIAL SAMPLING AND ANALYSIS 2

3.1 AS-DREDGED MATERIAL 4

3.2 LIQUID FROM THE DEWATERING STEP 4

3.3 PELLETIZED FILTER CAKE 5

3.4 AIR EMISSIONS AND AIR POLLUTION CONTROL SYSTEM RESIDUALS 5

3.5 LIGHTWEIGHT AGGREGATE 5

3.6 EQUIPMENT DECONTAMINATION 6

4.0 SAMPLE CHAIN OF CUSTODY/DOCUMENTATION 6

4.1 FIELD LOGBOOK 6

4.2 SAMPLE NUMBERING SYSTEM 7

4.3 SAMPLE DOCUMENTATION 7

5.0 SAMPLE PACKAGING AND SHIPPING 8

FIGURES

Figure 1 Flow Diagram with Sampling Locations

TABLES

Table 1 Sampling Program Summary
Table 2 Sampling and Analytical Program
Table 3 Geotechnical Testing – Lightweight Aggregate

APPENDICES

Appendix A STL Laboratory Quality Assurance Management Plan
Appendix B STS Accreditation Documentation
Appendix C Laboratory Method Detection Limits

1.0 INTRODUCTION

This document presents the Sampling and Analysis Plan (SAP) for the pilot study associated with the Sediment Decontamination Demonstration Project being performed for the New Jersey Office of Maritime Resources by JCI/Upcycle Associates, LLC.

This SAP describes the procedures to be followed during material sampling and laboratory analysis of the dewatering, pelletizing and aggregate production steps of the decontamination process. The portion of this SAP which addresses the dewatering and pelletizing phases of the process was prepared in accordance with *The Management and Regulation of Dredging and Dredged Material in New Jersey's Tidal Waters; October 1997* and *New Jersey Department of Environmental Protection Field Sampling Procedures Manual; May 1992.*

Air emissions and air pollution control system residuals monitoring, sampling and analysis will be performed under a protocol submitted to, and approved by, the New York State Department of Environmental Conservation. That protocol is incorporated by reference and included in this SAP.

Bulk sediment chemistry analysis of the lightweight aggregate produced at Norlite Corporation during this pilot program will be analyzed in accordance with the New Jersey documents referenced above. The geotechnical laboratory program for the lightweight aggregate product will be conducted in accordance with applicable American Society for Testing and Materials (ASTM) or U.S. Army Corps of Engineers (USACE) procedures.

2.0 PROJECT DESCRIPTION

The pilot study will consist of subjecting 2000 cubic yards (cy) of dredged material to a decontamination process developed by JCI/Upcycle Associates, LLC. In general, the decontamination process consists of dewatering, pelletizing and extrusion of the dredged material coupled with thermal treatment via a rotary kiln. The objective of the decontamination process is to provide material for beneficial use.

The dewatering and pelletizing steps of the pilot study will be performed at the Stratus Petroleum facility in Newark, New Jersey. Figure 1 presents a flow diagram of the dewatering and pelletizing steps of the decontamination process. Proposed sample locations are identified on Figure 1.

Extrusion of the dredged material and processing via a rotary kiln will be accomplished at Norlite Corporation in Cohoes, New York. A process flow diagram and proposed sampling locations for this portion of the pilot study are included in the Air Emissions and Air Pollution Control System Residuals Monitoring Protocol identified above and included by reference herein.

3.0 MATERIAL SAMPLING AND ANALYSIS

A number of materials representing the stages of the decontamination process will be sampled and analyzed during this pilot study. A summary of the approximate number and types of samples to be collected during this pilot study is presented in Table 1. A total of six sample types will be collected and analyzed during this study. They are:

1. As-dredged Material
2. Liquid from the Dewatering Step
3. Pelletized Filter Cake Solid
4. Air Emissions
5. Air Pollution Control System Residuals
6. Lightweight Aggregate

Samples from the dewatering and pelletizing steps of this process (i.e. sample types 1,2, and 3) will be analyzed for the following analytical parameters by Severn Trent Laboratories, Inc. (STL), formerly EA Laboratories, in Sparks, Maryland. STL is certified by both New York and New Jersey (NJ Certification No. 60418; NY Certification No.10692). One sample of each sample type will be archived by STL for one year.

- Grain size and % solids as per ASTM D-422 [solids only]
- Total Organic Carbon (TOC) as per EPA Method 9060
- Volatile Organic Compounds (VOCs) as per EPA Method 8260
- Semi-Volatile Organic Compounds (SVOCs) as per EPA Method 8270
- Pesticides as per EPA Method 8081A
- Herbicides as per EPA Method 8150A [herbicides not required by NJDEP]
- Inorganic Metals as per EPA Method 6010/7470
- Polychlorinated Biphenyls (PCBs) Aroclors and Congeners as per EPA Method 8082
- Polychlorinated Dibenzo-p-Dioxin and Dibenzofurans (PCDD/PCDF) as per EPA Method 1613 Revision B.
- Toxicity Characteristic Leaching Procedure (TCLP) as per EPA Method 1311 [solids only]
- Total Suspended Solids as per EPA Method 160.2 [dewatering liquid only]

Quality Assurance/Quality Control (QA/QC) samples such as duplicates, field/equipment rinsate blanks, trip blanks and matrix spike/matrix spike duplicate (MS/MSD) samples will be analyzed throughout the sampling program. The QA/QC program for the dewatering and pelletizing steps of the process is as follows. MS/MSD samples will be collected and analyzed at a frequency of one with every batch of 1-20 samples per sample type. Field/equipment rinsate blanks will be collected at a frequency of one per sampling procedure. Trip blanks will be collected at a frequency of one per shipment of aqueous samples to the laboratory. Method blanks will be analyzed at a frequency of one with every batch of 1-20 samples or every 12 hours, whichever is less. Surrograte spike recoveries will be performed for

each class of organic compound. Duplicate analyses will be conducted at a frequency of one per sample type.

STL's Quality Assurance Management Plan is provided in Appendix A.

Samples of the media being monitoring during the emissions testing program at Norlite (i.e. sample types 4 and 5) will be submitted to laboratories certified by the New York State Department of Health Environmental Laboratory Accreditation Program (ELAP) for analysis. Parameters and constituents to be monitored and analyzed, as well as QA/QC procedures to be followed, are identified in the previously referenced protocol.

Lightweight aggregate manufactured from the dredged material (i.e. sample type 6) will be analyzed for both bulk chemistry constituents and geotechnical properties. Bulk chemistry analysis will be performed by a New York certified laborotory in accordance with the methods listed above for the pelletized filter cake solid plus Multiple Extraction Procedure (MEP) as per EPA Method 1320 for inorganic metals only. Geotechnical testing will be performed by STS Consultants, Ltd. (STS) The STS laboratory is accredited by the National Voluntary Laboratory Accreditation Program (NVLAP) of the National Institute of Standards and Technology (Certificate No. 100191-0) and USACE.

The geotechnical tests which will be performed on the lightweight aggregate are:

1. Particle size as per ASTM C-117 and ASTM C 136
2. Standard Proctor Compaction Test as per ASTM D 698
3. Minimum Density Test as per ASTM D 4239
4. Maximum Density Test as per ASTM D4238
5. Consolidated Drained Triaxial Test as per USACE EM 1110-2-1906 App. X
6. Direct Sheer Test as per ASTM D 3080

QA/QC procedures and protocols will be performed in accordance with those established within the ASTM and/or USACE methods. STS' NVLAP Accreditation documentation is provided in Appendix B.

A summary of sample preservation methods, holding times, the sampling devices to be used, sample container requirements, and sample volume requirements is presented in Table 2. The method detection limits (MDLs) which will be met for this study are listed in Appendix C.

Mr. Gerard F. McKenna will independently validate the data generated during this pilot study.

GZA personnel will collect all dewatering liquid and pelletized filter cake solid samples. Representatives of the U.S. Environmental Protection Agency (USEPA) and the United States Army Corps of Engineers (USACE) will sample the as-dredged material. USEPA/USACE personnel will provide the as-dredged samples to GZA personnel for compositing and packaging for shipment to the laboratory. Air

emissions, air pollution control system residuals and lightweight aggregate samples from the processing at Norlite will be collected, packaged and sent to the respective laboratories by the air emissions testing contractor, ENSR.

3.1 AS-DREDGED MATERIAL

A clamshell dredge will excavate approximately 2000 cubic yards (cy) of material from Berth 1 at the Stratus Petroleum Facility and place the material into a dredging hopper scow. Nine grab samples will be randomly collected using a 0.4 cy closed clamshell from the USACE vessel *Gelberman.* The samples will be collected by USEPA/USACE personnel. A relative portion from each of the nine grab samples will be placed into a USEPA/USACE supplied 250 gallon HDPE container, and homogenized using a stainless steel Lightnin mixer for twenty minutes in all x-y directions. All mixing operations will take place on the *Gelberman.* Following homogenization, USEPA/USACE personnel will randomly sub-sample the as-dredged material using a teflon coated container attached to a telescoping pole. This material will be placed into a laboratory decontaminated stainless steel bowl provided by GZA sampling personnel for compositing and sample preparation.

With the exception of the VOC portion of each sample, grab samples will be composited at a frequency of three grab samples/composite to yield a total of three samples for analysis. Sample compositing will be performed in the field at Stratus Petroleum using a laboratory decontaminated, stainless steel bowl and spoon or trowel. All composited samples will be analyzed for the parameters listed in Section 3.0. VOC samples will not be composited. One of the three grab samples per composite will be arbitrarily selected for VOC analysis.

3.2 LIQUID FROM THE DEWATERING STEP

The decontamination process includes dewatering via a tracking grid and a mechanical filter press. Water from both dewatering steps will be channeled to one settling tank.

A two-phase sampling and analysis program will be performed on the liquid from the dewatering step. The phases are identified as (1) initial liquid characterization and (2) routine sampling and analysis.

Initial characterization will serve to fully characterize the dewatering liquid. This initial characterization will include all the parameters listed in Table 2. Initial characterization will require the as-dredged material to be dewatered under a "batch" scenario. All water initally generated from the dewatering process will be collected in a nominal 20,000 gallon holding tank. One sample of this water will be collected directly from the holding tank into appropriate sample containers. These containers will be shipped to the laboratory for analysis via expedited turnaround time. Analytical results will be compared with New Jersey Surface Water Quality Standards. Assuming these values are met, the initial batch of dewatering liquid will be discharged to the Passaic River.

As part of the initial dewatering liquid characterization, the retention time needed to meet the Surface Water Quality Standards will be monitored. After holding the initial 20,000 gallons of dewatering liquid for 10 minutes, testing for TSS using the Hach DR850 meter will be started. Testing will continue at 10 minute intervals until the TSS level of 30 milligrams per liter (mg/L) is obtained. The time period needed to achieve the 30 mg/L level will constitute the retention time to be used during the subsequent routine sampling and analysis phase. All values obtained to determine the retention time will be recorded.

Once the initial characterization is complete, the routine sampling and analysis program will be administered. Under the routine sampling and analysis program, the dewatering liquid will be collected in the nominal 20,000 gallon holding tank. This tank provides the recirculation water for the process as well as surge capacity. An overflow stream from the 20,000 gallon tank will flow to a second tank, the discharge tank. The discharge tank is estimated to be 5,000 gallons with sufficient freeboard capacity. The discharge tank will allow the overflow water to become quiescent. It is estimated that the time to achieve quiescence is in the range of 10 to 20 minutes. A sample will be drawn from the discharge tank and will be analyzed in the field for Total Suspended Solids (TSS) only, using a Hach DR850 portable meter. TSS will be used as a surrogate parameter to indicate that water quality is being met for surface water discharge. If the TSS value of the sample is less than the designated action limit of 30 mg/L, the liquid will be discharged directly to the Passaic River. If the action limit is exceeded, additional settling time will be provided and the liquid will be resampled for TSS.

3.3 PELLETIZED FILTER CAKE SOLID

It is estimated that approximately 1500 tons of pelletized filter cake solid will be generated during this pilot study. One grab sample will be collected for every 500 tons of pelletized filter cake solid generated. Grab samples will be collected utilizing a laboratory decontaminated, stainless steel scoop or trowel. All pelletized filter cake solid samples will be analyzed for the parameters listed in Section 3.0.

3.4 AIR EMISSIONS AND AIR POLLUTION CONTROL SYSTEM RESIDUALS

A stack testing and material testing program is planned during the production operations at Norlite Corporation. Specifics on this program are provided in the protocol included by reference herein.

3.5 LIGHTWEIGHT AGGREGATE

It is estimated that approximately 2000 tons of lightweight aggregate will be produced at Norlite during this pilot program. Sampling and analysis of the lightweight aggregate will be perfomed in accordance with the protocol identified in Section 1.0.

The lightweight aggregate produced at Norlite will be tested for the prescribed bulk sediment chemistry parameters and the geotechnical properties identified in Section 3.0 and Table 3. A total of 350 pounds (i.e. 7.5 cubic feet) of aggregate will be required for the geotechnical testing portion of this study.

3.6 EQUIPMENT DECONTAMINATION

All equipment involved in GZA field sampling (i.e. sample types 1, 2, and 3) will be decontaminated as follows.

Sampling equipment, such as trowels, scoops, bowls, spatulas, and spoons will be decontaminated in a laboratory according to the following procedure:

1. Phosphate-free detergent [(1)] and potable water wash;
2. Potable water rinse;
3. Ten Percent (10%) nitric acid [(2)] rinse, if sampling for metals (use one percent (1%) for equipment other than stainless steel);
4. Deionized water rinse;
5. Solvent [(3)] rinse {2 times};
6. Air dry.

NOTES:
(1) = Liquinox or Alconox
(2) = Reagent-grade acid and deionized water
(3) = Pesticide-grade only (e.g. isopropanol, acetone, methanol)

Extraneous contamination will be minimized by wrapping sampling equipment in aluminum foil when not in use, and changing the sampler's gloves prior to collection of each individual sample.

4.0 SAMPLE CHAIN OF CUSTODY/DOCUMENTATION

4.1 FIELD LOGBOOK

GZA sampling personnel are required to keep a field logbook. This field logbook will be a bound weatherproof logbook that shall be filled out at the location of sample collection immediately after sampling. It will contain sample particulars including sample number, sample collection time, sample location, sample descriptions, sampling methods used, field measurements, name of sampler, and other site-specific observations. The field logbook will contain any deviations from protocol, visitor's names during sampling, and other site-specific information the Field Sampler warrants as noteworthy.

Any corrections made in the field logbook will be made with a single strike through the information requiring correction. Each correction will be initialed and dated.

4.2 SAMPLE NUMBERING SYSTEM

Each sample collected and/or handled by GZA personnel will be designated by a unique alphanumeric code which will identify the sample type and number.

The sample type will be a two-letter identifier i.e., AD for as-dredged material, DL for dewatering liquid, PC for pelletized filter cake, FB for field/equipment rinsate blank and TB for trip blank. The sample type identifier will be followed by a hyphen and then a number indicating sample number. Sample numbers will be given sequentially to each sample type as they are collected.

The following is a general guide for sample identification:

AA-NN
Sample - Sample
Type Number

Where A = alpha and N = numeric

For Example: DL-01 identifies the first sample of dewatering liquid collected during the pilot study. DL-02 identifies the second sample of dewatering liquid collected during this pilot study.

Duplicate samples will be given a sequential number so as to be unidentifiable as a duplicate by laboratory personnel.

4.3 SAMPLE DOCUMENTATION

The following sample documentation information applies to samples being collected and/or handled by GZA personnel (i.e. samples from the dewatering and pelletizing steps.

4.3.1 Sample Labels

A sample label will be affixed to each sample jar. Each label will indicate the sample number, as described in Section 4.2 above, the time and date of sample collection, and the analysis to be performed. Blank and duplicate samples will be labeled in the same manner as other samples.

4.3.2 Chain of Custody Records

Chain of custody (C-O-C) procedures provide documentation of the handling of each sample from the time it is collected until it reaches the laboratory. C-O-C procedures create a record of sample collection, transfer of samples between personnel, sample shipping and receipt of samples at the laboratory.

The C-O-C record remains with the sample at all times and bears the name of the person assuming the responsibility for the samples. When transferring samples, the individuals relinquishing and receiving the samples should sign, date and note the time of transfer on the C-O-C record.

4.3.3 Chain of Custody Seals

The C-O-C seal is an adhesive seal placed in areas such that if the sealed container is opened, the seal is broken. The C-O-C seal ensures that no sample tampering occurs between sample collection and receipt at the laboratory. C-O-C seals are signed and dated by the individual sealing the container. C-O-C seals will be placed on coolers used to ship samples via an overnight courier. Clear tape or strapping tape will be placed over each C-O-C seal.

5.0 SAMPLE PACKAGING AND SHIPPING

Samples collected during the dewatering and pelletizing steps of the process will be packaged and shipped as follows.

A picnic cooler will be used for sample shipment. If present, the drain plug will be taped shut. Samples will be placed in the cooler in such a way as not to touch. The samples will be surrounded by inert packing material such as bubble wrap, foam, or vermiculite. Ice-packs, or plastic bags filled with ice (double-bagged) will be placed in the coolers so as to maintain a temperature of 4°C.

The C-O-C record will be placed in a sealed plastic bag and taped to the inside top of the cooler lid. The C-O-C will note the name of the overnight carrier and airbill number. Each cooler will be taped shut with strapping tape. At least two custody seals will be placed on each cooler. All samples will be shipped on the day of sample collection.

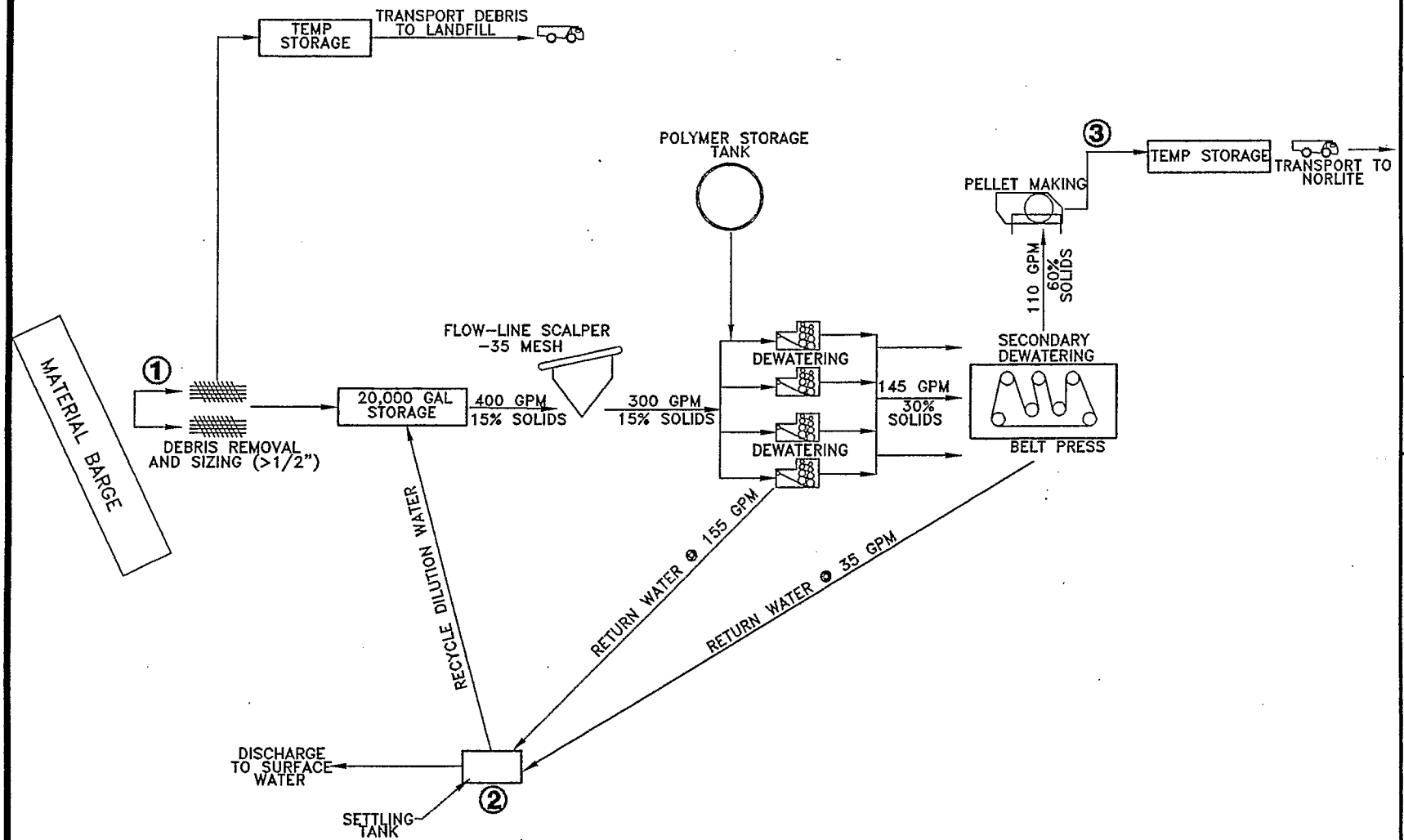

LEGEND

1. SAMPLING LOCATION: AS-DREDGED MATERIAL
2. SAMPLING LOCATION: DEWATERING LIQUID
3. SAMPLING LOCATION: PELLETIZED FILTER CAKE

NOT TO SCALE

REV. NO.	DESCRIPTION	BY	DATE

PROJECT MGR: M.S. DRAWN BY: B.F
DESIGNED BY: E.M.
REVIEWED BY: T.E. DATE: 7/28/99

GZA GeoEnvironmental, Inc.

Source: JCI/Upcycle Associates, LLC

Sediment Decontamination Demonstration Project
Stratus Petroleum Facility

Flow Diagram Dewatering/ Pelletizing Process

PROJECT NO. 75251.00

FIGURE NO. 1

August 02, 1999 ... Drawing:75251001.d...

TABLE 1

JCI/UPCYCLE PILOT STUDY
SAMPLING PROGRAM SUMMARY

SAMPLE TYPE	As-Dredged Material	Dewatering Liquid	Pelletized Filter Cake
Environmental Samples(1)	3	1	3
Duplicates(2)	1	1	1
Field/Equipment Rinsate Blanks(3)	1	0	1
Trip Blanks(4)	0	1	0
MS/MSD(5)	1	1	1
Total Number of Samples	6	4	6

Notes:

(1) Samples collected as follows:

as-dredged material - 9 grabs/2000cy;3 grabs/composite
dewatering liquid - 1 grab/1st 20,000 gals (all parameters)
subsequent samples 1grab/20,000 gals (TSS only)
pelletized filter cake - 1 grab/500 tons; no compositing

(2) Duplicates collected at a frequency of one per sample type
(3) Field/equipment rinsate blanks collected at a frequency of 1 per sampling proc
(4) Trip Blanks collected at a frequency of one per shipment to the laboratory of a
(5) MS/MSDs collected at a frequency of 1 per 20 samples per sample type

TABLE 2

JCI/UPC[illegible]LOT STUDY
SAMPLING AND [illegible]LYTICAL PROGRAM

SAMPLE TYPE	MATRIX	SAMPLING DEVICE	LABORATORY ANALYSIS	SAMPLE CONTAINER[4]	SAMPLE PRESERVATION	HOLDING TIME
as-dredged material	solid	*sampled by USACE	grain size/% solids	3- 4oz. Glass jars	4°C	none
			TOC		4°C	28 days
			SVOCS		4°C	14 days ext/ 40 days
			Pesticides/Herbicides		4°C	14 days ext/ 40 days
			Inorganic Metals		4°C	6 months/Hg 28 days
			PCBs		4°C	14 days ext/ 40 days
			VOCs	1-4 oz. Glass jar	4°C	14 days
			PCDD/PCDF	1-4oz. Glass jar	4°C	30 days
dewatering liquid	aqueous	None - directly into sampling containers	TOC[2]	500 ml glass jar	H_2SO_4	28 days
			VOCs[2]	3-40ml VOA	HCl	14 days
			SVOCS[2]	2-1L amber glass	4°C	7 days ext/40 days
			Pesticides/Herbicides[2]	3-1L amber glass	4°C	7 days ext/40 days
			Inorganic Metals[2]	1-1L plastic	HNO_3	6 months/Hg 28 days
			PCBs[2]	2-1L amber glass	4°C	7 days ext/40 days
			PCDD/PCDF[2]	2-1L amber glass	4°C	14 days
			Total Suspended Solids[3]	1-1L plastic	4°C	7 days
pelletized filter cake solid	solid	stainless steel scoop/trowel	grain size/% solids	3- 4oz. Glass jars	4°C	none
			TOC		4°C	28 days
			SVOCS		4°C	14 days ext/ 40 days
			Pesticides/Herbicides		4°C	14 days ext/ 40 days
			Inorganic Metals		4°C	6 months/Hg 28 days
			PCBs		4°C	14 days ext/ 40 days
			VOCs	1-4 oz. Glass jar	4°C	14 days
			PCDD/PCDF	1-4oz. Glass jar	4°C	30 days
			TCLP	3-4oz. Glass jars	4°C	(1)
air emissions	(5)	(5)	(5)	(5)	(5)	(5)
air pollution control system residuals	(5)	(5)	(5)	(5)	(5)	(5)
lightweight aggregate	solid	(5)	TOC	3-4oz. Glass jars	4°C	28 days
			SVOCS		4°C	14 days ext/ 40 days
			Pesticides/Herbicides		4°C	14 days ext/ 40 days
			Inorganic Metals		4°C	6 months/Hg 28 days
			PCBs		4°C	14 days ext/ 40 days
			VOCs	1-4oz. Glass jar	4°C	14 days
			PCDD/PCDF	1-4oz. Glass jar	4°C	30 days
			TCLP	3-4oz. Glass jars	4°C	(1)
			MEP	2-4oz. Glass jars	4°C	none specified
			geotechnical tests	see Table 3		

Notes:
Grain size/% solids by method ASTM D-422
TOC by EPA Method 9060
VOCs by EPA Method 8260
SVOCs by EPA Method 8270C
Pesticides by EPA Method 8081A
Herbicides by EPA Method 8150A
Inorganic Metals by EPA Mehtods 6010/7470
PCBs by EPA Method 8082
PCDD/PCDF by EPA Method 8290
TCLP by EPA Method 1311
MEP by EPA Method 1320 - leachate to be analyzed for Inorganic Metals only
TSS by EPA Method 160.2

(1) Organics: 14 days for leaching;7 days for leachate extraction; 40 days for extraction analysis
Inorganics: 14 days for leaching; 14 days for extraction; 6 months/Hg 28 days for extraction analysis
(2) analysis run on 1st sample collected only
(3) analysis run on all samples collected
(4) all containers provided by the laboratory
(5) see referenced protocol

JCI/UPCYCLE PILOT STUDY
GEOTECHNICAL TESTING - LIGHTWEIGHT AGGREGATE

SAMPLE TYPE	MATRIX	NUMBER OF SAMPLES	LABORATORY ANALYSIS
lightweight aggregate	solid	22	Particle Size - ASTM C117; ASTM C136
		1 Standard Proctor Compaction	Moisture Density Relationship of Soils - ASTM D698
		1	Minimum Index Density of Soils - ASTM D 4254
		1	Maximum Density of Soils - ASTM D4253
		8 Consolidated Stresses	Consolidated Drained Triaxial Test - USACE EM1110-2-1906; App. X
		8 Normal Stresses	Direct Shear Test - ASTM D 3080

Notes:

No sample preservation required.
No required holding times.
Except for particle size, all testing will be preceded by soaking the aggregate in water for a minimum period of 48 hours.

CHRISTINE TODD WHITMAN
GOVERNOR

JAMES WEINSTEIN
COMMISSIONER

STATE OF NEW JERSEY
DEPARTMENT OF TRANSPORTATION
1035 PARKWAY AVENUE
P.O. BOX 601
TRENTON, N.J. 08625-0601
609-530-3536

PLEASE REPLY TO:
NJ MARITIME RESOURCES
PO BOX 837
TRENTON, NEW JERSEY 08625-0837
TELEPHONE: (609)984-6694
FACSIMILE: (609)984-1468

January 6, 2000

Mr. Jay Derman, P. E.
Upcycle Associates, LLC
P.O. Box 11389
Loundonville, NY 12211

Dear Mr. Derman:

Through legislation, Governor Whitman created the Dredging Project Facilitation Task Force (DPFTF), an independent body in the Executive Branch, to review agency recommendations for NJ Dredging Projects. The DPFTF, in their review of the proposals submitted for the Sediment Decontamination Technology Program, selected five vendors to participate (WEB Consortium, IGT/Endesco, NUI, Upcycle Associates, and BEM Systems). Selected vendors were required to prove the efficacy of their decontamination technology on NY/NJ Harbor sediments through pilot projects. NJ Maritime Resources (NJMR) and the NJ Department of Environmental Protection (NJDEP) would review pilot project reports to determine whether further investigation would be in the State's interest. Following successful completion of pilot projects, work plans for demonstration level projects would be reviewed.

The December 2, 1999 Upcycle Associates Pilot Phase work plan as modified on December 20, 1999 has been accepted by NJMR and the Site Remediation Program of NJDEP. Permit requirements from the NJDEP Air Program may necessitate further modifications to the scope of work. To date, despite repeated attempts, NYDEC has not contacted this office to discuss the project and we remain concerned regarding the status of the DEC permit. Please note that all permits from NJDEP and NYDEC must be issued before processing of dredged material can commence. Contract negotiations will begin once NJDEP Air Program issues, if any, are resolved.

We appreciate your patience with the process, and continue to look forward to working with you in the future. As always, all correspondence regarding the Decontamination Technology Program should come through this office.

Sincerely,

Michael D. Riley
Deputy Director, NJ Maritime Resources

cc: Andrew Sinclair
Larry Baier

JCI/UPCYCLE Associates, LLC
P.O. BOX 11389
LOUDONVILLE, NY 12211-0389
Phone: (518) 463-0905 Fax: (518) 463-1008

December 15, 1999

Mr. W. Scott Douglas
Maritime Specialist
NJ Maritime Resources
P. O. Box 837
Trenton, NJ 08625-0837

Re: Sediment Decontamination Pilot Project
Environmental Work Plan dated November 3, 1999

Dear Mr. Douglas:

In response to your letter dated December 8, 1999, referencing the Sampling and Analysis Plan for the Sediment Decontamination Demonstration Project to be conducted at the Stratus Petroleum Facility in Newark, NJ, please accept this letter addendum as clarification to Section 3.2, Liquid from the Dewatering Step. This clarification is in accordance with the request of the NJDEP and NJMR.

Specifically, the same initial batch of dewatering liquid will be monitored for pollutants and for suspended solids. The batch will be monitored for TSS periodically during settling until the 30 mg/L TSS target is reached. At that time, the sample for pollutants will be taken according to appropriate protocols and shipped for expedited analysis. While waiting for results, the batch shall be allowed to settle for an additional 24 hours, after which TSS will be measured again and a second sample taken. This second sample shall be stored under refrigeration at 4 degrees C until the results from the first sample are received. If the results of the first sample meet surface water quality standards, then the batch will be discharged to the dredging site and the second sample will be discarded. Subsequent batches of dewatering liquid will be held until the 30 mg/L TSS level is met. If surface water quality standards are not met, the second sample shall undergo expedited analysis. When the results of the second sample are received, and the results indicate compliance with surface water quality standards, then the batch can be discharged at the dredging site. If surface water quality standards have not been met at this time, JCI/UPCYCLE Associates will call NJDEP for guidance.

Further, in accordance with the request from NJDEP, Section 3.2 is modified to reflect that all discharges will be monitored for discharge rate using a flow meter.

I trust the above clarification and modification fully address the comments contained in your December 8, 1999, letter. Impacts of the above changes to the project budget contained in our December 2, 1999, Work Plan submittal will be forthcoming.

Thank you for your assistance in finalizing and approving the Sampling and Analysis Plan.

Sincerely yours,
JCI/UPCYCLE Associates, LLC

Jay D. Derman, P.E.

cc: L. Baier – NJDEP
R. Dewan - NJDEP
M. Sayres – GZA GeoEnvironmental
H. Schlieper – JCI/UPCYCLE

CHRISTINE TODD WHITMAN
GOVERNOR

JAMES WEINSTEIN
COMMISSIONER

STATE OF NEW JERSEY
DEPARTMENT OF TRANSPORTATION
1035 PARKWAY AVENUE
P.O. BOX 601
TRENTON, N.J. 08625-0601
609-530-3536

PLEASE REPLY TO:
NJ MARITIME RESOURCES
PO BOX 837
TRENTON, NEW JERSEY 08625-0837
TELEPHONE: (609)984-6694
FACSIMILE: (609)984-1468

December 8, 1999

Mr. Jay Derman
JCI/Upcycle Associates, LLC
P.O. Box 11389
Loundonville, NY 12211

Re: Environmental Work Plan dated Nov. 3, 1999

Dear Mr. Derman:

The Office of NJ Maritime Resources and the Office of Dredging and Sediment Technology have completed their review of the Sampling and Analysis Plan for the Sediment Decontamination Demonstration Project Stratus Petroleum Facility Newark, NJ dated November 3, 1999.

After careful review we feel that this approach will adequately characterize the success of the Upcycle process to decontaminate dredged materials from the Stratus facility. One minor clarification is required. In section 3.2, the plan for monitoring the liquid from the dewatering step is presented. The text here is not clear as to the order of actions to be taken. To clarify, the NJDEP requests that the same initial batch of liquid be monitored for pollutants and monitored for suspended solids.. Specifically the batch should be monitored for TSS periodically during settling until the 30 mg/L target TSS is reached. At this time, the sample for pollutants is to be taken according to appropriate protocols and shipped for expedited analysis. While waiting for results, the batch should be allowed to settle for an additional 24 hours, after which TSS is to be measured again and a second sample taken. This second sample should be stored under refrigeration at 4 degrees C until the results from the first sample are received. If the results of the first sample indicate that surface water quality standards are met, then the batch can be discharged to the dredging site. The second sample could be discarded. Subsequent batches would be held until 30 mg/L TSS is met. If surface water quality standards are not met, the second sample should be shipped for expedited analysis. When these results are received, and the results indicate compliance with surface water quality standards, then the batch can be discharged at the dredging site. Subsequent batches would be held until the TSS level measured at the time of the second sampling was met. If surface water quality standards are still not met, JCI/Upcycle Associates must call NJDEP for guidance.

In order to provide information for a potential permanent JCI/Upcycle Associates facility, the NJDEP also requests that all discharges be monitored for rate of discharge using a commercially available flow meter. This information would be useful in determining specific language for a NJPDES permit.

These two clarifications can be made by letter addendum to the previously supplied work plan. We understand that the aforementioned clarification may impact the project budget. Please make any necessary changes to the December 2 workplan and forward them to this office so that we may adjust our budget accordingly. Thank you in advance for your cooperation.

Sincerely,

W. Scott Douglas

W. Scott Douglas
Maritime Specialist, NJ Maritime Resources

cc: Richard Dewan, NJDEP
Larry Baier, NJDEP
Hank Schleiper, JCI/Upcycle Associates
Mike Riley, NJMR

MATERIAL SAMPLING AND ANALYSIS REPORT SEDIMENT DECONTAMINATION DEMONSTRATION PROJECT STRATUS PETROLEUM FACILITY NEWARK, NEW JERSEY

PREPARED FOR:
JCI/Upcycle Associates, LLC
285 Dorchester Avenue
Boston, Massachusetts 02127

PREPARED BY:
GZA GeoEnvironmental, Inc.
65 Willowbrook Blvd.
Wayne, New Jersey 07470

October 2000
File No. 75251.10

Copyright © 2000 GZA GeoEnvironmental, Inc.

1.0 INTRODUCTION 1

2.0 PROJECT OVERVIEW 1

3.0 MATERIAL SAMPLING AND ANALYSIS 1

3.1 AS-DREDGED MATERIAL 2

3.2 LIQUID FROM THE DEWATERING STEP 3

3.3 TOXICITY TESTING OF DEWATERING LIQUID 4

3.4 FILTER CAKE SOLID 4

4.0 DEWATERING LIQUID ANALYTICAL RESULTS 5

TABLES

TABLE 1 Dewatering Liquid Analytical Results
TABLE 2 Dewatering Liquid – Field Measurements for Toxicity Testing

APPENDICES

APPENDIX A Explanatory Letter from Laboratory Regarding Methanol Preservation

1.0 INTRODUCTION

In May 2000, GZA GeoEnvironmental, Inc. (GZA) was retained by JCI/Upcycle Associates, LLC (JCI) to perform material sampling and analysis during JCI's pilot study associated with the Sediment Decontamination Demonstration Project for the New Jersey Office of Maritime Resources.

This document describes the procedures that were followed during material sampling and laboratory analysis of as-dredged material, dewatering liquid and filter cake solids generated at the Stratus Petroleum Facility in Newark, New Jersey. This document also provides analytical results of the dewatering liquid and compares those results to the Surface Water Quality Criteria (SWQC) for SE-3 designated waters. All other analytical results were provided to JCI under separate cover.

2.0 PROJECT OVERVIEW

The pilot study consisted of subjecting 2000 cubic yards (cy) of dredged material to a decontamination process developed by JCI. In general, the decontamination process consists of dewatering and extrusion of the dredged material coupled with thermal treatment via a rotary kiln. The objective of the decontamination process is to provide material for beneficial use.

The dewatering step of the pilot study was performed at the Stratus Petroleum facility in Newark, New Jersey (Stratus). Extrusion of the dredged material and processing via a rotary kiln will be accomplished at Norlite Corporation in Cohoes, New York. This document covers only those materials collected and generated at Stratus.

3.0 MATERIAL SAMPLING AND ANALYSIS

A number of materials representing the stages of the decontamination process at Stratus were sampled and analyzed during this pilot study. A total of three sample types were collected and analyzed by GZA. They are:

1. As-dredged Material
2. Liquid from the Dewatering Step
3. Filter Cake Solid

Samples of these three types of materials were analyzed for the following analytical parameters:

- Grain size and % solids as per ASTM D-422 [solids only]
- Total Organic Carbon (TOC) as per EPA Method 9060
- Volatile Organic Compounds (VOCs) as per EPA Method 8260

- Semi-Volatile Organic Compounds (SVOCs) as per EPA Method 8270
- Pesticides as per EPA Method 8081A
- Herbicides as per EPA Method 8150A [herbicides not required by NJDEP]
- Inorganic Metals as per EPA Method 6010/7470
- Polychlorinated Biphenyls (PCBs) Aroclors and Congeners as per EPA Method 8082
- Polychlorinated Dibenzo-p-Dioxin and Dibenzofurans (PCDD/PCDF) as per EPA Method 1613 Revision B.
- Toxicity Characteristic Leaching Procedure (TCLP) as per EPA Method 1311 [solids only]
- Total Suspended Solids as per EPA Method 160.2 [dewatering liquid only]
- Toxicity Testing [dewatering liquid only]

Quality Assurance/Quality Control (QA/QC) samples such as duplicates, field/equipment rinsate blanks, trip blanks and matrix spike/matrix spike duplicate (MS/MSD) samples were collected and analyzed throughout the sampling program. One sample of each sample type was archived by the laboratory for one year.

All analyses, except the toxicity testing, were performed by Severn Trent Laboratories, Inc. (STL) in Pittsburgh, Pennsylvania. STL is certified by both New York and New Jersey (NJ Certification No. 60418; NY Certification No.10692). Dioxin analyses were performed by STL in West Sacramento, California. STL subcontracted out the geotechnical analyses to Geotechnics of Pittsburgh, Pennsylvania.

Aqua Survey, Inc. of Flemington, New Jersey performed toxicity testing.

GZA personnel collected all dewatering liquid and filter cake solid samples. Representatives of the U.S. Environmental Protection Agency (USEPA) and the United States Army Corps of Engineers (USACE) sampled the as-dredged material. USEPA/USACE personnel provided the as-dredged samples to GZA personnel for compositing and packaging for shipment to the laboratory.

3.1 AS-DREDGED MATERIAL

GZA performed as-dredged material sampling on July 12, 2000. USEPA/USACE personnel used a 0.4cy clamshell from the USACE vessel *Hayward* to randomly collect grab samples of as dredged material from a dredging hopper scow anchored at the Stratus Petroleum Facility. The grab samples were placed into a USEPA/USACE supplied 250 gallon HDPE container, and homogenized using a stainless steel Lightnin mixer for twenty minutes in all x-y directions. All mixing operations took place on the *Hayward*.

Following homogenization, USEPA/USACE personnel randomly sub-sampled the as-dredged material and placed this material into nine laboratory decontaminated, stainless steel bowls provided by GZA sampling personnel for compositing and sample preparation. GZA's Sampling and Analysis Plan specified that as-dredged

material compositing would be performed at a frequency of three grab samples per composite and that one of the three grab samples per composite would be arbitrarily selected for VOC analysis.

VOC samples were not composited. The portion of the material that was submitted for VOC analysis was collected as a grab sample. GZA collected all VOC samples using the NJDEP methanol preservation procedure. However, ultimately the VOC analysis was performed on soils not preserved with methanol in order to maintain appropriate method detection limits (see Appendix A for explanatory letter from laboratory).

The remainder of the grab samples were composited by GZA personnel at a frequency of three grab samples/composite to yield a total of three samples for analysis. As-dredged material samples are identified as AD-01, AD-02, AD-02 (archive), AD-03 and AD-04. AD-04 is a duplicate of sample AD-03.

Sample compositing was performed by GZA in the field at Stratus using laboratory decontaminated, stainless steel bowls and trowels. The material in each bowl was homogenized and transferred to clean, laboratory supplied sample containers using a laboratory decontaminated, stainless steel trowel. Separate sampling equipment was used for each sample.

A field blank/equipment rinsate blank (FB-01) was collected during the as-dredged material sampling to confirm that the field equipment and sampling environment did not contaminate the samples. Field blank water was poured over the laboratory decontaminated equipment and into sample containers on Site. A trip blank (TB-01) was included in the cooler containing the VOC samples during transport to confirm that the samples had not been exposed to targeted compounds while in transport.

The samples were placed in ice-packed coolers and shipped via Federal Express to STL under proper chain of custody (C-O-C) procedures. C-O-C seals were placed on the coolers. Any material remaining in the bowls following sample preparation was returned to the dredging hopper scow at Stratus.

Analytical results for the as-dredged material samples were provided to JCI under separate cover.

3.2 LIQUID FROM THE DEWATERING STEP

On August 30, 2000, GZA collected dewatering liquid samples from the discharge tank at Stratus via a spout located on the side of the tank. Clean, laboratory supplied sample containers were held directly under the spout during sample collection. No field sampling equipment was used for sample collection. Samples analyzed for VOC analysis were collected first. A clean bucket was placed under the sample collection area to collect any water lost during sample collection. The water in the bucket was returned to the holding tank after sample collection.

GZA personnel collected a total of three dewatering liquid samples for laboratory analysis. They are identified as DL-01, DL-02 (duplicate of DL-01), and DL-03 (for archiving). JCI personnel collected a fourth sample (DL-04) on August 31, 2000, 24 hours after the initial samples were collected.

Samples were placed in ice-packed coolers and shipped via Federal Express to STL under proper C-O-C procedures. C-O-C seals were placed on the coolers. A trip blank (TB) was included in the cooler during transport to confirm that the samples had not been exposed to targeted compounds while in transport.

Analytical results for the dewatering liquid samples are presented in Table 1, and discussed in Section 4.0.

3.3 TOXICITY TESTING OF DEWATERING LIQUID

On September 1, 2000, GZA collected a sample of dewatering liquid for toxicity analysis. Prior to sample collection and as required by the toxicity testing laboratory, water quality parameters (i.e. dissolved oxygen, pH, temperature, etc.) were measured with a portable Horiba U-23 water quality instrument. These field measurements are presented in Table 2.

Clean, laboratory supplied sample containers were held directly under the spout for sample collection. No field sampling equipment was used for sample collection. The sample was placed in an ice-packed cooler and shipped via Federal Express to Aqua Survey, Inc. for analysis under proper C-O-C procedures. Toxicity testing results were provided to JCI under separate cover.

3.4 FILTER CAKE SOLID

Approximately 500 tons of filter cake solid were generated during the pilot study. Due to a field change in the processing procedure, the filter cake was not pelletized. GZA's Sampling and Analysis Plan (SAP) specified one grab sample to be collected per 500 tons of filter cake solid generated. Therefore, in accordance with the SAP, GZA collected one grab sample plus one duplicate sample of filter cake material (FC-01 and FC-02) on August 30, 2000.

The filter cake material was sampled from 55-gallon drums utilizing a laboratory decontaminated, stainless steel trowel. Samples for VOC analysis were collected as discrete samples. The remainder of the filter cake material was homogenized for additional analytical parameters. Homogenization was performed in a laboratory decontaminated stainless steel bowl with a trowel and then transferred to clean, laboratory supplied sample containers. Separate sampling equipment was used for each sample.

A field blank/equipment rinsate blank (FB) was collected during filter cake sampling

to confirm that the field equipment and sampling environment did not contaminate the samples. Field blank water was poured over the laboratory decontaminated equipment and into sample containers on Site. A trip blank (TB) was included in the cooler containing the VOC samples during transport to confirm that the samples had not been exposed to targeted compounds while in transport.

The samples were placed in ice-packed coolers and shipped via Federal Express to STL for analysis under proper C-O-C procedures. C-O-C seals were placed on the coolers. The analytical results of the filter cake materials were provided to JCI under separate cover.

4.0 DEWATERING LIQUID ANALYTICAL RESULTS

Table 1 summarizes the dewatering liquid analytical results and compares them to the New Jersey Surface Water Quality Standards (SWQS) for Class SE-3 waters. The SE-3 (saline waters in estuaries) classification for the Newark Bay was confirmed by Gigi Mallepalle of NJDEP Division of Surface Water Quality. Table 1 reports only those compounds which were detected in the samples. The complete laboratory data package was provided to JCI under separate cover.

The dewatering liquid samples collected by GZA and JCI contained pesticides and inorganic metals at concentrations above the applicable SWQS. Specifically, the pesticide dieldrin was detected above the SWQS in the sample collected after the 24 hour waiting period (DL-04). The pesticide 4-4'-DDE was detected above the SWQS in all three dewatering liquid samples.

Three metals were detected in the samples above the SWQS. They are arsenic, manganese and mercury. These metals were detected in both the August 30th samples and the August 31st sample.

Table 1 also identifies a number of other compounds detected in the dewatering liquid samples which do not have SWQS.

TABLES

Table 1
Dewatering Liquid Analytical Results
JCI/Upcycle

Sample ID Lab Sample ID. Sampling Date Dilution Factor	EPA Method	New Jersey SWQS	DL-01 COI010216-001 8/30/00 1		DL-02* (DUP) COI010216-002 8/30/00 1		DL-04 COI020124-001 8/31/00 1		TB COI010216-004 1	
Total Organic Carbon (mg/L)	9060	NS	8.8		8.6		6.5		NA	
Total Suspended Solids (mg/L)	160.2	None	146		143		242		ND	
Volatile Organic Compounds (ug/L)	8260									
Acetone		NS	7.1	J	7.1	J	9.6	J	4.6	J
Bromodichloromethane		22	1.5	J	1.5	J	1.6	J	5.0	U
2-Butanone		NS	6.4	J	8.9	J	9.4	J	3.5	J
Chloroform		470	9.4		9.4		9.8	J	5.0	U
Semi-Volatile Organic Compounds (ug/L)	8270									
bis(2-Ethylhexyl) phthalate		5.92	10.0	U	4.8	J	4.1	J	5.2	J
Pesticides (ug/L)	8081A									
Dieldrin		0.000144	0.050	U	0.050	U	**0.021**	JP	NA	
4,4'-DDE		0.000591	**0.0082**	JP	**0.0039**	JP	**0.015**	J	NA	
Inorganic Metals (ug/L)	6010/7470									
Aluminum		Reserved	4,380		5,150		19,100		NA	
Antimony		4,300	1.5	U	1.5	U	3.1	B	NA	
Arsenic		0.1360	**10.3**		**11.4**		**34.5**	B	NA	
Barium		NS	82.4		86.8		186		NA	
Beryllium		Reserved	0.25		0.28		1.1	B	NA	
Cadmium		NS	0.58		0.71		3.4	B	NA	
Calcium		NS	119,000		122,000		123,000	B	NA	
Chromium		3,230	46.8		55.9		192		NA	
Cobalt		NS	3.2	U	3.2	U	15.3	B	NA	
Copper		Reserved	112		82.9		168		NA	
Iron		Reserved	5,810		7,650		34,800	B	NA	
Lead		NS	44.8		50.8		209		NA	
Magnesium		NS	206,000		208,000		281,000		NA	
Manganese		100	**1,460**		**1,520**		**1,470**		NA	
Mercury		0.146	**0.64**		**0.85**		**2.7**		NA	
Nickel		3,900	13		411		52.5		NA	
Potassium		NS	88,900		8,850		109,000		NA	
Selenium		NS	2.2		2.1	U	4		NA	
Silver		NS	1.6		2.1		5		NA	
Sodium		NS	1,870,000		1,880,000		2,450,000		NA	
Thallium		6.22	5.5		**6.5**		5.9		NA	
Vanadium		NS	12.4		13.5		52.2		NA	
Zinc		Reserved	281		158		359		NA	

Note: Only compounds detected are listed. Bolded values indicate an exceedance above the SWQS.
SWQS = Surface Water Quality Standards for a SE-3 Waterbody
B = Analyte quantified in blank sample as well as matrix sample
J = Indicates an estimated value below the Method Detection Limit.
P = Greater than 25% difference for detected concentrations between two GC columns (lower value reported).
U = Undetected (number in column is the MDL)
NA = Not applicable or not analyzed.
ND = Not Detected
NS/Reserved = No standard
None = none which would render the waters unsuitable for the designated uses.
ug/L = microgram per liter

Table 2
Dewatering Liquid
Field Measurements for Toxicity Testing
JCI/Upcycle

Parameter	*Result*	*Units*
pH	7.4	Standard units (SU)
Conductivity	2.1	microSeimens (µS)
Temperature	24.8	degrees Centigrade
Turbidity	560	nephelometric turbidity units (NTU)
Dissolved Oxygen	6.1	milligrams per liter (mg/L)
Salinity	1.2	percent (%)
Total Dissolved Solids	13	grams per Liter (g/L)
Oxygen Reduction Potential	18	milli Volts (mV)
Ammonia	3.6	grams per Liter (g/L)

APPENDIX A

EXPLANATORY LETTER FROM LABORATORY REGARDING METHANOL PRESERVATION

SEVERN TRENT SERVICES

STL Baltimore
19 Loveton Circle
Sparks, MD 21152
Tel 410 771 4920
Fax 410 771 4407
www.stl-inc.com

October 11, 2000

In accordance with the specifications set forth in *The Management and Regulation of Dredging Activities and Dredged Material in New Jersey's Tidal Waters*, October 1997 Attachment 1, Page 1, volatiles analyses must be performed using low level sample preparation procedures. As NJ MeOH procedure constitutes a medium level extraction, it does not allow satisfaction of the program goals. Please see attached example Forms I and the resultant reporting limits.

Quote No.: 37196
Revision: 1-00
Dated: 7/02/2000
Printed: 9:17:34 - 9/12/2000
Client Number: 419910
Project Manager: Carrie L. Gamber
Protocol: B 28 Day TAT - Sediment
SAC: XX A 4D QK 01
List: 05003
Units: ug/kg
Test Description: SOLID, 8260B, Voas, ~~Tab Preserved Encore~~ Low Conc

Analytical TAT: 26
Networkable (Y/N): Y
Tics (Y/N): N
Dry Weight (Y/N): Y
Qualifiers (Y/N): Y

Synonym	Name	RL
00011	Acetone	20
00196	Benzene	5
00323	Bromodichloromethane	5
00340	Bromoform	5
00343	Bromomethane	10
00372	2-Butanone	20
00459	Carbon disulfide	5
00463	Carbon tetrachloride	5
00521	Chlorobenzene	5
00535	Dibromochloromethane	5
00550	Chloroethane	10
00569	Chloroform	5
00574	Chloromethane	10
00933	1,1-Dichloroethane	5
00936	1,2-Dichloroethane	5
00943	1,1-Dichloroethene	5
00952	1,2-Dichloroethene (total)	5
00986	1,2-Dichloropropane	5
00998	cis-1,3-Dichloropropene	5
01000	trans-1,3-Dichloropropene	5
01332	Ethylbenzene	5
01515	2-Hexanone	20
01811	Methylene chloride	5
01845	4-Methyl-2-pentanone	20
02355	Styrene	5
02439	1,1,2,2-Tetrachloroethane	5
02445	Tetrachloroethene	5
02489	Toluene	5
02518	1,1,1-Trichloroethane	5
02522	1,1,2-Trichloroethane	5
02525	Trichloroethene	5
02613	Vinyl chloride	10
02627	Xylenes (total)	5

Quote No.: 37196
Revision: 1-00
Dated: 7/02/2000
Printed: 9:17:34 - 9/12/2000
Client Number: 419910
Project Manager: Carrie L. Gamber
Protocol: B 28 Day TAT - Sediment
SAC: XX A 4C QK 01
List: 05003
Units: ug/kg
Test Description: SOLID, 8260B, Voas, Field Preserved MeOH

Analytical TAT: 26
Networkable (Y/N): Y
Tics (Y/N): N
Dry Weight (Y/N): Y
Qualifiers (Y/N): Y

Synonym	Name	RL
00011	Acetone	1000
00196	Benzene	250
00323	Bromodichloromethane	250
00340	Bromoform	250
00343	Bromomethane	500
00372	2-Butanone	1000
00459	Carbon disulfide	250
00463	Carbon tetrachloride	250
00521	Chlorobenzene	250
00535	Dibromochloromethane	250
00550	Chloroethane	500
00569	Chloroform	250
00574	Chloromethane	500
00933	1,1-Dichloroethane	250
00936	1,2-Dichloroethane	250
00943	1,1-Dichloroethene	250
00952	1,2-Dichloroethene (total)	250
00986	1,2-Dichloropropane	250
00998	cis-1,3-Dichloropropene	250
01000	trans-1,3-Dichloropropene	250
01332	Ethylbenzene	250
01515	2-Hexanone	1000
01811	Methylene chloride	250
01845	4-Methyl-2-pentanone	1000
02355	Styrene	250
02439	1,1,2,2-Tetrachloroethane	250
02445	Tetrachloroethene	250
02489	Toluene	250
02518	1,1,1-Trichloroethane	250
02522	1,1,2-Trichloroethane	250
02525	Trichloroethene	250
02613	Vinyl chloride	500
02627	Xylenes (total)	250

Limits from Bridge Gundi

Attachment 1

TARGET ANALYTE LIST		
Analyte	Limits of Detection	
Volatiles	Water (ug/L)	Soil (ug/Kg)
Chloromethane	10	10
Bromomethane	10	10
Vinyl Chloride	10	10
Chloroethane	10	10
Methylene Chloride	10	10
Acetone	10	10
Carbon Disulfide	10	10
1,1-Dichloroethene	10	10
1,1-Dichloroethane	10	10
1,2-Dichloroethene (total)	10	10
Chloroform	10	10
1,2-Dichloroethane	10	10
2-Butanone(MEK)	10	10
1,1,1-Trichloroethane	10	10
Carbon Tetrachloride	10	10
Bromodichloromethane	10	10
1,2-Dichloropropane	10	10
cis-1,3-Dichloropropene	10	10
trichloroethene	10	10
Dibromochloromethane	10	10
1,1,2-Trichloroethane	10	10
Benzene	10	10
trans-1,3-Dichloropropene	10	10
Bromoform	10	10
4-Methyl-2-pentanone(MIBK)	10	10
2-Hexanone	10	10
Tetrachloroethene	10	10
1,1,2,2-Tetrachloroethane	10	10
Toluene	10	10
Chlorobenzene	10	10
Ethylbenzene	10	10
Styrene	10	10
Xylenes(total)	10	10
Semivolatiles		
Phenol	10	660
bis-(2-Chloroethyl)ether	10	660
2-Chlorophenol	10	660
1,3-Dichlorobenzene	10	660
1,4-Dichlorobenzene	10	660
1,2-Dichlorobenzene	10	660
2-Methylphenol	10	660
2,2'-oxybis(1-Chloropropane)	10	660
4-Methylphenol	10	660
N-Nitroso-di-n-propylamine	10	660

3

Aqua Survey, Inc.

BIOMONITORING REPORT
(Screening Tests)

GZA COMPANY

October 2, 2000

JOB #20-368

499 Point Breeze Road
Flemington, NJ 08822

Phone: 908/788-8700
Fax: 908/788-9165
E-mail: aquasurvey@aol.com
Web Site: www.aquasurvey.com

ASI BIOMONITORING REPORT

TEST SUMMARY

CLIENT: GZA Geo Enviromental
65 Willowbrook Road
Wayne, NJ 07470

TYPE OF TESTS: 48-hour Acute Screening Tests

DATES OF TESTS: Quench Water - September 5-7, 2000

SPECIES: *M. bahia*

SUMMARY OF RESULTS: Percent Survival

Concentration	Percent Survival
Control	100%
100% Quench Water	95%

Certification:

Accuracy of report certified by:

Thomas J. Dolce 10/2/00

Thomas J. Dolce
Laboratory Manager

Date

GZA: 20-368

499 Point Breeze Road / Flemington, NJ 08822
Phone: 908/788-8700 Fax: 908/788-9165 E-mail: aquasurvey@aol.com Web Site: www.aquasurvey.com

METHOD

Sample Collection: Geon personnel

Sample Type: 24 hour Composite __ Other __ Describe: Grab

SAMPLE	SAMPLE COLLECTION		SAMPLE DATA TAKEN UPON ARRIVAL AT LABORATORY			USE IN TOXICITY TEST	
	Date	Time	Temp.	D.O.	pH	Date(s)	Time(s)
Quench Water 21513	9/1/00	1045	11.2	5.8	7.2	9/5/00	1615

Dilution Water: 40 Fathoms

Organisms: *M. bahia;* ASI Culture
Hatch Date: 9/1/00
Age: 4 days old

Effects Measured: Survival

TEST DESIGN

Number of Effluent Concentrations: 2 (50%, 100%)
Number of Replicates per Test Concentration: 2
Number of Test Organisms per Replicate: 10
Number of Test Organisms per Test Concentration: 20
Test Chamber Size: 800 mL Exposure Volume: 500mL

499 Point Breeze Road / Flemington, NJ 08822
Phone: 908/788-8700 Fax: 908/788-9165 E-mail: aquasurvey@aol.com Web Site: www.aquasurvey.com

WATER QUALITY PARAMETERS

SAMPLE		TEMPERATURE (°C)			D.O. (mg/L)			pH (su)		
		Hours			Hours			Hours		
		0	24	48	0	24	48	0	24	48
21513 Quench Water	Control	21.74	21.84	21.50	7.31	6.64	6.81	7.75	7.78	7.83
	100%	21.97	21.77	21.57	7.03	4.94	5.34	7.84	7.69	7.81

Miscellaneous:

Temperature was maintained within +/- 2°C of test temperature.
Test chambers were not aerated during the test.

499 Point Breeze Road / Flemington, NJ 08822
Phone: 908/788-8700 Fax: 908/788-9165 E-mail: aquasurvey@aol.com Web Site: www.aquasurvey.com

APPENDIX

AQUA SURVEY, INC.
48 HOUR ACUTE BIOASSAY
LIVE COUNTS AND OBSERVATIONS

Job#: 28-368

Client: GZA

Species: M. bahia

Test Volume: 20± 500mL

Test Temperature: 20±2°C

Conc.	Observation Interval- Hours					
	0		24		48	
	Live Count	Observ.	Live Count	Observ.	Live Count	Observ.
Con A	10	1	10	1	10	1
B	10	1	10	1	10	1
50 A	10	1	10	1	10	1
B	10	1	10	1	10	1
100 A	10	1	10	1	10	1
B	10	1	10	1	9	1
A						
B						
A						
B						
A						
B						
Date	9/5/00		9/6/00		9/7/00	
Initial	[illegible]		[illegible]		MMA	

Terms and Codes for Test Organisms ' Appearance and Behaviour

Term	Explanation	Code
Normal	Unaffected	1
Inactive	Abnormally low activity, motionless or nearly so, weak & enfeebled	2
Irritated	Hyperactivity, muscle spasms, erratic swimming	3
Surfacing	Rising and remaining unusually long at the surface	4
Abnormal body orientation	Inverted or turned approximately 90° laterally from normal body position	5
Abnormal skin color	Light discolored, dark discolor, or varidiscolored (mottled)	6
Abnormal skin condition	Mucus shedding or coagulations, hemorrahaging from gills, eyes or anal opening	7
Abnormal respiration	Rapid, slow, gulping or periodic flexure of the operculum of fish as to reverse water flow (coughing)	8

AQUA SURVEY, INC.
48 HOUR BIOASSAY

GENERAL INFORMATION

Job #: 26-368 Client: GZA Organism: M. bahia

Dilution Water: Receiving _____ Culture ✓ 48 Fathoms Alternative _____

Test Volume: 500 mL Test Type: Flow Through _____ Static Daily Renewal _____ Static Non-Renewal ✓ Chamber Volume: 500 mL

Light: 5--100 fc _____

Test Start Date: 9/5/00 Time: 1615 Technician: m

Test End Date: 9/7/00 Time: 1530 Technician: MAS

ACCLIMATION INFORMATION (laboratory or field acclimation only)

Exchange rate: Drip _____ Meter, pump _____ Exchange rate (mL/min) _____

Start date: _____ Time: _____ Chamber volume: _____

End date: _____ Time: _____ Feeding: Day 0 _____ Day 1 _____ Day 2 _____ Day3 _____

Remarks: _____ Mortality: Day 0 _____ Day 1 _____ Day 2 _____ Day 3 _____

Temperature range: (field use only) Temperature: (lab use only) Day 0 _____ Day 1 _____ Day 2 _____ Day 3 _____

N/A

DILUTER INFORMATION

Set up date: _____ Water used: _____ Diluter number: _____ Technician: _____

Cycles during pretest: _____ Elapsed pretest time: _____

Day 1 cycles: _____ Elapsed time: _____ Day 2 cycles: _____ Elapsed Time: _____

Day 3 cycles: _____ Elapsed time: _____ Total cycles: _____ Elapsed Time: _____

DESCRIPTION OF SAMPLES (use only for in-lab samples)

Effluent odor: Slight Color: yellow-brown Other: brown/black particulate matter

Diluent odor: None Color: Clear Salinity: 25 ± 2 ppt Other:

ASI Number	Sample Data taken upon arrival at laboratory		Use in toxicity test	
	D.O.	pH	Date(s)	Time(s)
21513	5.8	7.2	9/5/00	1615

AERATION PROCEDURE

Aeration required: _____ Aeration not required ✓

Description of problem: DO levels below 50% saturation _____ DO levels dropping rapidly _____

Cycles increased: Date: _____ Time: _____ Technician: _____

Dilution aeration begun: Date: _____ Time: _____ Technician: _____

Test aeration begun: Date: _____ Time: _____ Technician: _____

forms-wp\covep1.wpfr

AQUA SURVEY, INC.
96 HOUR BIOASSAY

JOB #: 21-368 ORGANISM: M. bahia

CLIENT: GZA

CONC		ALKALINITY mg/L in 25 mL					HARDNESS mg/L in 25 mL				
		0	24	48	72	96	0	24	48	72	96
0	Start	0.0									
	Stop	2.3									
	Diff	2.3							N		
	x	40	40	40	40	40	40	40	A 40	40	40
		92									
	Initial /Date/ Time	9/15/00 1630									
100	Start	1.0					0.0				
	Stop	7.0					18.5				
	Diff	6.0					18.5				
	x	40	40	40	40	40	100 40	40	40	40	40
		240					1850				
	Initial /Date/ Time	9/15/00 1630					MGS 1015 9/12/00				

Residual Chlorine mg/L					
Conc.	0	24	48	72	96
0	ND				
100	ND				
Initial/ Date/ Time	9/15/00 1630				

Job #: 20-368
Client: GZA
Sample: EFF
ASI Sample #: 21513
Collection Date/Time:
Approx. sample volume: 4L
Initial pH 7.5
(Salinity adjusted): 7.81

Normality & Vol. of HCl/NaOH: N/A pH:

Normality & Vol. of HCl/NaOH: pH:

Normality & Vol. of HCl/NaOH: pH:
Date/Time: 9/5/00 1600 Initial:

ASI Sample #:
Collection Date/Time:
Approx. sample volume:
Initial pH
(Salinity adjusted):

Normality & Vol. of HCl/NaOH: pH:

Normality & Vol. of HCl/NaOH: pH:

Normality & Vol. of HCl/NaOH: pH:
Date/Time: Initial:

ASI Sample #:
Collection Date/Time:
Approx. sample volume:
Initial pH
(Salinity adjusted):

Normality & Vol. of HCl/NaOH: pH:

Normality & Vol. of HCl/NaOH: pH:

Normality & Vol. of HCl/NaOH: pH:
Date/Time: Initial:

ASI Sample #:
Collection Date/Time:
Approx. sample volume:
Initial pH
(Salinity adjusted):

Normality & Vol. of HCl/NaOH: pH:

Normality & Vol. of HCl/NaOH: pH:

Normality & Vol. of HCl/NaOH: pH:
Date/Time: Initial:

AQUA SURVEY, INC.

CULTURE LAB DISTRIBUTION FORM

DATE: 9/5/00

TEST JOB#: 20-368 CLIENT: GZA

TEST LOCATION: IN-LAB [x] FIELD [ ]

TEST SPECIES: M. bahia

TOTAL NUMBER ORGANISMS TRANSFERRED: 80+

AQUA SURVEY, INC. CULTURE LAB INVESTIGATORS: CC/CD

A. ORGANISMS

1. ASI CULTURE/HOLDING UNIT: 20 gallon Tank
2. RECEIVING LOG #: N/A
3. CULTURE LOG #: 20-0565
4. AGE/SIZE INFORMATION: 1-5day HD 9/1/00

B. HOLDING [X] CULTURE [ ] WATER PARAMETERS

1. TEMPERATURE: 25.1°C
2. SALINITY: 25.4ppt
3. WATER SOURCE: 40 Fathoms

C. TRANSFER CUSTODY & TRANSFER

1. LIVESTOCK RELINQUISHMENT DATE: 9/5/00
   TIME: 1600hrs
   BY: CC

2. LIVESTOCK RECEIVING DATE: 9/5/00
   TIME: 1600hrs
   BY: [illegible]

3. CULTURE SUPERVISOR OR SENIOR TECH. INITIALS: CD

REMARKS:

Sept 4- Sept. 12, 2000

AQUA SURVEY, INC.
Hardness Worksheet

Lot # EDTA: 1907197
Molarity EDTA: 0.0100M

Job #	ASI #	Dish ID	Sample Volume (mL)	Burette Reading Initial	Burette Reading Final	Difference	mg/L* $CaCO_3$	Initial/ Date/Time
20-369	21514	XX	25	0	2.2	2.2	88	JLH 9/12/00 1015
20-369								
20-369								
20-370	21515	AC	25	2.2	6.8	4.6	184	JLH 9/12/00 1015
20-370								
20-370								
20-371/372	21516	J	25	6.8	7.7	0.9	36	JLH 9/12/00 1015
20-371								
20-371								
Recon		KK	25	7.7	9.7	2.0	80	JLH 9/12/00 1015
Recondup		G	25	9.7	11.8	2.1	84	9/12/00 JLH 1015
Recontrp		V	25	11.8	14.2	2.4	96	JLH 9/12/00 1015
20-368	21513	F	10	0	18.5	18.5	1850	JLH 9/12/00 1015
20-375	21517	Z	25	0	22.1	22.1	884	JLH 9/12/00 1015

* mg $CaCO_3$ = AxBx1000/mL sample
Where A= volume of standard of EDTA titrant used
Where B= 1 when EDTA molarity is 0.01
NOTE: If sample volume is changed the simplified equation must be altered to reflect change

Or simplified when 25mL sample used mg $CaCO_3$/L = Ax40

368B-0.DAT

	DateTime	Temp	SpCond	Salinity	DO Conc	pH
	M/D/Y	C	uS/cm	ppt	mg/L	
0	09/05/00 16:07:04 0	21.74	39785.0	25.42	7.31	7.75
1	09/05/00 16:10:26 50	21.96	40072.0	25.62	6.86	8.00
2	09/05/00 16:16:37 100	21.97	40090.0	25.64	7.03	7.84

Project #: 28-368 Test type: ☑ ACUTE ☐ CHRONIC ☐ OTHER _____ Date: 9/5/00

Species: ☐ *P. promelas* ☐ *C. dubia* ☑ *M. bahia* ☐ Other _____ Day of Study: 1

OPERATIONAL RANGE: Check if OK

Temperature: 18 to 22 ☑

Salinity: 23 to 27 ☑

Dissolved oxygen: >40% ☑

pH: 6.0 to 9.0 ☑

Meter Used: Blue ☑ Red ☐

Actions taken: _____

See deviation summary sheet ☐

Initials: m

Tue Sep 05 16:20:34 2000

368-24.DAT

	DateTime		Temp	SpCond	Salinity	DO Conc	pH
	M/D/Y		C	uS/cm	ppt	mg/L	
0	09/06/00 09:30:19	0	21.84	39970.0	25.55	6.64	7.78
1	09/06/00 09:30:46	50	21.71	40591.0	25.99	5.87	7.74
2	09/06/00 09:31:11	100	21.77	40691.0	26.06	4.94	7.69

Project #: 368 **Test type:** ☑ACUTE ☐CHRONIC ☐OTHER _____ **Date:** 9/6/00

Species: ☐ *P. promelas* ☐ *C. dubia* ☑ *M. bahia* ☐Other _____ **Day of Study:** 24 hr.

OPERATIONAL RANGE: Check if OK **Meter Used:**

Temperature: 18 to 22 ☑ **Blue** ☐

Salinity: 23 to 27 ☑ **Red** ☑

Dissolved oxygen: >40% ☑

pH: 6.0 to 9.0 ☑

Actions taken: _____

See deviation summary sheet ☐ **Initials:** MH

Wed Sep 06 09:36:42 2000

368B-48.DAT

	DateTime	Temp	SpCond	Salinity	DO Conc	pH
	M/D/Y	C	uS/cm	ppt	mg/L	
0	09/07/00 11:05:57 0	21.50	40126.0	25.67	6.81	7.83
1	09/07/00 11:06:14 50	21.52	41293.0	26.50	6.31	7.82
2	09/07/00 11:06:36 100	21.57	41553.0	26.68	5.34	7.81

Project #: 368 **Test type:** ☑ACUTE ☐CHRONIC ☐OTHER _____ **Date:** 9/7/00

Species: ☐ *P. promelas* ☐ *C. dubia* ☑ *M. bahia* ☐Other _____ **Day of Study:** 48hrs.

OPERATIONAL RANGE: Check if OK **Meter Used:**

Temperature: 18 to 22 ☑ **Blue** ☑

Salinity: 23 to 27 ☑ **Red** ☐

Dissolved oxygen: >40% ☑

pH: 6.0 to 9.0 ☑

Actions taken: _____

See deviation summary sheet ☐ **Initials:** MA

Thu Sep 07 11:13:22 2000

ari 20-368

Job #	75251.1	Sample Collection Point Description	Dewater Liquid	Shipping Information To:	GZA GeoEnvironmental, 65 Willowbrook Blvd
Client	GZA GeoEnvironmental			From:	Wayne, NJ 07470
Facility Location	Stratus				
		TEST TYPE	Acute ___ Diluent Only ___		
Discharge #			Chronic ✓ Other ___		
Contact	Mindy Sayers	Diluent Collection Location	N/A	Shipment Method / Special Instructions	FED EX
Phone #	973-256-7800				

Sample Type Key: C = composite; G = grab; S = soil; SD = sediment; SL = sludge

Diluent/Effluent Sample Number	Collected By Name(Please Print) / Date / Time	Sample Type	Sample Volume	Relinquished By Signature / Date / Time	Received By Signature / Date / Time	Relinquished By Signature / Date / Time	Received By Signature / Date / Time
DW-1	Brian D'Agostino 9/1/00 1045	G	2x1L	[signature] 9/1/00 1400	Fed EX	[signature] 9/1/00 1400	
ASI# 21573							
✓	✓	✓	✓	✓			

ASI, INC.
SAMPLE RECEIVING FORM

Client: GZA

Job #: 20-368

Shipped Via: Fed Ex

# of Shipping Containers: 1

Type of Shipping Container: Cooler

Custody Seal: Present ✓ Absent _ Broken _

Condition of Shipping Containers: Acceptable ✓ Unacceptable ___

	ASI #	Sample ID	Type of Container	Number of Containers	Condition of Samples†	Temp. °C	Ice +	Type of Sample*
1.	21513	EFF	P	2	A	11.2°C	I	E
2.								
3.								
4.								
5.								
6.								
7.								
8.								
9.								
10								

Notes: (Discrepancies Between Sample Label and COC Record)

Opened /Received by: MThomas

Date/Time: 9/1/20 1200

*
S - Soil
Se - Sediment
Sl - Sludge
W - Water
E - Effluent

†
A - Acceptable
U - Unusable or Contaminated

+
I - Ice
D - Dry Ice
B - Blue Ice
N - None

7/96

OPERATIONS SERVICES CORPORATION

P.O. Box 260123
LAKEWOOD, CO 80226-0123

PH (303) 984-2060
FAX (303) 989-4989

Mr. Jay Derman, P.E.
JCI/Upcycle Associates, LLC
P.O. Box 11389
Loudonville, NY 12211-0389

November 1, 2000

Re: Project Report: Solid/Liquid Separation & Solids Dewatering Pilot
Passaic River Sediments; Stratus Petroleum, Newark, NJ
Operations Services Corporation Project 99_017

Dear Jay:

This document reports the data, observations, and results of a pilot project conducted by Operations Services Corporation (OSC) as a subcontractor to the JCI/Upcycle Associates, LLC (JCI/Upcycle) joint venture, at a site located within the property boundaries of Stratus Petroleum in Newark, NJ, in June, July, and August of 2000. Pilot work performed was sanctioned and regulated by the State of New Jersey, Department of Transportation, Maritime Resources division.

The primary objective of the program was the pilot-scale evaluation of a waterway dredged-sediment decontamination technology pioneered by JCI/Upcycle. That technology incorporates a solid/liquid separation and solids dewatering step to properly prepare sediments for subsequent treatments; it is the separation and dewatering step which was contracted and performed by OSC, and addressed in this report. Other components potentially inherent in the overall process such as dredging, introduction of fixation and/or binding agents, thermal treatments, etc. were not included in OSC's scope of work, and are therefore not discussed in this report.

Introduction & Background

On August 25, 1999 and May 31, 2000, OSC evaluated Passaic River sediment samples provided by JCI/Upcycle. These samples were obtained from the dredged sediment supply and judged to be typical of the sediments being considered for testing by the State of New Jersey, Maritime Resources. The evaluations' objectives were to establish the applicability of OSC's proprietary solid/liquid (S/L) separation and dewatering technologies to the sediment, measure some of the physical properties of the sediment, and generate data necessary for cost estimation. (Because the separation technology uses polymeric flocculant, the cost of that agent is an important variable in project cost scheduling.) The bench-scale test work clearly showed the sediment to be responsive to flocculation, with a dosage of approximately 5.0-6.5 pounds of polymeric flocculant (~30%

concentration basis) per dry ton of sediment. The flocculated sediment separated efficiently, showing minimal losses to the aqueous phase, and dewatered well, with a predicted belt press cake solids content of 40-45% by weight.

OSC followed the laboratory study with budgetary and, following receipt of the State bidding documents, final quotations for the pilot dewatering operation. In addition, OSC submitted to the State and JCI/Upcycle Equipment Inventory Information, Air Permit Emission Point Inventory data, and site layout drawings. In accordance with guidance provided by the State in response to these submittals, OSC began mobilizing equipment to the Stratus Petroleum site in late June 2000, set up the equipment through July 14, and began processing sediment the week of July 17. On July 27, the results of analysis performed on a grab sample of dewatered sediment showed a mercury concentration that was greater than anticipated. Operation was suspended until August 21, 2000. Following completion of operations on September 2, equipment was demobilized and the site cleared by September 18.

Site Plan and Process Description

Figure 1, attached, shows the finalized site plan with respect to OSC's separation and dewatering equipment. To accommodate some low-hanging high-voltage power lines, the original set-up was altered slightly from the original submittals.

In operation, slurried sediments were pumped from the floating scows to Tank T-1. Oversized (greater than ~½") debris was removed using a static screen (SS), through which the slurry was pumped. To adjust the solids concentration of the slurry accumulated in T-1, river water was pumped to T-1 on an as-needed basis. Tank T-1 was equipped with three electric motor-driven stirrers to blend the slurry, ensuring consistent solids concentration per batch. Prepared slurry was pumped to the Control Module, where the flow rate was regulated using hand-controlled valving and a Doppler flow indicator. Slurry then flowed to the Primary Dewatering Module (PDM) where it contacted and was thoroughly mixed with polymeric flocculant. The now-flocculated slurry discharged onto a separation panel, separating floccules from the aqueous phase. Accumulating floccule masses transferred by gravity to a 2.5-meter Parkson belt press for secondary, mechanical dewatering. Water from both primary and secondary dewatering was directed to the belt press collection reservoir; small centrifugal pumps transferred it to Tank T-2 for initial settling, then to Tank T-3 for final settling.

Solids captured and dewatered by the PDM and belt press discharged into a screw conveyor, which in turn deposited the solids onto a short belt conveyor. Accumulating solids were either briefly stockpiled, or discharged directly into the bucket of a front-end loader for placement in lined roll-off containers.

Description of Operations

Feed Preparation: A submersible centrifugal pump suspended from a cable was used to transfer sediment from the storage scows to Tank T-1. Because the sediments had been held in the scows for several months prior to the project's start, the sediments had consolidated somewhat and proved difficult to re-suspend. To increase pumping efficiency, both river water and, after operations began, process water were used to flood the sediment in the scows. This procedure, in combination with dilution using process and river water, permitted a relatively consistent supply of slurry at appropriate solids concentration. Because Tank T-1 was filled alternately with either thick slurry or water, resulting in a non-homogenous mixture during fill episodes, the S/L separation and dewatering operation was run on a batch-continuous, rather than fully continuous basis.

The static screen recovered only a very small quantity of debris, mainly litter, from the slurried sediments. The sediments consisted of very fine-sized material, with no significant quantity of sands or even silts.

Primary Dewatering: Prepared slurry was pumped from Tank T-1 to OSC's Control Module. An operator controlled the flow rate of slurry to the PDM by a diaphragm valve; the flow rate was measured by a Doppler-principle flow meter. With some expected variation due to downstream process requirements, slurry flow ranged from about 250 gallons per minute (gpm) to 400 gpm. Periodic measurements of the solids concentration (by Coriolis-principle device) showed values from 5% to 12% solids by weight. This approximate range was established in bench-scale testing as the optimal range for proper and efficient flocculation. When too-dilute or too-enriched slurry was prepared inadvertently, operations were briefly halted and adjustments (addition of water or sediments) made to Tank T-1 contents.

In addition to slurry flow regulation, the Control Module prepared dilute flocculant for use. The emulsion flocculant product (Calgon WT-2706 anionic emulsion), supplied at a nominal concentration of about 30%, was diluted in an automated process to supply a dosing concentration of approximately 0.75 - 2.0 grams per liter. The prepared flocculant was pumped to the PDM-located slurry/polymer mixer with a progressive cavity pump controlled by either the operator in manual mode, or proportionally to the slurry density as measured by the Coriolis instrument. The dilute flocculant flow rate typically ranged between 10 and 20 gpm in response to slurry flow rate and density, and polymer concentration.

Dilute flocculant and prepared, metered slurry were mixed at the PDM in an OSC-designed static mixer. By swapping individual elements in this mixer, mixing intensity could be varied as required to effect efficient flocculation. Flocculated slurry exited the static mixer and entered the PDM, finally discharging onto a separation panel. Approximately 85% of the free water was extracted in this step, with recovered solids accumulating on the panel and ultimately transferring, by

gravity flow, to the belt press feed zone. Recovered water flowed to the belt press basin.

Secondary Dewatering: The Parkson 2.5-meter belt press received the well-flocculated and partially dewatered solids on a moving fabric belt. The press's mechanical dewatering action served to squeeze out the water interstitial to the floccule masses. Because the floccule structure was preserved by the process, a clear pressate with low suspended solids content resulted. The secondary-dewatered solids exited the press into a screw- or belt-conveyor, depending upon equipment configuration. Accumulating dewatered solids were placed in poly-lined roll-off containers; the containers were covered upon filling. Pressate combined with PDM water reported to the belt press basin, then was pumped to Tank T-2 for clarification.

Process Data

Depending upon feed slurry flow rate and prepared slurry solids concentration, the throughput range of the pilot equipment configuration was 3 - 13 tons per hour, on a dry solids basis. This datum is based on flow rates of 250-400 gpm, and solids concentrations of 5-12% by weight. Based on data for total polymer consumed over the course of the project and average dilute flocculant flow rates, the field dosage was approximately 3.0-3.5 pounds emulsion product (@~30% concentration) per dry ton of solids processed. This value is significantly lower than the bench scale datum of 5-6.5 lbs/ton polymer consumption.

Using a typical flow rate value of 375 gpm, a slurry solids content of 10% solids, and a fully dewatered press cake solids content of 45% solids, the pilot process produced about 0.34 cubic yards of dewatered solids per minute. This value is in good agreement with the observed accumulation rates during operations. Note that the press cake solids content varied with changes in specific process variables, especially slurry solids concentration. Because smaller floccules entrain less water than larger floccules, and because elevated slurry solids concentrations tend to favor the formation of relatively larger floccules, press cake solids concentration was inversely proportional to feed slurry solids concentration.

Belt press loading, using the processing example above and assuming a primary-dewatered product solids concentration of 25%, was about 0.78 cubic yards per minute, or about 0.02 cubic yards per foot of moving belt (@ 40 feet per minute.) In terms of dry solids, the press handled about 325 pounds per minute; in terms of slurry volume, about 140 gallons per minute.

Process Considerations

Pilot operations serve as an opportunity to explore and evaluate the unique set of parameters that only arise in continuous operation. This section discusses the Stratus pilot, the lessons learned, and considerations for larger scale processing.

Process Sensitivities: The pilot work was instructive in defining the actual and potential sensitivities of the S/L separation and solids dewatering process. Because OSC's mobile equipment was designed to incorporate much of the equipment necessary for just this kind of work, sensitivity inherent in those unit operations has been minimized or eliminated. What remains are the effects of sediment and/or fluidizing water on the process chemistry or mechanics. The solids concentration of the feed slurry was clearly an area of process sensitivity, as mentioned in an earlier section of this report. Several of the requirements of the combined technology package are contradictory with respect to establishing an optimum solids concentration in feed slurry. The S/L separation and primary dewatering steps respond best to pulp densities near the top of the established acceptable range, building large, stable floccules, and the belt press can accept higher throughput when fed these larger floccule masses. However, large floccule formation is deleterious to press cake quality with respect to moisture content, and the function of the dewatering step is to prepare solids with as little free water as possible, to enable efficient and economical thermal preparation of aggregate. A challenge of "commercial" operation will be to balance these contradictory requirements.

The pilot run permitted the evaluation of different pulp densities and observation of the effects. The solids concentration of press cake resulting from feed pulp densities in the 5-10% solids range exceeded 55%, by weight. This cake quality was judged to be adequate for subsequent processing steps. The solids concentration of press cake produced from feed pulp density in the 10-12% solids range showed about 38% solids, by weight, and was judged to be marginal for subsequent processing. Examination of this variable at pilot scale provides guidance for larger scale operations, which should target a feed slurry pulp density of 8-10% solids.

Flocculant Dosage & Dosing: As remarked upon earlier in this document, the consumption of polymeric flocculant by the subject sediments was only about ½ - ⅔ of the predicted value. Because polymer is a major cost of operation, the implication of this datum is significant. In addition, the dosing rate was consistent throughout the pilot operation, suggesting that consumption does not vary significantly with changes in sediment properties or composition. While it is acknowledged that the relatively small volume of sediments available for testing probably does not exhibit the range of composition present in the entire waterway, the data is nevertheless valuable in demonstrating compositional uniformity within the limits of the exercise. The data suggest that, at the increased slurry flow rates of larger scale operation, polymer dosing rates will be relatively stable, contributing to steady-state operation.

Primary Dewatering: Well-flocculated sediments responded very well to OSC's proprietary primary dewatering technology. Flocculated solids were efficiently separated, and dewatered of about 85% of the free water. The equipment utilized for the pilot was deliberately undersized, relative to the belt press, to provide a processing margin for cake quality. The pilot information showed that:

- the PDM capacity was not exceeded by any mass flow rate supplied during the run, and

therefore a baseline throughput can be set for larger scale operation. This baseline is approximately 375 gpm/12% solids per 30 ft^2 of separation panel.

- flocculant dispersion in OSC's static mixer, at the baseline mass flow condition, was satisfactory; no changes will be required for scale-up
- aqueous phase evacuation was satisfactory at pilot scale; scale-up will be linear.

Secondary Dewatering: The belt press used in piloting was deliberately oversized, with respect to the PDM. Consequently, no capacity problems were expected or experienced. For larger scale operation, a similar over-capacity would be specified to prevent bottlenecking at this important step in the process. In commercial operation OSC uses specially modified belt presses which operate at higher maximum belt speeds than the Parkson used in the pilot run. These presses, by virtue of the greater belt speed, provide the desired capacity margin.

Conveyance: No scale-up issues are anticipated. The mass flow and solids concentration data will permit accurate sizing of all conveyance apparatus.

Process Flow Diagram

Figure 2 is a preliminary commercial process flow diagram prepared using the data and assumptions from the pilot operation. As can be seen, the PFD closely follows the processing scheme of the pilot operation, with two notable exceptions, an increased feed slurry surge capacity of two, 20,000-gallon tanks, and the use of filtration for final treatment of the aqueous phase prior to discharge.

The use of 2 feed surge tanks will allow one tank to be actively feeding the process, while the alternate tank is being filled with freshly excavated slurry.

The aqueous phase product will be initially clarified by settling, as was done in the pilot run. Because the suspended solids will be flocculated, settling will be effective as a primary step. To ensure process continuity, the clarifier supernate is filtered, probably through sand filters, to postively trap any remnant suspended solids.

Conclusions and Recommendations

The pilot sediment dewatering operation conducted at Stratus Petroleum successfully demonstrated the competence of OSC's equipment package, produced the required test quantities of dewatered solids, and generated data sufficient to advance the program to its next phase. OSC recommends that the PFD presented herein be fully developed and used as a basis for that next phase.

OSC appreciated the opportunity to participate in this technology evaluation. Please contact me or Robert Braddock with any questions on this document or the pilot operation.

Best regards,

OPERATIONS SERVICES CORPORATION

R. Lee Schwartz
Chief Engineer

pc: R. Braddock

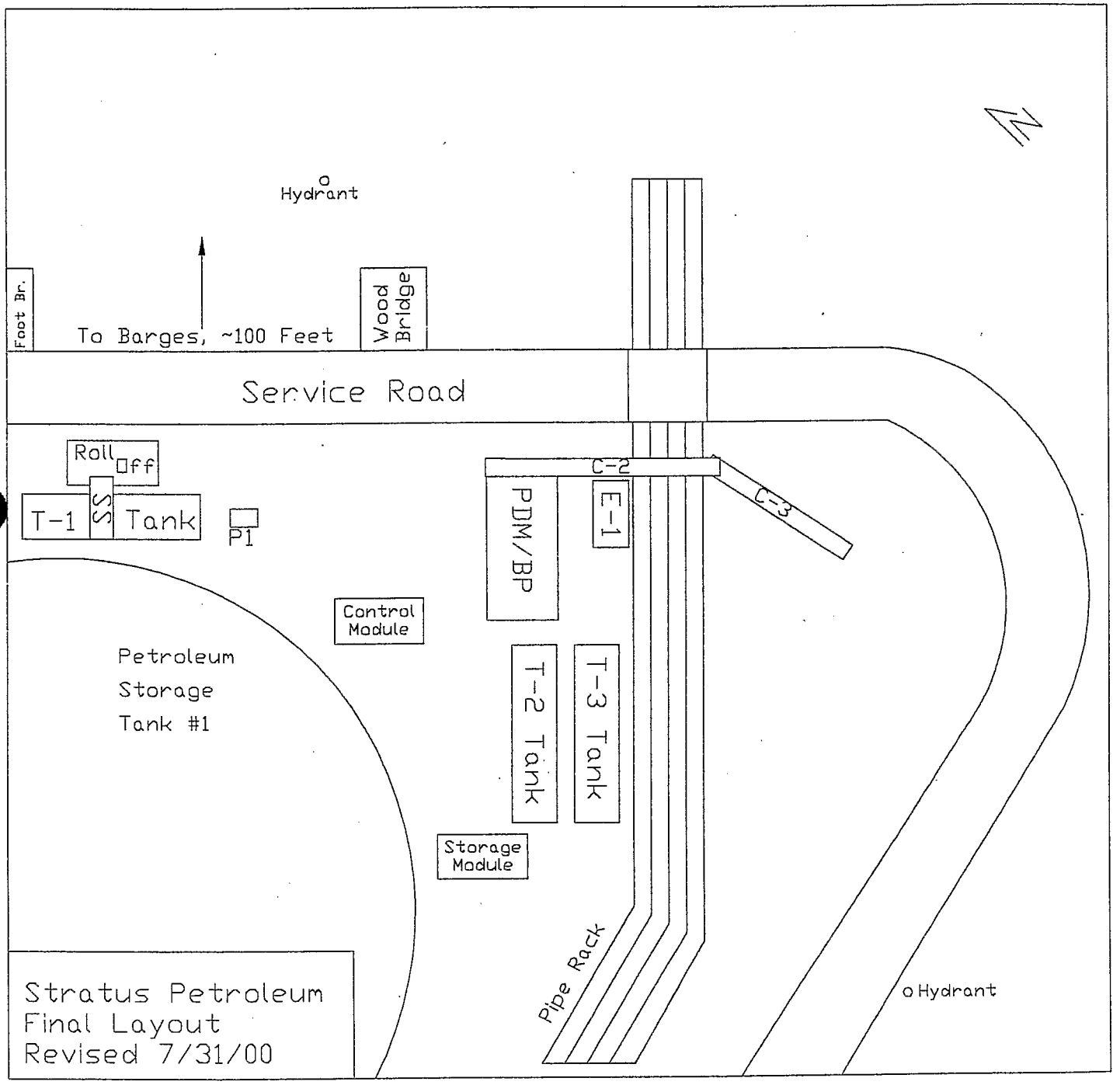
N
Hydrant
Foot Br.
To Barges, ~100 Feet
Wood Bridge
Service Road
Roll Off
SS
T-1
Tank
P1
C-2
C-3
E-1
PDM/BP
Control Module
Petroleum Storage Tank #1
T-2 Tank
T-3 Tank
Storage Module
Pipe Rack
o Hydrant
Stratus Petroleum
Final Layout
Revised 7/31/00

FIGURE 1

PRELIMINARY PROCESS FLOW DIAGRAM
New Jersey Maritime Resources Sediment Dewatering

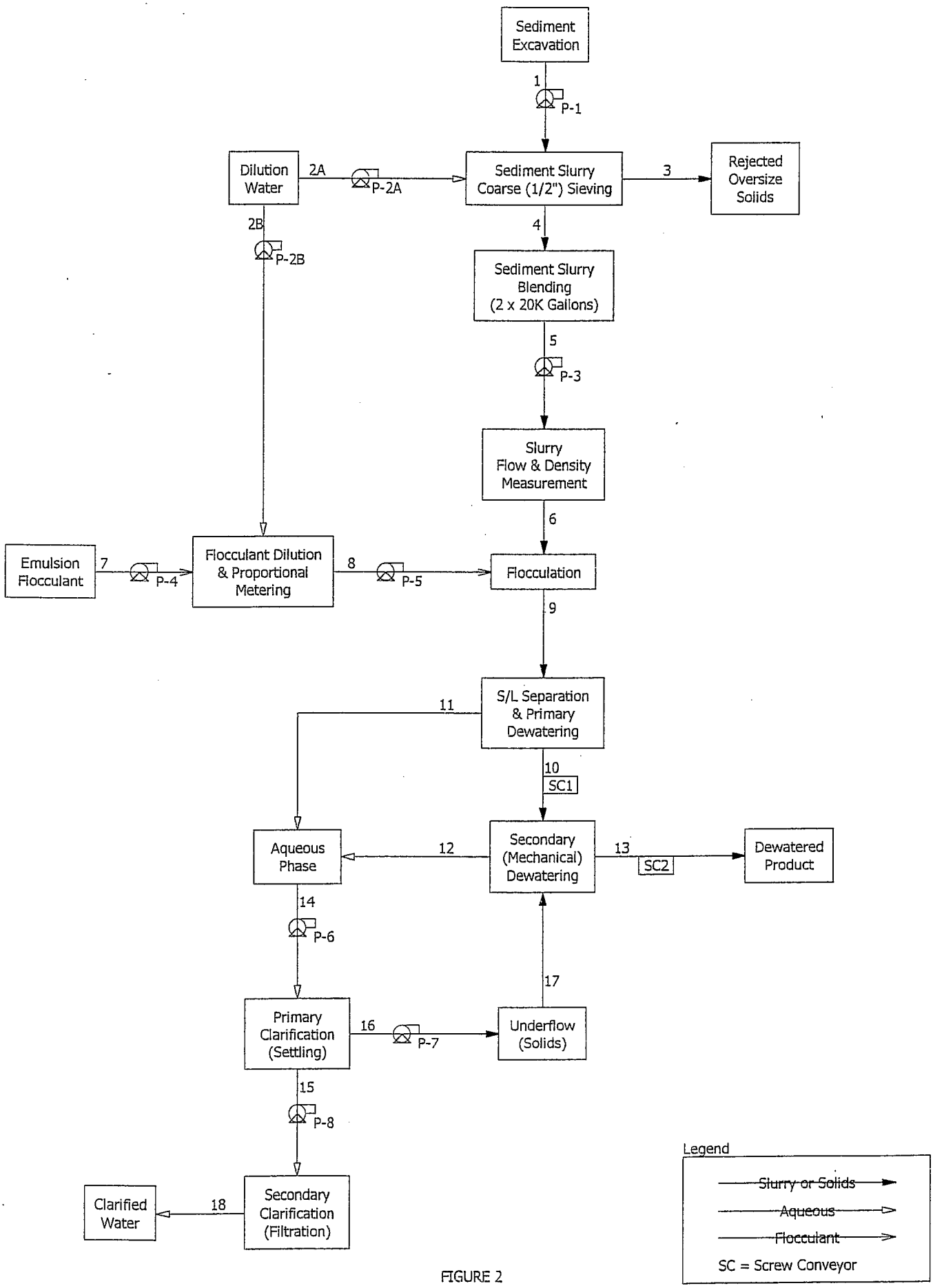

FIGURE 2

LEWIS corporation

15134 West Hunziker
Pocatello, Idaho 83202
Phone: 208-237-1314
Fax: 208-238-1834
www.lewiscorporation.com

Port of Newark Dredging Project --- Newark, NJ

To: Paul Bastian

From: Michael Patterson

Date: 9/25/00

Subject: Trip Report

Paul:

The following notes outline events encountered during my recent trip to Newark, NJ to assist in the production of briquettes from dredgings excavated from the Port of Newark.

I arrived at the jobsite at approximately 8:30 AM Thursday July 20th, escorted by Bob Braddock. Upon arrival I inspected the briquette press and confirmed that it was operational. I then energized the machine and explained its operation to two technicians who were assisting Bob Braddock. I then tried to process some material that had been ran through the filter press and deposited into the gravity feed hopper above the press. This material was thought to be "off spec" due to the condition of the belts in the filter press. Bob Braddock and his technicians spent the rest of that morning changing the filter belts. This off spec material was fairly wet, as free moisture could be seen and squeezed from the material. I attempted to process this material through the Briquette press, but had difficulty in getting the material to flow through the gravity feed hopper above the press and down into the rolls. The material would actual form a "bridge" above the rolls and would not feed down into the nip region (narrow gap between the rolls). This can be attributed to the wet condition of the material, which allowed the rolls to spin on the material , never generating enough frictional force to draw the material into the nip region, and thus be formed into briquettes. Once it became evident to me that the material was not going to feed into the rolls, I switched the rotational direction of the rolls in attempt to clear the off spec material from the gravity feed hopper. I supplemented this process by manually directing material onto the roll surface with the aid of a wooden 2x4 found at the jobsite.

Removal of the material from the briquette press coincided with the installation of the new belts in the filter press. With installation of the new belts complete, Bob Braddock and his technicians attempted to process more material through the filter press. This stage of processing was a trial and error procedure as they were attempting to calibrate the filter press to achieve its optimal performance.

This attempt at calibration generated a quantity of material that had to be run through the briquette press in order to remove it from the system. Accordingly, material was fed into the gravity feed hopper of the briquette press, meeting with the same results as earlier. The wet material formed a bridge in the hopper and would not feed into the nip region. Thus, I reverted back to the process described earlier for clearing the wet material from the briquette press. The wet nature of the material, coupled with the wash down water used to clean the press caused a number of the conveyor belts to slip on the non-lagged conveyor pulleys, requiring me to bring them back into adjustment.

A very few briquettes were produced, but would lose their shape upon being transferred with the adjoining conveying system. I was able to remove a few briquettes from the belt prior to the transfer point and set them aside. These briquettes were allowed to cure in the sun and did achieve the desired shape and hardness after approximately 5 hours of elapsed time.

Bob Braddock and his technicians continued to make adjustments to the filter press and flocculent injection system throughout the afternoon and into the early evening.

Friday July 21, 2000

I arrived at the jobsite and energized the press and conveying system and attempted to process more material that had been generated from the filter press. It appeared as though the filter press was working as intended, producing a thin (approximately 3/8" thick) sheet that broke up under its own weight into the receiving screw conveyor. The moisture content of the material did appear to be less than the material produced the day before. However, the briquetting results were nearly the same as the earlier trials. No free moisture could be squeezed from the material, but it is was still too wet to feed into and be processed by the briquette press.

I repeated the procedure described earlier to remove the material from the press, in hopes of receiving drier material from the filter press.

After making a few more adjustments to the filter press, Bob Braddock declared the filter press was performing to the best of its ability, and was producing the optimal product it was capable of under the current conditions.

While this material was better than what they initially started with, it was still too wet to be successfully briquetted without some form of thermal drying taking place.

A decision was reached that afternoon to process additional material through the filter press on Monday July 24th and deposit it into wind rows, which it was hoped would provide additional drying opportunity for the material and allow for a more successful briquetting experience. They anticipated letting the material dry in the wind rows for approximately one day, making it Tuesday before they were ready to process any additional material through the briquette press.

Monday July 24, 2000

I contacted Bob Braddock at approximately 10:00 AM to inquire whether or not they would require any assistance in briquetting any additional material that day. He informed that they were continuing with the plan to place material into wind rows and that they did not plan to make any briquetting attempts for the remainder of that day.

Upon hearing that information, I proceeded with my travel plans and returned to Pocatello.

Should you have any questions about the events outlined above, or which to discuss any of the observations, please feel free to contact me.

Sincerely,

Michael Patterson

FFE MINERALS

FFE MINERALS USA INC.

A member of the F.L. Smidth-Fuller Engineering Group
3235 Schoenersville Road • P.O. Box 810 • Bethlehem, Pennsylvania
Telephone: 610-264-6900 • FAX: 610-264-6996

PIILOT PRODUCTION OF LIGHTWEIGHT AGGREGATE FROM DREDGED MATERIAL

FINAL REPORT

PREPARED FOR

JCI / UPCYCLE ASSOCIATES, LLC
BOSTON, MASSACHUSETTS

PROJECT #: 0-56527-865-02-30
JUNE 2001

Approved By:
W.E. Lindquist
Manager
Research & Development

Written By:
M.E. Prokesch
Sr. Project Engineer-Pyroprocessing
Research & Development

TABLE OF ABBREVIATIONS

APC:	Air pollution control
ASTM:	American Society for Testing and Materials
BD:	Bulk density (loose fill)
Btu/gal:	British thermal units per US gallon
Btu/lb:	British thermal units per pound
°C:	Degrees Celsius
cf:	Cubic foot
%comb:	Percent combustibles
dP:	Differential pressure
FAC:	Fuller Air Compliance
fps:	Feet per second
gr/dscf:	Grains per dry standard cubic foot
hp:	Horsepower
hr:	Hour
I.D.	Induced draft
lb:	Pound
lb/cf:	Pounds per cubic foot
lb/hr:	Pounds per hour
lb/st:	Pounds per short ton
lwa:	Lightweight aggregate
MMBtu/st	Million British thermal units per short ton
n/a:	Not available
ppm:	Parts per million
rpm:	Revolutions per minute
scfm:	Standard cubic feet per minute @ 70°F/1 atm
SS:	Stainless steel
st:	Short tons
stph:	Short tons per hour
stpy:	Short tons per year

OBJECTIVES

General objectives of this test and development program are as follows:

- To demonstrate at the pilot scale that dredged material can be converted to a quality lightweight aggregate product.
- To provide test data upon which to base the engineering design for a commercial-scale lightweight aggregate production facility.
- To serve as a key component of an R&D program being undertaken by JCI/Upcycle to support permit applications for the commercial lightweight aggregate process.

The specific technical objectives of this test and development program are as follows:

- To demonstrate the adequacy of the equipment planned for drying, extruding and rotary kiln operations.
- To quantify air emissions for the design of required air pollution control (APC) systems to satisfy regulatory requirements.
- To determine production and energy consumption rates for the full-scale plant.
- To collect sufficient data for FFE Minerals to offer process guarantees for the full-scale kiln system.

BACKGROUND

JCI/UPCYCLE Associates, LLC has been awarded a contract from the New Jersey Department of Transportation, Office of Maritime Resources, to perform a sediment decontamination pilot project to demonstrate the efficacy of its technology to beneficially use dredged material as a feedstock for the manufacture of lightweight aggregate.

The processing of the dredged material will occur in two major steps, the first being the pre-kiln processing step to be completed in New Jersey at the dredging site, (Stratus Petroleum, Newark, NJ), and the second being the kiln processing step to be completed at FFE Minerals, Catasauqua, PA. A complete description of the kiln processing step including material and gas sampling protocols is included in the following document: "Test Program for the Sediment Decontamination Project", Revision 004, submitted by FFE Minerals to JCI/Upcycle Associates LLC on 28Mar01. This document is included in the Appendix of this report.

The pre-kiln processing step completed in Sep00 included debris removal, initial sizing, dewatering and the full characterization, including bulk sediment chemistry, of both the as-dredged material and the dewatered filter cake solid. This work was supervised by JCI/Upcycle Associates, and a sample of the final dewatered dredge filter cake was shipped to Fuller Company's Research Facility to support the kiln processing step.

A laboratory study was performed in Oct00 using the dewatered filter cake solid prepared in Sep00. This laboratory study was performed for JCI/Upcycle Associates LLC to evaluate the feasibility of producing a quality aggregate from dredge filter cake. A sample of shale fines from the Lehigh Portland Cement lightweight aggregate facility in Woodsboro, Maryland was also supplied for use as an admixture if required to optimize the properties of the dredge-based aggregate and ensure the production of a quality, marketable lightweight aggregate product.

The laboratory study demonstrated the capability of producing a lightweight aggregate from a feedstock containing 70-100% dredge filter cake without the addition of organic bloating enhancing agents. Upon considering a number of process, economic and market factors, a feed mix containing 70% dredge filter cake and 30% ground shale fines (dry basis) was recommended for the pilot rotary kiln study to support the production of a high-quality lightweight aggregate with properties satisfying all applicable ASTM specifications. A preliminary pilot rotary kiln test did successfully demonstrate the production of a lightweight aggregate with a density of 34 lb/cf from an extruded pellet feed containing 70% dredge filter cake and 30% ground shale fines.

The following test report was prepared for JCI/Upcycle covering the Phase 1 laboratory study: "Laboratory Evaluation of Lightweight Aggregate Production from Dredge Filter Cake (Phase 1-Laboratory Study)", Oct00. A copy of this report is included in the Appendix.

Based on the success of the laboratory study, the pilot rotary kiln program was scheduled for dates of 13-17Mar01. This program included the rotary kiln production of lightweight aggregate and solid/gas sampling as specified in the Test Program document, and is the main focus of this final test report. Mr. Jay Derman of JCI/Upcycle Associates was present to observe the program in its entirety. The following personnel were present to observe a portion of the kiln program: Ms. Lisa Baron, Maritime Specialist-Technology Programs, of New Jersey Maritime Resources, Mr. Scott Douglas, Maritime Specialist-Dredging Programs, of New Jersey Maritime Resources, Mr. Huan Ed Feng, Assistant Professor, Montclair State University, Mr. Keith Jones, Senior Physicist, Brookhaven National Laboratory, and Mr. Eric Stern, Regional Contaminated Sediment Program Manager, U.S. Environmental Protection Agency.

EQUIPMENT

The following pilot systems were utilized to support this test program: hammermill dryer, extruder and rotary kiln. Descriptions of each system are included below.

Pilot Hammermill Dryer System: A schematic of the hammermill dryer system is provided in Figure 1. This schematic includes all primary components of the hammermill system including air heater, hammermill, feed circuit and baghouse, and indicates points of data acquisition.

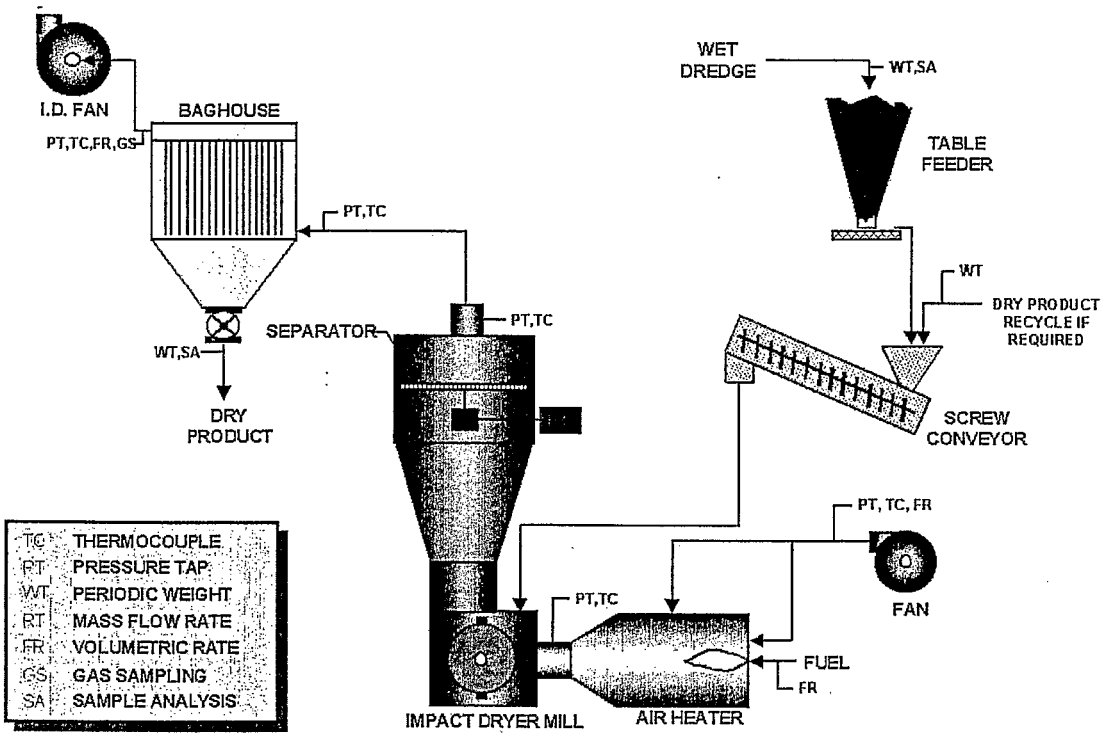

Figure 1: Pilot Hammermill Dryer System Schematic

The GP-1518 impact dryer mill unit includes a rotor containing thirty-six (36) wear resistant hammers. The rotor is spun at 4300 rpm by a 40 hp motor coupled via a belt-drive. Hot air generated by a direct-fired combustion chamber enters the mill near the bottom of the rotor. The feed stream is added at this same location via a screw conveyor. A high-pressure fan provides the air input to the combustion chamber, and the flow is measured using an averaging pitot tube.

The material is dispersed into the gas stream by the high-speed rotor, and the material laden gas passes through the rotor and up to a dynamic separator. The speed of the dynamic separator may be adjusted between 30-300 rpm to control the particle top size. Particulate and gas passing through the separator are directed to a jet pulse baghouse for product collection and then to an I.D. fan. The fan is adjusted to maintain a neutral static pressure at the mill gas inlet location.

The wet dredge filter cake feed rate is controlled using a variable-speed table feeder. The cake discharges into a pug mill mixer, where dry product is added via a variable-speed screw feeder. The two materials are blended in the pug mill to improve the flow properties of the cake before it enters the screw conveyor and mill. The filter cake feed rate is determined by monitoring the weight and

addition rate of filter cake to the feeder. The dry product recycle rate is determined using a screw calibration curve. The production rate from the mill is determined using product weight and time data.

Gas temperatures are recorded using calibrated Type-K thermocouples. Static pressures are monitored using U-tube manometers and recorded using calibrated pressure transducers. Thermocouple, pressure transducer and gas analyzer outputs are monitored and recorded every 60 seconds by a data acquisition system. The natural gas input to the combustion chamber is measured using a calibrated rotameter.

The mill system emissions are measured at the baghouse outlet location. In addition to the sampling performed by FAC, FFE Minerals performed continuous analysis to determine the concentrations of NO_x, SO_2, CO, CO_2 and O_2. A Rosemount MLT4 analyzer was utilized for determining the concentrations of NO_x, SO_2, CO and O_2. A Siemens Ultramat 23 was utilized for determining the concentration of CO_2. The sample gas for both analyzers was drawn through a heated line followed by a gas conditioner for particulate and moisture removal.

Pilot Extruder: The pilot extruder used to produce the pellet feed for the test program is a 4" Terrier Auger-type unit manufactured by the Bonnot Company. The unit is driven by a variable-speed Reeves 5 HP 220v/3ϕ motor (13.6 amps) with a 36.3:1 gear reducer. The final output speed is in the range of 23.8-71.7 RPM. A Simpson 0-25 amp meter indicates the motor power draw. Material is hand fed to the open 8" diameter, 29" long mixing section containing a pug-type mixing assembly. The mixing paddles are orientated to move the material to the compression zone during the mixing process. The material is collected by the screw flights in the 14" long compression zone, and then compressed as the chamber diameter is reduced from 8" to 4". A 7/8" thick die plate is bolted to the discharge of the compression zone. The material is forced through (16) ½" diameter holes in the die plate, and then the emerging extrusions break off against a stop plate to a length of 1-2".

1' x 15' Pilot Rotary Kiln System: A schematic of the pilot rotary kiln system is provided in Figure 2. This schematic includes all components of the pilot kiln system, and indicates temperature and pressure monitoring locations.

The 1'x15' rotary kiln is formed from a 21" diameter carbon steel cylinder 15' in length, and lined with 4.5" of a high alumina (70% Al_2O_3) refractory brick to provide an inside diameter of 12". Two riding rings and accompanying trunnion rollers provide support of the kiln shell. A thrust roller positioned on the discharge end side of the drive sprocket restricts kiln movement in the horizontal plane. The roller also prevents excessive contact pressure at the carbon block seals located at both ends of the shell. These seals include a carbon block ring attached to the stationary hoods, and a spring-loaded seal plate supported by the kiln shell.

The kiln is chain driven by a 15hp motor coupled to a 6:1 variable speed reducer unit. The final output speed range offered by the drive provides for a kiln speed range of 0.45-2.7 RPM. The kiln frame pivots about the feed end to permit adjustment of the kiln slope, up to a maximum slope setting of 0.8"/ft. The slope was set and maintained at 0.5"/ft for the pilot program.

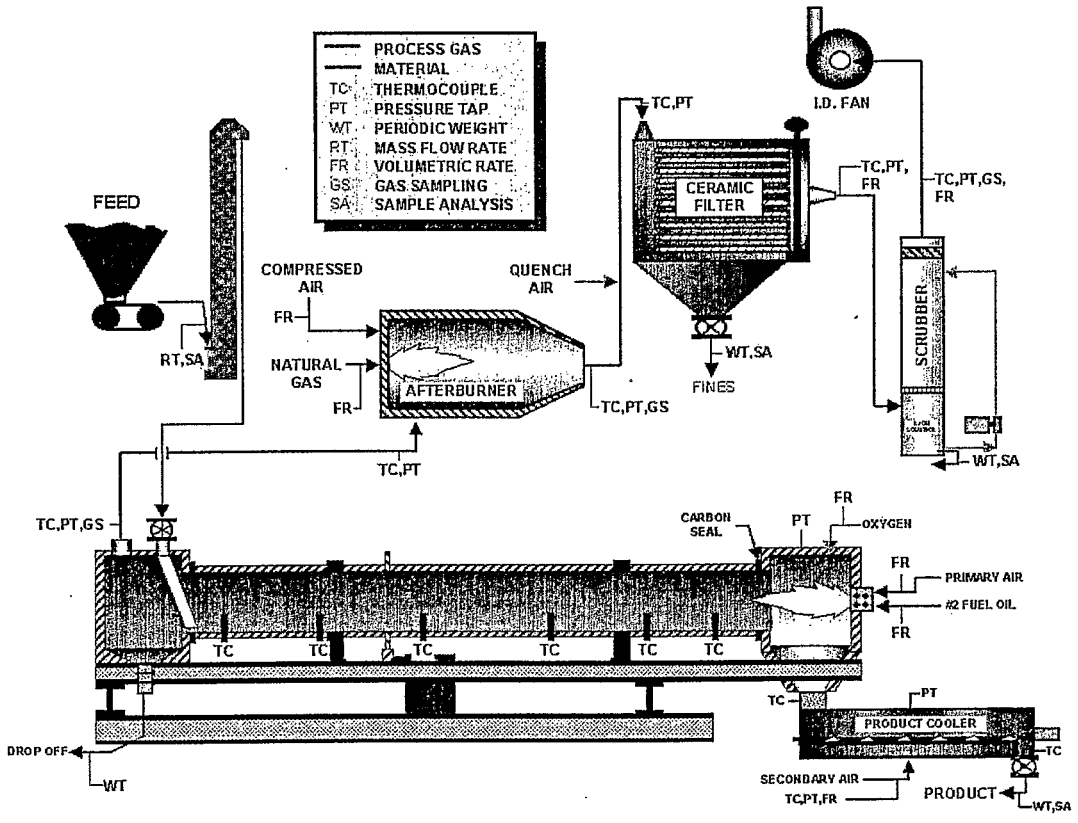

Figure 2: 1' x 15' Pilot Rotary Kiln System

A North American dual fuel burner (Model #6422-6) configured for the combustion of #2 fuel oil is utilized for combustion control. The burner incorporates a natural gas pilot assembly. Primary air for combustion is divided into two streams. The first stream serves as atomizing air for the pilot assembly, and the second stream is directed through the main burner chamber. The total primary airflow is measured using a 2" averaging pitot tube. Secondary preheated air from the cooler enters the kiln through the bottom of the firing hood. The flow rate of secondary air is measured using a 2" averaging pitot tube.

The maximum hot zone temperature is determined by two calibrated devices: a hand-held Raytek Raynger 3I Series infrared thermometer and a platinum thermocouple located 24" from the firing end of the kiln shell. The infrared

reading is taken through a 3" diameter quartz sight glass located on the firing hood.

A kiln process gas temperature profile is generated by data provided by six calibrated platinum thermocouples positioned at points 24", 43", 67", 105", 141' and 165" from the kiln discharge end. These thermocouples extend approximately 4" into the kiln interior. As previously mentioned, the thermocouple at the 24" position is utilized as an indication of the maximum process gas temperature, and its output used as the control point. A calibrated Type K thermocouple positioned inside of the feed hood, immediately outside the kiln shell indicates the kiln outlet gas temperature. Pressure taps are located in the firing and feed hoods.

The process gas stream is drawn from the kiln through an 8" diameter 316SS vertical gas sampling duct. This duct was fabricated to facilitate kiln off gas stream gas sampling and flow measurements. The exit flow from the gas sampling duct enters a natural gas-fired afterburner. The position of the gas inlet directs the kiln off gas stream through the natural gas flame to combust carbon monoxide and organic volatiles present. Additional air is added to the afterburner to support combustion of the natural gas and off gas combustibles. Air and natural gas flow rates are indicated by calibrated rotameters. The afterburner gas inlet and outlet temperatures are indicated by calibrated Type K thermocouples. Static pressure taps are located at the gas inlet and outlet locations.

The afterburner off gas stream is pulled through a filtering device containing 144 ceramic filter elements. This filter offers a maximum operating temperature of 950°F, and operates with a row jet pulse cleaning circuit. Ambient air is drawn into the system just downstream of the afterburner through an adjustable damper to control the filter inlet temperature. Fines collected in the filter are discharged through slide gates valves, collected in a metal bucket and periodically weighed. Pressure and temperature are monitored at the inlet and outlet of the filter.

The filtered gas is finally drawn through a wet scrubber for acid gas neutralization and final pollutant removal. The wet scrubber includes an automatic pH control utilizing a 50% solution of sodium hydroxide, circulating pump, packed bed, spray nozzle and de-mister. The total gas flow rate entering the scrubber is measured using a 6" averaging pitot tube. The process gas stream is drawn from the scrubber through a 8" diameter 316SS vertical gas sampling duct. This duct was fabricated to facilitate scrubber off gas stream gas sampling and flow measurements. The exit flow from the sampling duct is directed to an I.D. fan and damper system used to control pressure conditions within the kiln. The scrubber outlet gas temperature is monitored using a calibrated thermocouple.

The feed material is weighed using a calibrated scale before it is added to the feeder bin. The kiln feed rate is controlled using a variable speed belt conveyor

positioned under the feed bin. This feeder sits on top of a 500 pound capacity platform scale utilized to monitor and record the material inventory in the feed bin. The feed pellets drop into a bucket elevator, the elevator lifts the material to a height of 12', and then the material is discharged through a 4" diameter rotary valve and into the kiln. The use of a belt feeder minimizes material degradation in the feed delivery circuit. The feed rate is calculated by monitoring the change in bin inventory weight indicated by the platform scale.

A 1" tall retaining ring is attached to the feed end of the kiln shell to minimize material dropout. Dropout that does collect in the feed hood is discharged through a manually operated slide gate assembly and weighed.

Product discharges from the kiln and drops into a 6" x 3' stainless steel cross bar cooler. An adjustable speed reciprocating shaft containing five pusher assemblies transports the material through the cooler to the discharge port. Cooled material discharged from the cooler passes through dual slide gate valves and enters a stainless steel collection pan. Air injected into the cooler plenum is distributed across the cooler using an air distribution plate. The air proceeds to pass through the bed of aggregate and then enters the bottom of the kiln firing hood. Temperatures are monitored at the following locations: plenum, product discharge, and preheated air at the firing hood inlet. Pressures are monitored in the plenum and freeboard areas.

Rotary kiln shell temperatures are measured using a Raytek Raynger MX4 infrared thermometer. The emissivity is set to 0.9 for all readings.

The kiln process emissions are measured at the kiln exit and scrubber exit locations. In addition to the sampling performed by FAC, FFE Minerals performed continuous analysis at both locations to determine the concentrations of NO_x, SO_2, CO, CO_2, O_2, THC and CH_4. Both sample trains included a Rosemount MLT4 analyzer for determining the concentrations of NO_x, SO_2, CO and O_2, a Siemens Ultramat 23 for determining the concentration of CO_2, and a JUM 109A hydrocarbon analyzer for determining the concentrations of total hydrocarbons and CH_4. The sample gas for both sets of analyzers were drawn through separate circuits including a heated line followed by a gas conditioner for particulate and moisture removal. The gas sample for the hydrocarbon analyzer was bypassed around the conditioner.

All static pressure locations are connected to U-tube manometers and pressure transducers. Thermocouple, pressure transducer and gas analyzer outputs are monitored and recorded every 60 seconds by a data acquisition system.

PROCEDURE

The following samples were provided by JCI/Upcycle Associates LLC for the test program:

- Dredge Filter Cake: Lab #200914 8,000 lb.
- Shale Fines: Lab #200925 4,600 lb.

The 8,000 pounds of dredge filter cake collected from the Stratus Petroleum site in Newark, New Jersey were received in twenty 55-gallon drums on 05Sep00. A 5 gallon composite sample was collected from the twenty drums and submitted for physical (particle size distribution, moisture and bulk density), chemical (complete oxide analysis, organic carbon, sulfide sulfur and chlorides) and lab emission analyses. The 4,600 pounds of shale collected from the Lehigh Portland Cement lightweight aggregate facility located in Woodsboro, Maryland were received in eight 55-gallon drums on 18Sep00. A grab sample of the shale was subjected to the same analyses specified for the dredge sample. The results of these analyses are included in the Phase 1 laboratory test report in the Appendix. Approximately 1,500 pounds of the dredge filter cake were utilized to support the Phase 1 laboratory work and kiln shakedown testing performed in Oct00.

Hammermill Dryer Operation – 28Feb01:
The unit was cleaned on 27Feb immediately followed by drying and milling of the 4,600 pounds of shale fines. The FFE Minerals gas analysis equipment was setup and operation checked during this operation. FAC arrived on site at approximately 1500 hr and proceeded to setup for sampling at the mill baghouse outlet location.

The air heater on the mill system was ignited at 0620 hr on 28Feb and the system was preheated using a total airflow of 1000 scfm. During this preheat period, the FFE Minerals analyzers were calibrated and placed on line. The table feeder was turned on at 0810 hr and set to deliver 500 lb/hr of dredge filter cake to the mill. In addition, the recycle feed screw was turned on at 0812 hr and set to deliver 250 lb/hr of dry product to the pug mill. This dry product was prepared on 27Feb01.

Following the start of the feeders, the mill inlet gas temperature was adjusted to maintain a temperature of 80-90°C at the mill exit. Adjustments to the inlet temperature were made more or less continuously throughout the remainder of the mill operation. The dry recycle rate was increased to 350 lb/hr at 0828 hr to improve the flow properties of the material entering the mill.

The feed systems were stopped at 0900 hr due to a broken valve on the baghouse discharge cone. This was replaced and then the feeders were restarted at 1011 hr. Feed stoppages were required at 1040 hr due to a compressor outage and at 1115 hr due to a blockage at the mill inlet. Problems with blockages at the mill inlet continued until 1350 hr.

An increase in the dry recycle rate to 500 lb/hr improved material flow in the mill. Stable operation was maintained until 1708 hr. At this time, a loss of dry recycle

flow allowed wet filter cake to enter the mill. This stopped the mill rotor. The mill was cleared and the system restarted at 1743 hr. Several adjustments were made to the burner at this time to eliminate the high levels of CO emitted earlier in the day.

FAC completed gas sampling at 2130 hr. The airflow and feed rate to the mill were increased in order to maximize capacity. The mill system was shutdown at 2245 hr after all dredge material was processed. No deposits were found when the system was shutdown and later inspected.

Pilot Rotary Kiln System Operation:

The 1' x 15' pilot rotary kiln system and instrumentation were setup as described in the Equipment section of this report. Flow rates, material weights, temperatures, pressures and emission concentrations were determined using calibrated instrumentation. Weight, temperature, pressure and gas analysis data were recorded in 60 second increments using the data acquisition equipment. A log was maintained to record observations and system adjustments made during pilot testing. System startup and sampling were performed as described in the Project Outline included in the Appendix.

Phase 1: 0807 hr – 0750 hr, 13-14Mar01

Objective: Determine the kiln operating conditions required to produce a lightweight aggregate product with a bulk density in the range of 35-40 lb/cf, and then stabilize kiln and afterburner operation.

The kiln system was started at 0040 hr following the procedure detailed in the Project Outline (see Appendix). The system was preheated for a period of approximately six hours while flow adjustments were made and the gas analyzers were calibrated. Oxygen was injected into the firing hood to maintain an acceptable oxygen concentration (>8%) at the kiln exit. The belt feeder was started at 0807 hr and set to deliver 40 lb/hr of feed pellets to the process.

The maximum kiln temperature was gradually increased while the product was inspected for signs of bloating. A small degree of bloating was observed at 0908 hr. A product with a bulk density of 30 lb/cf was produced at 0949 hr using a temperature of 1140°C. The target temperature was reduced to 1130-1135°C in an attempt to minimize the agglomeration that began to occur at 1140°C.

An upset in the kiln temperature profile was accompanied by balling and ringing beginning at 1120 hr. A number of temperature adjustments made over the next two hours were not successful in reducing agglomeration while maintaining the target product density of 35 lb/cf. Airflow adjustments were made to the burner to obtain a tighter, more radiant flame. These adjustments were successful in reducing the degree of ringing in the kiln. The product density at this time was approximately 40 lb/cf.

Shell cooling fans were added at 1708 hr. This was done in an attempt to reduce the lining hot face temperature and reduce ringing. Some improvement was noted after the addition of three cooling fans.

The kiln speed was increased to 1.5 rpm at 1911 hr. However, before the effect of this change could be realized, the bucket elevator belt failed. The kiln was idled at temperature while repairs were made. The elevator was repaired at 0122 hr on 14Mar and the feed system restarted.

The ringing observed previously continued after the kiln restart. The kiln speed was reduced to 1.2 rpm at 0740 hr as the higher speed did not indicate any improvement. The speed was later increased to 1.8 rpm (0940 hr), and this speed was maintained until the conclusion of the test program. The process flows were stable in preparation for the start of emission testing by FAC at 0750 hr.

Phase 2: 0750 hr – 0545 hr, 14-16Mar01

Objective: Maintain stable kiln system operation and perform material and gas sampling as specified in the Test Program document.

At 0955 hr it was observed that the kiln airflow had decreased. An adjustment was made at this time to obtain the desired air flow rate. FAC was notified of this adjustment, and it was agreed that it did not effect the tests in progress.

The feed pellets were screened to remove minus ¼" fines beginning at 1410 hr. This was performed in an attempt to reduce the fines loading in the hot zone and the potential for ringing. Some improvement was observed.

Minor adjustments to the hot zone temperature were made to control product density during the program. In addition, minor adjustments were made periodically to the feed belt speed to maintain a feed rate of 40 lb/hr. No significant modifications were made until the conclusion of emission testing performed by FAC.

All power to the kiln 110v power supply circuit was lost at 1727 hr. This effectively shutdown all emission tests in progress and stopped the feed system. All tests in progress at the time were continued at 1812 hr when the feed system was re-started. FAC completed all testing by 0545 hr on 16Mar.

Phase 3: 0545 hr – 0300 hr, 16-17Mar01

Objective: Maximize kiln production and process all remaining feed pellets. Adjust conditions as required to produce a lightweight aggregate product with a bulk density in the range of 35-40 lb/cf, and then stabilize kiln and afterburner operation.

The feed rate was increased to 60 lb/hr at 0607 hr. A further increase to 70 lb/hr was made at 0803 hr. The increased rate led to a cooler failure at 1546 hr. After this point, all product was discharged from the kiln directly into containers. A maximum feed rate of 85 lb/hr was established by 1947 hr and maintained until all feed was processed at 0203 hr on 17Mar. A stable kiln temperature profile was maintained while the kiln load was discharged while the off gas stream was monitored for carbon monoxide and sulfur dioxide. These values stabilized at 0400 hr to indicate the baseline emission levels from the burner only.

The kiln was shutdown at 0402 hr. The scrubber inventory was drained and all samples were weighed.

RESULTS & DISCUSSION

This test program was performed to demonstrate the feasibility of producing lightweight aggregate from harbor sediment in accordance with the procedures outlined in the following document submitted by FFE Minerals to JCI/Upcycle Associates LLC on 28Mar01: "Test Program for the Sediment Decontamination Project", Revision 004. This document is included in the Appendix of this report. Tables 1 and 2 in this document outline solids and gas sample analyses and methods applied during this program.

A laboratory study was performed in Oct00 using the dewatered filter cake solids prepared by JCI/Upcycle Associates and supplied to FFE Minerals in Sep00. The study successfully demonstrated the production of a lightweight aggregate from a feedstock containing 70-100% dredge filter cake (dry basis) without the addition of organic bloating enhancing agents. As bloating agents were not required in the lightweight aggregate process, the analyses of bloating agents as specified in Table 1 of the Test Program document were not performed.

Upon considering a number of process, economic and market factors, a feed mix containing 70% dredge filter cake and 30% ground shale fines (dry basis) was recommended for the pilot rotary kiln study to support the production of a high-quality lightweight aggregate with properties satisfying all applicable ASTM specifications. The following test report was prepared for JCI/Upcycle covering the Phase 1 laboratory study: "Laboratory Evaluation of Lightweight Aggregate Production from Dredge Filter Cake (Phase 1-Laboratory Study)", Oct00. A copy of this report is included in the Appendix.

The laboratory test report includes moisture, bulk density, particle size distribution and complete chemical oxide analyses of the "as received" dredge filter cake and shale fines (Tables 1, 2 and 3, and Figure 10). The shale fines were also analyzed for total organic carbon and halogens, and these results are included in FAC's report.

The "as received" dredge filter cake and shale fines were separately dried and ground to minus 100 mesh using an air-swept hammermill dryer system. This

drying/sizing operation was required to produce fine, free-flowing materials that could then be homogenized and extruded. The Equipment section of this report includes a description of the pilot hammermill dryer circuit. A full page schematic of the hammermill dryer system is included in Figure 31 in the Appendix.

A total of 4,587 pounds of shale fines containing 8.05% free moisture were ground in the hammermill system to produce 3,986 pounds of shale with a moisture level of 0.51%. The shale product from the hammermill system was 97.5% passing 100 mesh (150 microns) with a bulk density of 42.8 lb/cf. See Table 9 in the Appendix for a material balance covering shale processing in the mill system and Figure 8 in the Appendix for a complete laser particle size distribution of the ground shale.

The "as received" dredge filter cake (6,504 pounds, 80.8 lb/cf) with a free moisture level of 57% was dried to produce 2,497 pounds of free-flowing material with a moisture level of 4.43% (bulk density=36.5 lb/cf). Due to the sticky nature of the "as received" filter cake, mill product collected from the baghouse was mixed into the filter cake to obtain a material consistency suitable for the mill operation. A recycle rate equivalent to about 100% of the dredge filter cake feed rate was required to produce a free flowing mix (BD=56.7 lb/cf, 25-30% free moisture) that did not promote buildup in the mill. Higher mix moisture levels utilized early in the test resulted in mill inlet chute plugging. The use of product recycle would be recommended for the commercial mill system to limit the potential for material flow and coating problems.

Table 10 in the Appendix includes a material balance for the dredge filter cake drying operation. The dry balance differential is associated with material losses in the feed circuit, baghouse and during handling. Figure 9 in the Appendix includes a complete laser particle size distribution for the dried dredge filter cake (98.1% passing 100 mesh).

The target hammermill operating conditions for drying the dredge filter cake were as follows: 1000 scfm air input, 500 lb/hr dredge filter cake feed rate and 80-90°C mill outlet gas temperature. The mill outlet temperature was controlled by adjusting the inlet gas temperature. Previous work has shown that operation with a mill outlet temperature of 80-90°C will minimize the potential for carbon monoxide and hydrocarbon emissions from dredge material. Table 11 in the Appendix includes a summary of operating data recorded during the drying of the dredge filter cake, and includes data recorded during milling of the shale fines. Figure 10 includes complete temperature and pressure profiles for the period of dredge filter cake drying. See Table 12 in the Appendix for an operating log.

The hammermill off gas was analyzed at the baghouse exit location as specified in Table 2 of the Test Program document. A final arrangement was made with FAC where FAC would determine and report the emission of SO_2, NO_x, CO_2, O_2, CO and total hydrocarbons. FFE Minerals continued to analyze for SO_2, NO_x,

CO_2, O_2, and CO on a continuous basis for the sole purpose of developing an emission profile for the duration of the mill operation (see Figure 11 in the Appendix). The data collected by FFE Minerals is not utilized to determine emission rates from the hammermill dryer process.

The FFE Minerals emission profile shows a high CO concentration in the mill off gas up to 1750 hr, at which time the CO concentration was reduced from an average of approximately 100 ppm to <10 ppm. This reduction was obtained by adjusting air distribution to the air heater burner to improve combustion conditions in the primary burning zone – no other process adjustments were performed. Based on this observation, the first set of emission tests performed by FAC prior to 1750 hr is not representative of the total emissions from the process in terms of CO, VOC and NO_x emissions. The second set of emission data is considered representative of the emission rates of these components from the hammermill process.

The hammermill dryer flow rate and composition data was collected by FAC and is included in their report. Utilizing the second set of data from the period of 1826-2126 hr, 28Feb, the following emission rates are calculated per ton of dredge filter cake processed and per ton of lightweight aggregate to be produced:

Table 1: Emission Rates - Hammermill Dryer System

	lb/hr	lb/st dredge	lb/st LWA
SO2	<0.01	<0.036	<0.067
NOx	5.00E-02	1.82E-01	3.33E-01
CO	6.00E-02	2.18E-01	4.00E-01
VOC	3.00E-02	1.09E-01	2.00E-01
PCDD/PCDF (TEQ)	1.13E-12	4.11E-12	7.53E-12
Particulate	1.40E-01	5.09E-01	9.33E-01
Hg	<1.5E-06	<5.45E-06	<1.00E-05

The emission rates calculated above are based on a dredged filter cake feed rate of 0.275 stph, a corresponding lightweight aggregate production rate of 0.150 stph. The factor utilized to determine corresponding aggregate production is described later in this report. It should be noted that the commercial hammermill dryer process will utilize waste heat from the kiln and afterburner circuit and, therefore, will not contribute to final NO_x emissions. A portion of the CO and VOC emissions from the hammermill dryer process may have been contributed by the burner and therefore overstate estimated annual emissions.

The high particulate emissions from the drying process (0.013 gr/dscf → 98% collection efficiency) are attributed to the condition of the filter bags in the pilot baghouse. A commercial baghouse would typically provide a particulate collection efficiency of >99.9%.

A pelletized feed was produced for the rotary kiln system using an extrusion process. The feed pellet preparation included (1) blending dried dredge filter cake and shale using the ratio determined from the laboratory study, (2) adding water to increase the blend moisture level to approximately 15%, (3) extruding the blend to produce ½" diameter x 1-2" long pellets, (4) and then passing the pellets through the extruder a second time to maximize green strength. A total of 4,119 pounds of pellets were produced demonstrating acceptable green strength. The use of an extruder for pellet formation is recommended for the commercial system.

The rotary kiln program was performed during the period of 13-17Mar01. Total lightweight aggregate production during the program amounted to 3,084 pounds. Process adjustments were performed primarily on 13Mar in an attempt to produce a lightweight aggregate with a bulk density in the target range of 35-40 lb/cf. Minor adjustments were completed the morning of 14Mar, and then stable operating and flow conditions were maintained until the conclusion of emission testing by FAC personnel at 0545 hr on 16Mar. Kiln capacity was then increased and the processing of all feed pellets completed by 0300 hr on 17Mar.

A Project Outline describing kiln startup, operation, data collection and sampling procedures is included in the Appendix. Copies of the operating log are included in Table 13 - Table 21 in the Appendix. The Equipment section of this report includes a description of the pilot rotary kiln system. A full page schematic of the rotary kiln system is included in Figure 32 in the Appendix.

Average kiln operating conditions utilized during the period of gas sampling performed by FAC (Phase 2) are included in Table 5-Table 6. These conditions supported the production of a lightweight aggregate product with an average bulk density of 37.95 lb/cf. The overall average product bulk density level for the program was 37.59 lb/cf. See Table 22 - Table 24 in the Appendix for bulk density data. Minor ringing and agglomeration were observed throughout the program, and are attributed to the small size of the kiln burning zone and the generation of hot spots. Attempts to reduce the bulk density to <35 lb/cf during Phase 1 via temperature and material residence time adjustments were accompanied by increased ringing and agglomeration.

Graphs of the kiln system temperature, pressure and emission profiles (kiln exit and scrubber exit locations) for 15Mar are included in Figure 3-Figure 6. Similar graphs for remaining test days are included in Figure 12-Figure 27 in the Appendix. See Table 25 - Table 40 in the Appendix for all kiln operating data recorded by operating personnel during the program. The emission profiles were generated using data collected by FFE Minerals personnel. This data is not utilized for emission rate calculations. All emission rate calculations are performed utilizing emission data collected by FAC.

A complete material balance covering the rotary kiln operation is included in Table 7. The balance differential on a loss-free basis is –1.90%. The following production balance is derived from the material balance after accounting for the loss-free differential: processing 1 short ton feed pellets = 0.7631 short ton lightweight aggregate product + 0.0026 short ton ceramic filter fines + 0.2343 short ton losses (water + chemical losses).

Based on the kiln system material balance, it is estimated that one short ton of dredge material filter cake containing 57% moisture will yield 0.546 st lightweight aggregate. This correlation was determined by placing one short ton of dredge material filter cake on a dry basis (0.43 st dry dredge), adding 30% shale to produce 0.614 st dry mix, extruding the mix with 14.3% moisture to produce 0.716 st of feed pellets, and then applying the pilot kiln production balance to obtain a lightweight aggregate quantity of 0.546 st.

Physical and chemical analysis of composite feed, kiln product, ceramic filter fines, fuel oil, scrubber liquor and scrubber water samples were performed by FFE Minerals and York Analytical Laboratories as per requirements stated in the Test Program document, Table 1. Individual samples collected by FFE Minerals during the period of emission testing as performed by FAC were supplied to York Analytical Laboratories who, in turn, prepared composite samples representing the following time periods:

1. 0800-0730 hr, 14-15Mar
2. 0800-0600 hr, 15-16Mar
3. 0800-0600 hr, 14-16Mar

Portions of these composite samples were returned to FFE Minerals to facilitate specified analyses FFE Minerals' laboratories. Analyses performed by York Analytical for FAC are included in FAC's report.

Physical analyses, including moisture, bulk density and free moisture data, performed by FFE Minerals on the feed pellets are included in Table 41 - Table 43 in the Appendix. In general, the feed pellets are characterized as follows: 14% free moisture, 70 lb/cf bulk density and ¾" x 3/8" particle size range. Chemical analyses performed on the feed pellets are included in Table 44 - Table 46 in the Appendix.

Physical and chemical analyses of the kiln product samples performed by FFE Minerals are included in Table 47 - Table 52 in the Appendix. The product particle size was generally ¾" x ¼" with a bulk density of 40 lb/cf. In addition to the analyses reported in Table 47 - Table 52, the product samples were analyzed to determined crushing strength and moisture absorption by FFE Minerals. Results of these tests are as follows:

1) Kiln Product, 0800-0730 hr, 14-15Mar:
   a) >210 lb average crushing strength
   b) 10.31% moisture absorption
2) Kiln Product, 0800-0600 hr, 15-16Mar:
   a) >219 lb average crushing strength
   b) 10.79% moisture absorption
3) Kiln Product, 0800-0600 hr, 14-16Mar:
   a) >213 lb average crushing strength
   b) 10.43% moisture absorption

The results stated above are considered very good in terms of crushing strength. The crushing strength values exceed many commercial lightweight aggregates currently on the market. The moisture absorption levels are below the generally accepted maximum level of 15-20%.

A sample of kiln product was crushed and sized (vibrating screen and jaw crusher circuit) to obtain a gradation meeting ASTM's specifications for a ¾" x No. 4 structural lightweight aggregate. This sample was sent to SOR Testing Laboratories in Cedar Grove, New Jersey for aggregate analyses as specified in ASTM C330 for structural lightweight aggregate. Results obtained by SOR are included in the report in the Appendix. This report indicates that the kiln product met all requirements of ASTM C330 except for the specification for gradation. The failure of the gradation to meet ASTM specifications is a function of how the aggregate was prepared by FFE Minerals. A commercial crusher (i.e. cone crusher) designed to produce a ¾" x No. 4 aggregate will ensure compliance with ASTM gradation specifications.

Physical and chemical analyses of the ceramic filter fines samples are included in Figure 28 - Figure 30 and Table 53 - Table 55 in the Appendix. The particle size of the ceramic filter fines was generally 100% passing 150 microns with a bulk density of 22 lb/cf.

A sample of the fuel oil supply used for the kiln burner was analyzed by FFE Minerals for density, ultimate analysis, chlorine, fluorine and gross heat value. These results are included in Table 56 in the Appendix. A net or low heating value of 18,414 Btu/lb (129,619 Btu/gal) is calculated using the gross heat value and hydrogen content.

Three scrubber liquor samples were analyzed by FFE Minerals to determine the concentration of total sulfur. Results are included in Table 57 - Table 59 in the Appendix. A total scrubber liquor inventory of 745.8 pounds was collected at the end of the program, and 3,356 pounds of water were added to the scrubber during the period of 0800-0500 hr, 14-16Mar corresponding to the scrubber samples analyzed.

A heat balance (see Table 8) was performed around the rotary kiln using operating data and measured shell temperatures collected at 0835 hr on 15May, and measured gas flow rates and compositions determined by FAC. A comparison of total heat in to total heat out indicates an imbalance of –1.2%. A summary of the heat load distribution includes: Shell heat flux=70.92%, off gas stream =19.53%, product stream =5.47%, fines stream =0.01% and reactions =4.07%. The reactions in the heat balance due not account for minor components such as sulfide oxidation or alkali volatilization.

The specific fuel consumption for the pilot rotary kiln was 15.58 MMBtu/st of product. This is considerably greater than the expected commercial kiln specific fuel consumption of 2 MMBtu/st due to a low material loading (3.2% of kiln volume vs 10-15%), high air/solids ratio (6.6 vs 1-2) and high shell heat flux (71% vs 5-10%) in the pilot kiln. The higher firing rate in the pilot system must be considered when estimating the emission of NO_x from the commercial process. The NO_x emission data from a commercial lightweight aggregate rotary kiln process with an allowance for NO_x contribution from the afterburner should be used.

Table 2 provides a summary of emissions across the kiln system's air pollution control circuit:

Table 2: Emission Summary - Rotary Kiln System

	Kiln Exit Emissions lb/hr	Scrubber Exit Emissions lb/hr	Reduction %
SO2	2.10E-01	9.33E-04	99.56%
NOx	1.80E-01	1.99E-01	-10.56%
CO	2.50E-01	2.07E-02	91.72%
VOC	1.40E-02	2.99E-03	78.64%
Total Particulate	1.80E-01	1.42E-02	92.11%
Hg	4.46E-05	1.71E-05	61.66%
PCB's	4.04E-06	5.23E-08	98.71%
PCDD+PCDF (TEQ)	5.34E-09	3.24E-11	99.39%
HCl	1.79E-01	6.44E-05	99.96%
Cr^6	2.77E-06	3.94E-07	85.78%

The reduction values refer to the change in contaminant levels across the kiln system air pollution control equipment. The pollution control circuit was comprised of a high temperature afterburner, particulate collection filter with ceramic elements and caustic wet scrubber. As the reduction values suggest, the process including the pollution control circuit was generally very effective at reducing pollutant levels. Higher reduction levels would be expected in the commercial process due to improved APC performance.

Table 3 provides a comparison of emissions from the pilot rotary kiln system to those reported from existing commercial operating lightweight aggregate plants (an average of 3 facilities):

Table 3: Emission Projections

	Pilot Kiln System Emissions lb/ton LWA	Hammermill Dryer Emissions lb/ton LWA	Total Pilot System Emissions lb/ton LWA	Typical Commercial Emissions lb/ton LWA
SO2	5.71E-02	<6.70E-02	<9.41E-02	4.40E+00
NOx	1.22E+01	3.33E-01	1.22E+01	2.26E+00
CO	1.27E+00	4.00E-01	1.67E+00	9.00E-01
VOC	1.83E-01	<2.00E-01	<3.83E-01	7.00E-02
al Particulate	8.70E-01	9.33E-01	1.80E+00	7.90E-01
Hg	1.05E-03	<1.00E-05	<1.06E-03	n/a
PCB's	3.20E-06	n/a	3.20E-06	n/a
CDD+PCDF	1.98E-09	2.47E-10	2.23E-09	n/a
HCl	<3.94E-03	n/a	<3.94E-03	1.46E-02
Cr^6	<2.41E-05	n/a	<2.41E-05	n/a

The projected commercial emission data in Table 3 includes contributions of SO_2, CO, VOC, total particulate, Hg and PCDD/PCDF from the hammermill dryer process. NO_x generated in the dryer system is excluded because the commercial dryer will use waste heat from the afterburner. Given the lower specific fuel consumption of the dredge-to-lightweight aggregate process (significantly lower NO_x formation) and better performance of commercial scale APC equipment (lower particulate, CO and VOC emissions), the emission levels from the commercial dredge-to-lightweight aggregate process are expected to be comparable to or lower than typical emission levels from conventional commercial lightweight aggregate kiln systems.

A sulfur balance was performed for the rotary kiln process and is included in Table 60 in the Appendix. The sulfur output distribution is as follows: kiln product = 77.32%, fines = 1.51%, scrubber effluent = 20.95% and off gas = 0.22%.

A schematic of the proposed commercial process configuration is included in Figure 7. The dredge filter cake and shale fines are metered into a mixing device to produce a homogenous feed for the dryer system. The mixed material enters a hammermill dryer system where it is dried to a moisture level of 5-10% and all agglomerates, coarse sand and aggregates are ground to minus 100 mesh. This dried, ground material is collected using a cyclone collector and a baghouse collector. A portion of this dried material is returned to the dryer feed mixer in order to reduce the moisture level in the dryer feed and improve flow properties of the material entering the hammermill.

The dried, ground material is directed to an extrusion circuit for pellet formation. The dried material is mixed with water (may be water from the dredge dewatering circuit – not shown) to obtain a mix moisture level of 15%. This moisture level is required to enable the production of strong pellets in the extruder. The wet mix is extruded to form cylindrical pellets, which are directed to the kiln feed bin or stockpiled for future processing.

The extruded pellets are fed to a conventional lightweight aggregate rotary kiln system. They pass through a preheat zone comprised of lifters and dams, and then expanded in the firing zone to produce lightweight aggregate. The aggregate is discharged from the kiln into a cooling device, which recovers heat for the kiln and significantly reduces the specific fuel consumption for the process. A portion of the preheated air may be directed to the afterburner to maximize afterburner efficiency. The cooled aggregate is crushed and screened to produce the target gradations, stockpiled and then delivered to market.

The kiln off gas is directed to the high temperature afterburner. Fuel and air are added to the afterburner to raise the gas temperature to about 900°C for CO and VOC destruction. The hot afterburner off gas is utilized in the hammermill dryer to support the drying heat load, filtered in the main baghouse and then directed to a scrubbing circuit for final pollutant removal.

The system is designed to enable kiln operation while the dryer is idle and, likewise, enable dryer operation when the kiln is idle. When the dryer is idle, the afterburner off gas is directed to a quench chamber where water is added to reduce the gas temperature to a level that is suitable for handling in the baghouse/scrubber circuit. When the kiln is idle, all heat for drying is supplied using the afterburner only.

The following table includes estimated production costs for a conventional lightweight aggregate facility:

Table 4: Estimated Production Costs for Lightweight Aggregate (US$)

	Plant A	Plant B	Average of Several Plants
Labor	3.25	4.80	4.05
Fuel	2.50	3.30	2.80
Power	0.75	0.88	0.85
Other	0.50	1.00	0.80
Total	7.00	9.98	8.50
Maintenance	1.08	1.20	1.10
Total	8.08	11.18	9.60
Overhead	1.00	1.60	1.30
Depreciation	1.15	3.00	2.00
Total / cu yd LWA	10.23	15.78	12.90

However, it should be noted that the fuel costs for a dredge-to-LWA facility would be 2x the above values due to the inclusion of an afterburner to the process. So the fuel cost would be 6.60 and the overall cost per cubic yard of LWA would be $ 19.08.

The cost for a "greenfield" plant designed to process 500,000 stpy of dredge material into lightweight aggregate is approximately $30MM. However, by utilizing used equipment or developing a dredge processing plant at some existing facility that has a rotary kiln, this price could be dramatically reduced.

Since the early 1960's FFE Minerals has performed pilot kiln tests and laboratory tests on potential raw materials. FFE Minerals has performed testing on the raw materials of all of the current 27 operating LWA plants in North America. Based on that experience, we have determined that this process could be commercialized from a process and aggregate quality standpoint.

Table 5: Average Kiln Operating Data-Part 1

DATE		13-14Mar	14-16Mar	16-17Mar
PHASE		1	2	3
TIME		0807-0750hr	0750-0545hr	0545-0300hr
TEMPERATURE (°C):				
COOLER PLENUM		58	87	n/a
COOLER AIR OUT		269	345	n/a
COOLER DISCHARGE		47	59	n/a
KILN #1		1089	1062	1049
KILN #2		1019	995	976
KILN #3		866	839	810
KILN #4		701	668	635
KILN #5		565	530	490
KILN #6		485	452	411
KILN EXIT		461	437	414
KILN EXIT SAMPLE DUCT		385	353	339
AFTERBURNER INLET		267	249	238
AFTERBURNER OUTLET		915	912	915
FILTER INLET		239	237	217
FILTER OUTLET		155	147	143
SCRUBBER OUTLET		45	45	44
HOT ZONE OPTICAL		1082	1077	n/a
PRESSURE ("WG):				
COOLER PLENUM		4.1	1.5	n/a
COOLER FREEBOARD		0.0	0.0	n/a
FIRING HOOD		0.0	0.0	0.0
FEED HOOD		0.0	0.0	0.0
AFTERBURNER INLET		0.0	0.0	0.0
AFTERBURNER OUTLET		-0.1	-0.1	-0.2
FILTER INLET		-0.6	-0.5	-0.8
FILTER OUTLET		-3.0	-2.4	-3.0
TELEDYNE DATA (% DRY):				
KILN EXIT	%O2	9.00%	8.80%	8.67%
	% COMB	0.38%	1.53%	0.40%
AFTERBURNER OUTL	%O2	4.83%	4.56%	4.45%
	% COMB	0.21%	0.20%	0.19%
FILTER OUTLET	%O2	16.15%	15.32%	14.33%
	% COMB	0.20%	0.30%	1.36%
MEASURED KILN INPUT:				
PRIMARY (BURNER) AIR (SCFM):		28.8	29.9	30.8
SECONDARY (COOLER) AIR (SCFM):		20.7	12.3	13.1

Table 6: Average Kiln Operating Data-Part 2

DATE	13-14Mar	14-16Mar	16-17Mar
PHASE	1	2	3
TIME	0807-0750hr	0750-0545hr	0545-0300hr
OXYGEN (SCFM):	5.6	6.0	6.7
TOTAL INPUT (SCFM):	55.1	48.2	50.6
FUEL OIL (GPH)	2.35	2.14	2.13
FUEL OIL (BTU/HR):	305,500	278,367	276,441
CALCULATED KILN EXIT FLOW:			
LEAK AIR (SCFM):	0.5	0.1	0.0
TOTAL FLOW (SCFM):	59.1	51.4	53.7
TOTAL FLOW (DSCFM):	52.4	45.3	47.6
TOTAL FLOW (ACFM):	147.6	124.3	125.4
KILN EXIT GAS VELOCITY (FPS):	3.1	2.6	2.7
AFTERBURNER:			
AIR (SCFM):	42.2	38.2	38.2
NATURAL GAS (SCFM):	3.6	4.4	4.4
NATURAL GAS (BTU/HR):	201,259	242,791	245,651
FILTER EXIT:			
EXIT FLOW (SCFM):	334.2	288.1	333.9
GAS SAMPLING DATA:			
KILN EXIT			
SO2 - ppm	273	365	461
NOx - ppm	432	554	528
CO - ppm	769	1007	1593
CO2 - %	14.3	15.3	15.5
O2-%	8.1	8.6	9.7
THC - ppm	26	27	26
CH4 - ppm	8	8	8
SCRUBBER EXIT			
SO2 - ppm	1	1	2
NOx - ppm	107	74	54
CO - ppm	0	0	0
CO2 - %	2.9	3.6	3.1
O2-%	17.4	16.9	17.6
THC - ppm	6	2	1
CH4 - ppm	16	5	3
MISC DATA:			
FEED RATE (LB/HR):	42.0	42.8	79.2
KILN SPEED (RPM):	1.6	1.8	1.8
MATERIAL RESIDENCE TIME (min):	42	37	37

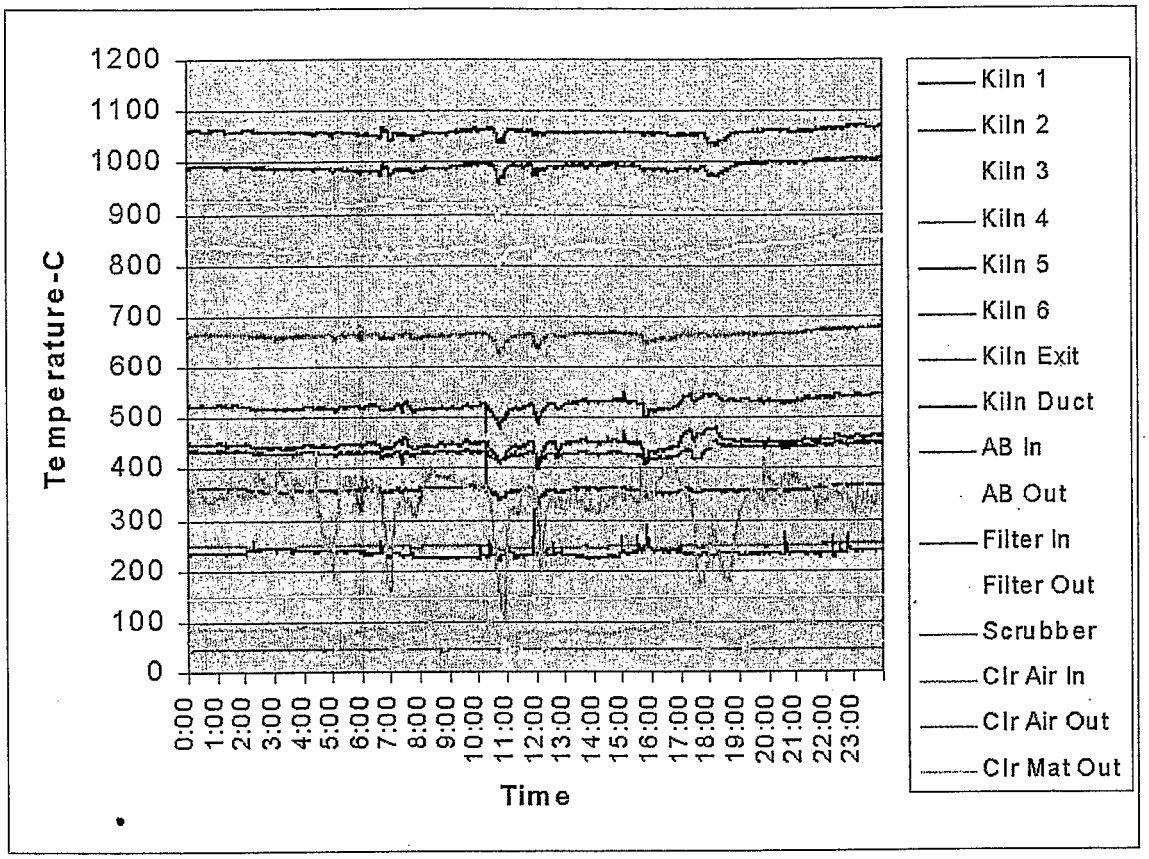

Figure 3: Kiln System Temperature Profile-15Mar

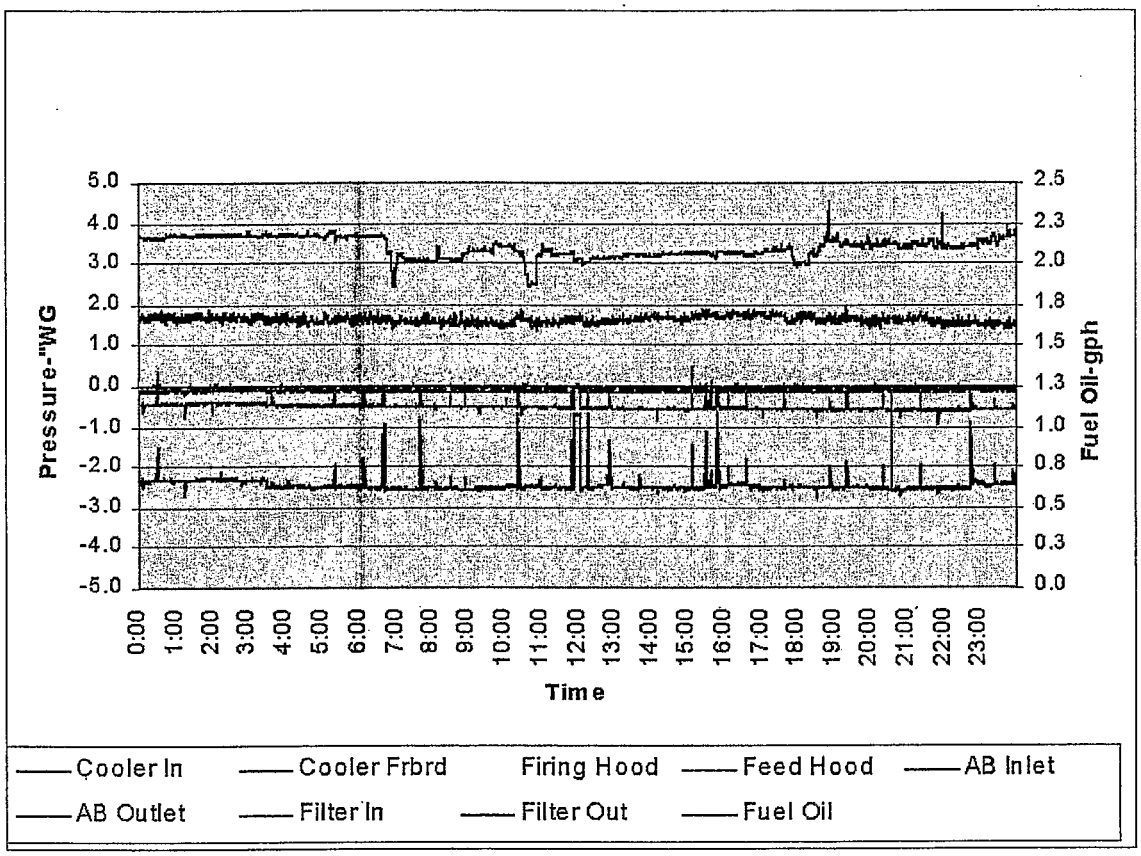

Figure 4: Kiln System Pressure Profile-15Mar

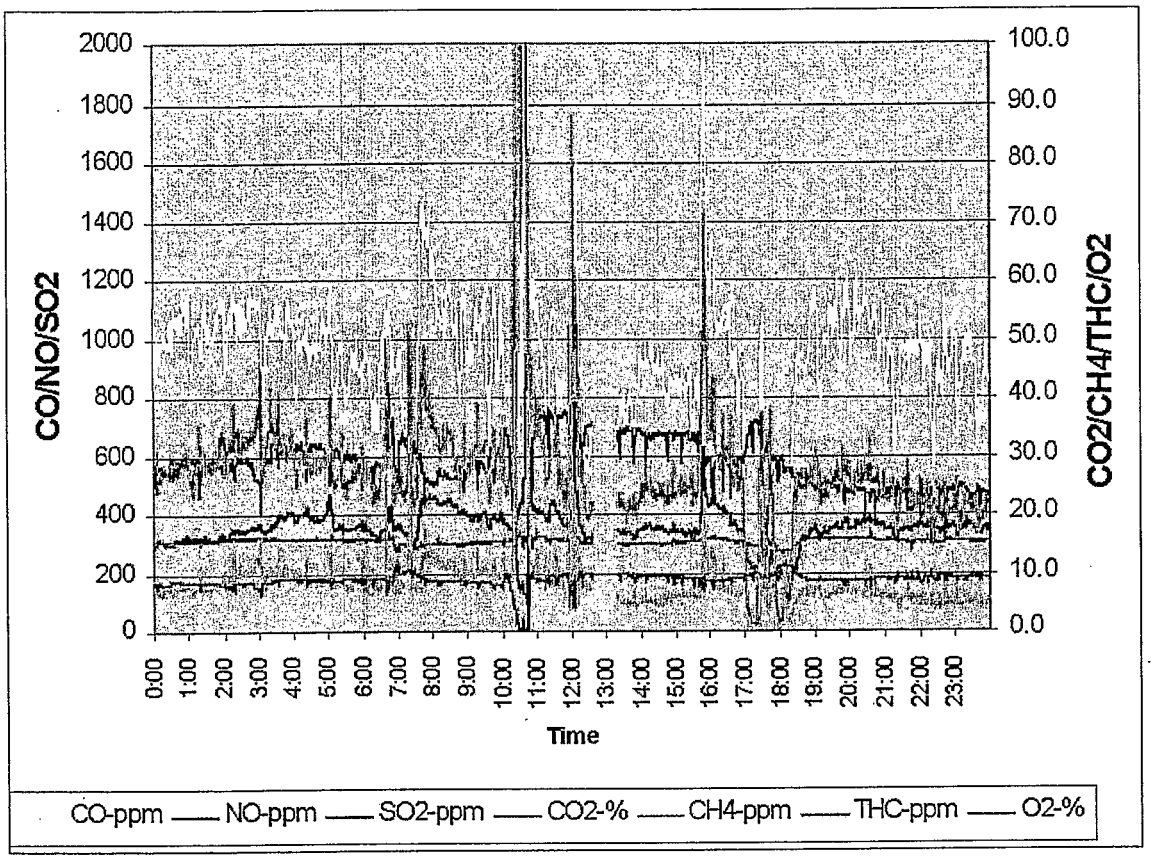

Figure 5: Kiln Exit Emission Profile-15Mar

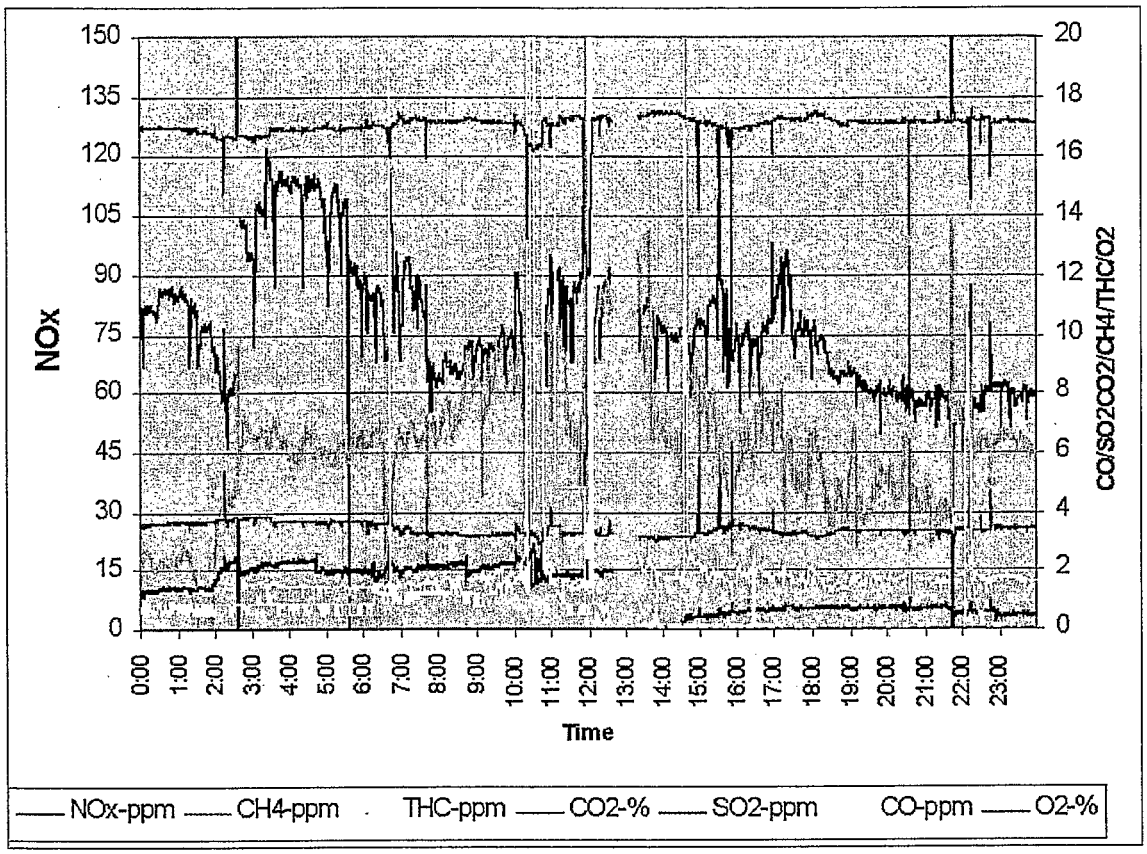

Figure 6: Scrubber Exit Emission Profile-15Mar

Table 7: Material Balance - Rotary Kiln Process

MATERIAL IN	Pounds	Loss-Free Pounds
Feed Pellets @ 14.30% H2O/10.48% LOI	4119.3	3160.3
TOTAL MATERIAL IN	**4119.3**	**3160.3**
MATERIAL OUT	**Pounds**	**Loss-Free Pounds**
Kiln Product @ 0% H2O/-0.22% LOI	3083.8	3090.6
Filter Fines @ 0% H2O/11.84% LOI	11.1	9.7
TOTAL MATERIAL OUT	**3094.9**	**3100.3**
Loss-free difference between material in and material out:	-1.90%	

Pilot Rotary Kiln System Production Balance:

76.31% Kiln Product

0.26% Filter Fines

23.43% H2O/Chemical Losses

Table 8: Heat Balance-Rotary Kiln

HEAT IN						BTU/HR	kcal/hr	%
1 Primary Air:		136.9	lb/hr	8.3	btu/lb	1,137	286	0.40%
2 Secondary Air:		55.7	lb/hr	170.5	btu/lb	9,488	2,391	3.34%
3 Fuel Oil:		2.0	gph	129,619	btu/gal LHV	261,830	65,981	92.25%
4 Oxygen:		28.8	lb/hr	6.7	btu/lb	194	49	0.07%
5 Feed Pellets:		45.0	lb/hr	8.6	btu/lb	389	98	0.14%
6 Feed Carbon (2%):		0.8	lb/hr	14000.0	btu/lb	10,798	2,721	3.80%
TOTAL IN						283,837	71,527	100.0%
HEAT OUT						**BTU/HR**	**kcal/hr**	**%**
1 Radiation & Convection:						**199,360**	**50,239**	**70.92%**
	Firing Hood:					63,404	15,978	22.55%
	Rotary Shell:					108,576	27,361	38.62%
	Feed Hood:					27,380	6,900	9.74%
2 Kiln Off Gas @	810 °F							
CO2		53.3	lb/hr x	172.8	btu/lb	9,207	2,320	3.28%
H2O		24.2	lb/hr x	373.1	btu/lb	9,015	2,272	3.21%
N2		169.8	lb/hr x	194.1	btu/lb	32,947	8,303	11.72%
3 Excess O2 @	810 °F:	20.5	lb/hr x	180.4	btu/lb	3,700	932	1.32%
4 Product @	1933 °F:	33.7	lb/hr x	456.2	btu/lb	15,368	3,873	5.47%
5 Ceramic Filter Fines @	810 °F:	0.1	lb/hr x	186.6	btu/lb	23	6	0.01%
6 Feed Moisture Latent Heat:		6.4	lb/hr x	950.0	btu/lb	6,113	1,541	2.17%
7 Unrealized Heat from CO:		0.25	lb/hr x	4,347	btu/lb	1,087	274	0.39%
8 Carbonate Calcination:		1.9	lb/hr x	840.0	btu/lb	1,634	412	0.58%
9 Bound Water:		2.2	lb/hr x	1,200.0	btu/lb	2,670	673	0.95%
TOTAL OUT						281,123	70,843	100.0%

-1.0% difference between the total heat in and the total heat out

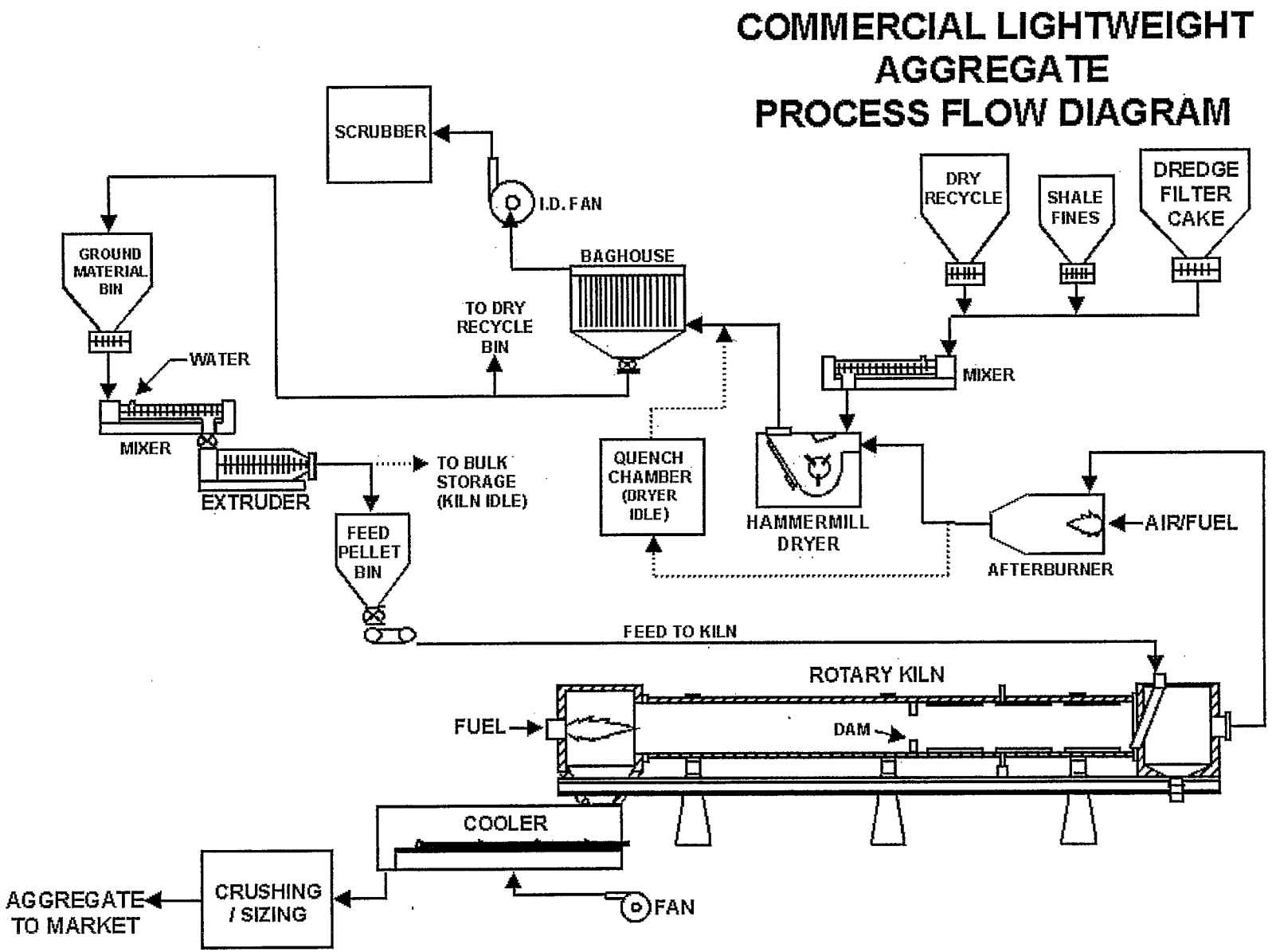

Figure 7: Commercial Process Flow Diagram

CONCLUSIONS & RECOMMENDATIONS:

1. A quality lightweight aggregate with an average bulk density of 37.6 lb/cf was produced using a conventional counter-current rotary kiln process. Commercialization of this process is considered viable.
2. The lightweight aggregate product satisfied all requirements of ASTM C330 for structural aggregate except for gradation. The problem with gradation may be easily corrected via improved screening and crushing methods.
3. Pellets with acceptable green strength for the kiln process were produced from a mix of dredge and shale using an extruder circuit.
4. The heated air-swept hammermill dryer system was effective for drying and sizing the dredge filter cake. Mixing of dry product into the dredge filter cake using a ratio of 1:1 was required to prevent sticking in the mill.
5. The emission of CO and VOC's from the hammermill circuit were very low when operating with a mill off gas temperature of 80-90°C.
6. The total contaminant inputs to the pilot rotary kiln system with the feed pellet stream were generally reduced by >90% as the result of thermal processing and the use of air pollution control equipment. The pollution control circuit was comprised of a high temperature afterburner, particulate collection filter with ceramic elements and caustic wet scrubber.
7. Emission and solids sampling as specified in the Test Program document were successfully completed during the operation of the hammermill and rotary kiln systems.
8. Since the early 1960's FFE Minerals has performed pilot kiln tests and laboratory tests on potential raw materials. FFE Minerals has performed testing on the raw materials of all of the current 27 operating LWA plants in North America. Based on that experience, we have determined that this process could be commercialized from a process and aggregate quality standpoint.

fac
Fuller Air Compliance

Virginia Office
1401 Municipal Road NW
Roanoke, VA 24012
Phone: (540) 265-1987
Fax: (540) 265-0082

Pennsylvania Office
449 Veit Road
Huntingdon Valley, PA 19006
Phone: (215) 364-8940
Fax: (215) 364-4596

Volume 1
Report Text and Appendices A through K

Report for Air Emissions Testing and Process Materials Sampling of Thermal Processing of Ocean Dredge Materials

Conducted at
F. L. Smidth, Inc.
Catasaqua, Pennsylvania

Prepared for
JCI/Upcycle Associates, LLC
Loudonville, New York

Report Date: **June 15, 2001**
Test Dates: **February 28, 2001 and March 14–16, 2001**

FULLER BULK HANDLING
The Ful-Serve Group
fac Fuller Air Compliance
Advanced Filtration Technologies

1-877-Ful-Serve

FAC Contract Number 01-70155-095

TABLE OF CONTENTS

Volume 1

Page

1.0 Introduction 1
- 1.1 Summary of Test Program 1
  - 1.1.1 General Information 1
  - 1.1.2 Objective 1
  - 1.1.3 Test Program 1
- 1.2 Key Personnel 5

2.0 Plant and Sampling Location Descriptions 6
- 2.1 Process Description and Operation 6
- 2.2 Control Equipment Description 8
- 2.3 Flue Gas and Process Sampling Locations 8
  - 2.3.1 Hammermill Baghouse Exhaust 8
  - 2.3.2 Rotary Kiln Outlet (Air Pollution Control Inlet) 10
  - 2.3.3 Rotary Kiln Scrubber Outlet 12
  - 2.3.4 Process Sampling Locations 14
    - 2.3.4.1 Fuel Oil 14
    - 2.3.4.2 Shale 14
    - 2.3.4.3 Feed Pellets 14
    - 2.3.4.4 Aggregate Product 14
    - 2.3.4.5 Ceramic Filter Catch 15
    - 2.3.4.6 Scrubber Liquor 15
    - 2.3.4.7 Scrubber Makeup Water 15

3.0 Summary and Discussion of Test Results 15
- 3.1 Test Logs 15
- 3.2 Field Test Changes and Problems 16
  - 3.2.1 Shortened Mercury, Particulate, and PCDD/PCDF Sampling Runs at the Hammermill Baghouse Outlet 16
  - 3.2.2 Voided PCDD/PCDF Run 16
  - 3.2.3 Voided EPA Methods 3A, 6C, 7E, 10 and 25A 16
  - 3.2.4 Interrupted PCDD/PCDF Sampling 17
  - 3.2.5 Single Point Sampling at the Hammermill Baghouse Outlet Sampling Location 18
  - 3.2.6 No Duplicate Analysis of the Ceramic Filter Catch 18
  - 3.2.7 Consistent Presence of Methylene Chloride, Chloroform and Toluene in the EPA Method 0030 and Process Samples 18
  - 3.2.8 Reanalysis of Scrubber Water Samples for Mercury 19
- 3.3 Presentation of Results 20

1.0 Introduction

1.1 Summary of Test Program

1.1.1 General Information An air emissions testing program was conducted on pilot-scale equipment for thermal processing of dredged materials for JCI/Upcycle Associates, LLC (JCI). Testing was conducted at F. L. Smidth Inc.'s Research and Development facility in Catasaqua, Pennsylvania. Testing was performed on February 28 and March 14-16, 2001 by Fuller Air Compliance (FAC) of Roanoke, Virginia.

F. L. Smidth, Inc. coordinated the test program, operated the thermal processing equipment, and collected process samples. FAC (a division of F. L. Smidth) provided the personnel for sampling of all stack emissions, and for the quality control and quality assurance of sampling and analysis.

1.1.2 Objective The purpose of testing was to quantify air emissions from three points within the thermal process facility: the outlet to the baghouse serving the Hammermill grinder dryer, the inlet to the emissions control equipment serving the rotary kiln, and the outlet to the emissions control equipment serving the rotary kiln. A description of the thermal process facility is provided in Section 2.

1.1.3 Test Program A summary of the test program, including pollutants sampled and number and duration of each test run at each location is provided in Table 1-1. Tables 1-2 A and B detail the process materials sampling.

Table 1-1: Test Program Overview for Air Emissions Sampling: JCI/Upcycle

Process Stream (s)	Sampling Method(s)	Pollutant(s) Sampled	Analytical Method	No of Runs	Run Duration
Hammermill Grinder Dryer	EPA Method 6C[1]	Sulfur Dioxide (SO_2)	EPA Method 6C[1]	2	167.4 and 180 minutes[7]
	EPA Method 7E[1]	Nitrogen Oxides (NO_x)	EPA Method 7E[1]	2	
	EPA Method 10[1]	Carbon Monoxide (CO)	EPA Method 10[1]	2	
	EPA Method 25A[1]	Total Hydrocarbons (THC)	EPA Method 25A[1]	2	
	EPA Method 23[1]	Dioxins/Furans	EPA Method 8290[6]	2	
	EPA Method 5[1][3] EPA Method 101A[2][3]	Particulate Mercury	EPA Method 5[1] EPA Method 101A[2]	2	118 and 120 minutes[7]
Rotary Kiln Exit APC Inlet and Outlet[4]	EPA Method 6C[1]	Sulfur Dioxide (SO_2)	EPA Method 6C[1]	3	60 minutes
	EPA Method 7E[1]	Nitrogen Oxides (NO_x)	EPA Method 7E[1]	3	60 minutes
	EPA Method 10[1]	Carbon Monoxide (CO)	EPA Method 10[1]	3	60 minutes
	EPA Method 25A[1]	Total Hydrocarbons (THC)	EPA Method 25A[1]	3	60 minutes
	EPA Method 5[1] (New Jersey Method 1[5]) EPA Method 202	Particulate Condensible Particulate	EPA Method 5[1] (New Jersey Method 1[5]) EPA Method 202	3	60 minutes
	EPA Method 23[1]	Dioxins/Furans Semivolatile Organics PCB's	EPA Method 23[1] EPA Method 8270[6] EPA Method 8082[6]	3	180 minutes
	Modified EPA Method 23[1]	Total Chromatographable Semivolatile Organics	EPA Method 600/R36/036[8]	3	180 minutes
	EPA Method 29[1]	Multiple Metals	EPA Method 29[1]	3	120 minutes
	EPA Method 0030[6]	Volatile Organics	EPA Method 8260[6]	3	40 minutes
	EPA Method 0040[6]	Volatile Organics	EPA Method 18[1]	3	60 minutes
	EPA Method 0050[6]	Hydrogen Chloride (HCl) Hydrogen Bromide (HBr) Hydrogen Fluoride (HF) Chlorine (Cl_2) Ammonia (NH_3)	EPA Method 0050[6]	3	120 minutes
	EPA Method 0061[6]	Hexavalent Chromium	EPA Method 0061[6]	3	120 minutes

Notes:

(1) From 40 CFR 60, Appendix A.
(2) From 40 CFR 61, Appendix B.
(3) EPA Methods 5 was performed in conjunction with EPA Method 101A using a combined sampling train (see discussion Section 4.1.6)
(4) With the exception of EPA Methods 6C, 7E, 10, and 25A, the rotary kiln exit (scrubber inlet) and scrubber outlet were tested simultaneously)
(5) From New Jersey Technical Manual 1004, *Guidelines for Compliance Stack Emission Test Programs, July 2000*
(6) From *Test Methods for Evaluating Solid Waste, Physical/Chemical Methods* (EPA SW-846).
(7) The first sampling run at the hammermill baghouse outlet was abbreviated because of a process upset (see discussion Section 3.2.1)
(8) From EPA *Methods for Chemical Analysis of Water and Wastes.*

Table 1-2 A. Process Materials Sampling Overview: JCI/Upcycle				
Sample Type	**Analyte(s)**	**Sample Analysis Method**	**Sample Frequency**	**Number of Samples Analyzed (3)**
Fuel Oil	Halogens (Chlorine, Bromine, Fluorine)	EPA Method 300.0(1)	1 per entire test program	2 samples: grab sample and duplicate
Shale	Metals (Excluding Mercury)	EPA Method 6010B(2)	1 per entire test program	2 samples: grab sample and duplicate
	Mercury	EPA Method 7471(2)		
	Halogens (Chlorine, Bromine, Fluorine)	EPA Method 300.0(1)		
	Total Organic Carbon	See Section 4.2.2.11		
Feed Pellets	Metals (Excluding Mercury)	EPA Method 6010B(2)	60 min	4 samples: 1) composite of first test day 2) composite of second test day 3) composite of samples 1 and 2 4) duplicate of 2
	Mercury	EPA Method 7471(2)		
	Halogens (Chlorine, Bromine, Fluorine)	EPA Method 300.0(1)		
	PCDD/PCDF	EPA Method 8290(2)		
	Herbicides	EPA Method 8150(2)		
	Pesticides	EPA Methods 3550B(2) and 8081(2)		
	PCBs	EPA Methods 3550B(2) and 8082(2)		
	Volatile Organic Compounds	EPA Method 8260(2)		
	Semivolatile Organic Compounds	EPA Method 8270(2)		
	TCLP Volatiles	EPA Method 8260(2)		
	TCLP Semivolatiles	EPA Method 8270(2)		
Ceramic Filter Catch	Metals (Excluding Mercury)	EPA Method 6010B(2)	180 min	3 samples: 1) composite of first test day 2) composite of second test day 3) composite of samples 1 and 2
	Mercury	EPA Method 7471(2)		
	Total Organic Carbon	See Section 4.2.2.11		
	PCDD/PCDF	EPA Method 8290(2)		
	Herbicides	EPA Method 8150(2)		
	Pesticides	EPA Methods 3550B(2) and 8081(2)		
	PCBs	EPA Methods 3550B(2) and 8082(2)		
	Volatile Organic Compounds	EPA Method 8260(2)		
	Semivolatile Organic Compounds	EPA Method 8270(2)		
	TCLP Volatiles	EPA Method 8260(2)		
	TCLP Semivolatiles	EPA Method 8270(2)		

Table 1-2 B. Process Materials Sampling Overview: JCI/Upcycle				
Sample Type	**Analyte(s)**	**Sample Analysis Method**	**Sample Frequency**	**Number of Samples Analyzed [3]**
Aggregate Product	Metals (Excluding Mercury)	EPA Method 6010B[2]	30 min	3 samples: 1) composite of first test day 2) composite of second test day 3) composite of samples 1 and 2 4) duplicate of 2
	Mercury	EPA Method 7471[2]		
	Halogens (Chlorine, Brom ine, Fluorine)	EPA Method 300.0[1]		
	PCDD/PCDF	EPA Method 8290[2]		
	Herbicides	EPA Method 8150[2]		
	Pesticides	EPA Methods 3550B[2] and 8081[2]		
	PCBs	EPA Methods 3550B[2] and 8082[2]		
	Volatile Organic Compounds	EPA Method 8260[2]		
	Semivolatile Organic Compounds	EPA Method 8270[2]		
	TCLP Volatiles	EPA Method 8260[2]		
	TCLP Semivolatiles	EPA Method 8270[2]		
	TCLP Metals (Excluding Mercury)	EPA Method 6010B[2]		
	TCLP Mercury	EPA Method 7471[2]		
	MEP Metals (Excluding Mercury)	EPA Method 6010B[2]		
	MEP Mercury	EPA Method 7471[2]		
Scrubber Makeup Water	Metals (Excluding Mercury)	EPA Method 6010B[2]	1 per entire test program	2 samples: grab sample and duplicate
	Mercury	EPA Method 7471[2]		
	Total Halogens	EPA Method 300.0[1]		
Scrubber Liquor	Metals (Excluding Mercury)	EPA Method 6010B[2]	240 min	4 grab samples at: 1) test beginning 2) test midpoint 3) test end 4) duplicate of 3
	Mercury	EPA Method 7471[2]		
	Total Halogens	EPA Method 300.0[1]		

[1]From EPA *Methods for Chemical Analysis of Water and Wastes.*
[2]From EPA *Test Methods for Evaluating Solid Waste, Physical/Chemical Methods* (EPA SW-846).
[3]Detailed breakdown of sample collection and analyses is presented in Section 4.3.2.1.

All testing on the Hammermill grinder dryer was conducted February 28, 2001. The rotary kiln was tested March 14-16, 2001. With the exception of the gaseous pollutant testing for SO_2, NO_x, CO and THC, each test run was accompanied by simultaneous measurement of average temperature, moisture content, molecular weight, velocity, and volumetric flow rate of the flue gas. The SO_2, NO_x, CO and THC testing was conducted concurrently with volumetric flowrate measurements to facilitate calculation of mass emission rates. At the rotary kiln, and also with the exception of the testing for SO_2, NO_x, CO and THC, test runs were conducted simultaneously at the inlet and outlet to the pollution control systems. Inlet and outlet SO_2, NO_x, CO and THC testing was conducted separately, but on the same test day.

1.2 Key Personnel The following personnel participated in the test program:

Name	Affiliation	Position	Telephone No.
Jay Derman, PE	JCI/Upcycle	Overall Project Manager	(518) 463-0905
Bill Lindquist	F. L. Smidth, Inc.	Manager - R & D	(610) 266-5042
Mike Prokesch	F. L. Smidth, Inc.	Senior Project Engineer	(610) 266-5039
Art Nunn	FAC	Vice President	(540) 639-7536
Andy Hetz	FAC	Manager - Field Testing	(540) 639-8768
Tony Underwood	FAC	Project Manager	(540) 265-1987
Jeff Poiron	FAC	Quality Assurance Coordinator	(215) 364-8940
Dave Vecellio	FAC	Assistant Project Manager	(540) 265-1987
Rusty Caton	FAC	Field Technician	(540) 265-1987
Frank Craighead	FAC	Field Technician	(540) 265-1987
Charlie Garner	FAC	Field Technician	(540) 265-1987
Paul Rice	FAC	Field Technician	(215) 364-8940
Jason Young	FAC	Field Technician	(215) 364-8940
James McKenna	Fuller Bulk Handling	Field Technician	(610) 264-6469
Jeremy McKenna	FAC	EPA Observer	(540) 265-1987
Huan Feng	Montclair State Univ.	EPA Observer	(631) 344-4588
Keith Jones	BNL*	Program Manager	(631) 344-4588
Eric Stern	USEPA	Project Manager	(212) 637-3806
Scott Douglas	NJMR	Maritime Specialist	(609) 984-8564
Lisa Baron	NJMR		(609) 984-8564

2.0 Plant and Sampling Location Descriptions

2.1 Process Description and Operation The aggregate product was a mixture of dredge material, shale and water. Prior to thermal processing, the feed materials were ground and dried in the Hammermill grinder dryer. The shale and dredge feed stocks were processed separately. A GP-1518 impact dryer mill was used to grind the feed material and dry it to less than 5%. Hot air generated by a direct gas-fired combustion chamber entered the bottom of the mill along with the feed stream. The material was dispersed into the gas stream by the high-speed rotor, and the material-laden gas passed through the rotor and up to a dynamic separator. The separator consisted of a spinning impeller that captured and returned the larger particles to the Hammermill and allowed the fines to pass through to a baghouse.

The dried dredge and shale collected in the baghouse were mixed at a ratio of 70% dredge to 30 % shale (dry weight), and then hydrated to a moisture content of approximately 15 % by weight. The feed mixture was then loaded into an auger-type extruder and extruded into pellets approximately 0.5 inches in diameter and 2 inches long.

The pelletized feed material was processed in a #2 fuel oil-fired counter-current rotary kiln. The kiln hot zone temperature was adjusted in the range of 1050 -1150°C (1920 - 2100°F) to support the thermal expansion of the material required for the production of lightweight aggregate. Total material residence time in the kiln ranged from 30 to 60 minutes. Figure 2-1 shows a diagram of the rotary kiln, including all sampling locations.

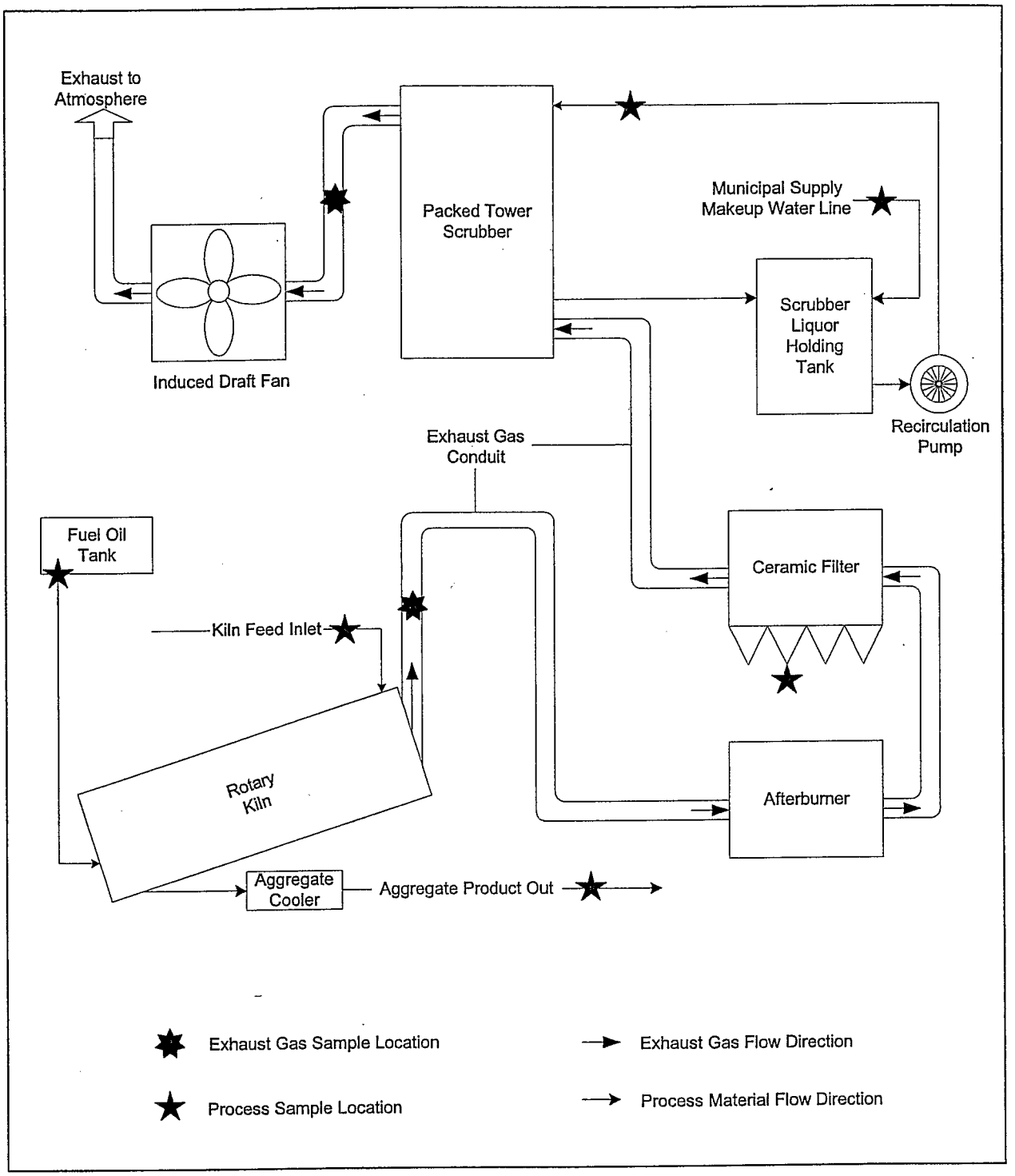

Figure 2-1. Process Schematic of Rotary Kiln

2.2 Control Equipment Description Particulate emissions (as well as product collection) from the Hammermill grinder dryer was achieved by a jet pulse baghouse.

The kiln exhaust was directed to a natural gas-fired afterburner operating at 900-950°C (1650-1740°F) for the combustion of hydrocarbons and carbon monoxide. Following the afterburner, emissions passed through a high-temperature ceramic filter for particulate removal. At that point, the gas stream entered a packed tower scrubber where an aqueous sodium hydroxide solution was used to remove acid gases.

2.3 Flue Gas and Process Sampling Locations

2.3.1 Hammermill Baghouse Exhaust Flue gas sampling was performed at the outlet to the baghouse serving the Hammermill grinder dryer. Figure 2-2 provides a schematic of the Hammermill baghouse exhaust sampling location. The exhaust duct had an internal diameter of 17.5 inches at the sampling location and two sets of two test ports (4 inches in diameter), each set positioned apart at a 90° angle. The first set of test ports were used for mercury and particulate testing, and were located 97 inches (5.5 diameters) downstream from the nearest disturbance and 159 inches (9.1 diameters) from the nearest upstream disturbance. The second set of test ports were used for dioxin/furan, SO_2, NO_x, CO and THC testing, and were located 206 inches (11.8 diameters) downstream from the nearest disturbance and 50 inches (2.9 diameters) from the nearest upstream disturbance.

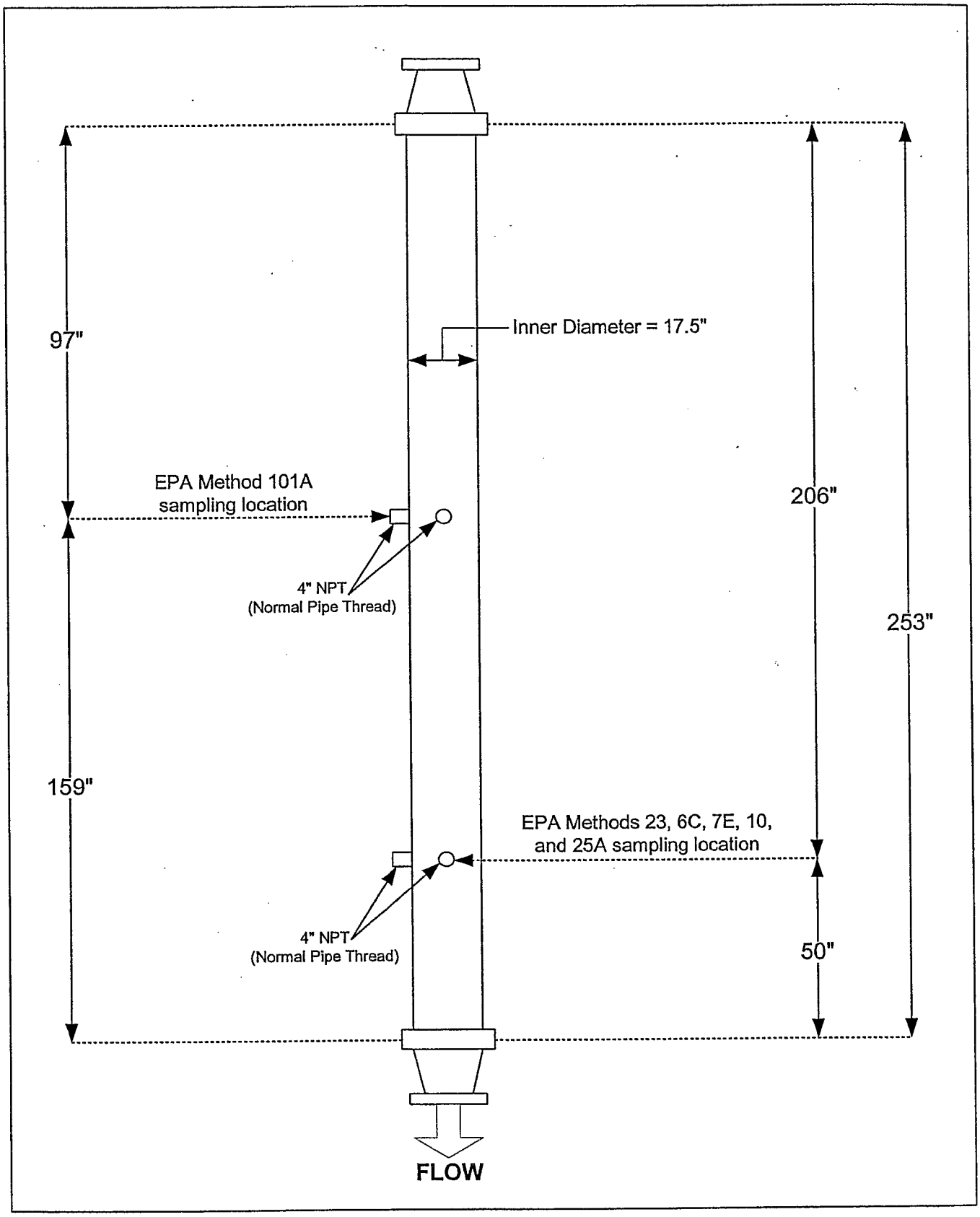

Figure 2-2: Schematic of Hammermill Baghouse Outlet Sampling Locations

2.3.2 Rotary Kiln Outlet (Air Pollution Control Inlet) Figure 2-3 provides a schematic of the rotary kiln outlet (air pollution control inlet) sampling location. The exhaust duct had an internal diameter of 7.9 inches at the sampling location and was equipped with four levels of test ports used in sampling, accessed by temporary scaffolding. The duct was also equipped with monorail supports which were used to support each sampling train. All sampling was conducted at a single point near the center of the duct. The first (or lower) level test port was used for EPA Methods 0040, 0061, 23 and particulate testing and was located 49 inches (6.2 diameters) downstream from the nearest disturbance, and 61 inches (7.7 diameters) from the nearest upstream disturbance. The second level test port was used for the SO_2, NO_x, CO and THC testing and was located 65 inches (8.2 diameters) downstream from the nearest disturbance, and 45 inches (5.7 diameters) from the nearest upstream disturbance. The third level test port was used for the EPA Methods 0030, 29, 0050 and total chromatographable organics testing, and was located 85 inches (10.8 diameters) downstream from the nearest disturbance, and 25 inches (3.2 diameters) from the nearest upstream disturbance. The fourth (or upper) level consisted of two test ports used to conduct flow and temperature measurements testing, and was located 85 inches (13.0 diameters) downstream from the nearest disturbance, and 7 inches (0.9 diameters) from the nearest upstream disturbance.

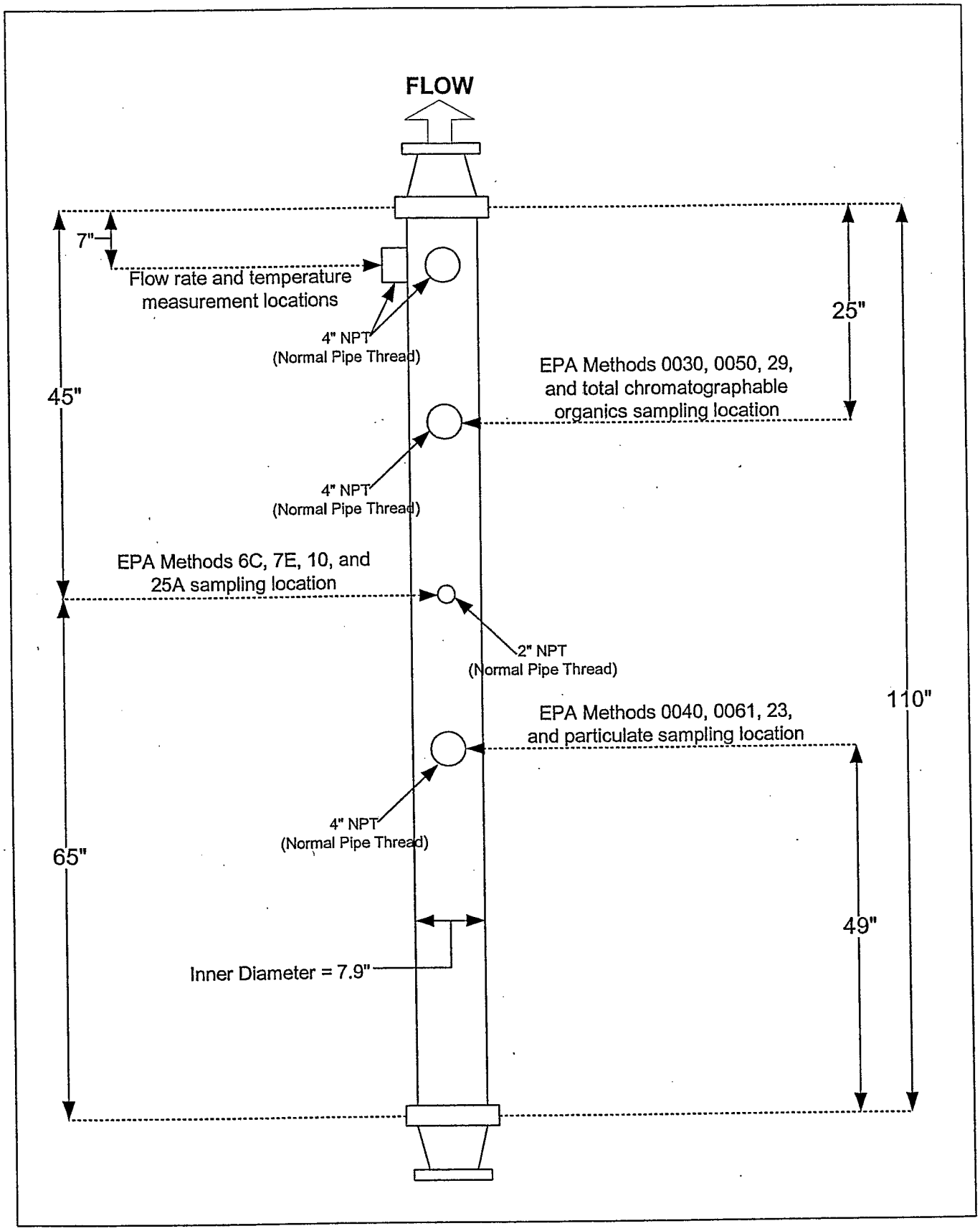

Figure 2-3: Schematic of Kiln Outlet (Air Polution Control Inlet) Sampling Locations

2.3.3 Rotary Kiln Scrubber Outlet Figure 2-4 provides a schematic of the rotary scrubber outlet sampling location. The exhaust duct had an internal diameter of 7.9 inches at the sampling location and was equipped with four levels of test ports used in sampling. The test ports were accessed by temporary scaffolding and were equipped with monorail attachments which were used to support the sampling trains. All sampling was conducted at a single point near the center of the duct. The first (or upper) level location consisted of two test ports offset at 90°. These ports were used for flow and temperature testing, and were located 49 inches (6.2 diameters) downstream from the nearest disturbance and 61 inches (7.7 diameters) from the nearest upstream disturbance. The second level test port was used for the SO_2, NO_x, CO and THC testing, and was located 65 inches (8.2 diameters) downstream from the nearest disturbance and 45 inches (5.7 diameters) from the nearest upstream disturbance. The third level test port was used for the for EPA Methods 0040, 0061, 23 and particulate testing, and was located 85 inches (10.8 diameters) downstream from the nearest disturbance and 25 inches (3.2 diameters) from the nearest upstream disturbance. The fourth (or lower) level test port was used for the EPA Methods 0030, 29, 0050 and total chromagraphable organics, and was located 85 inches (13.0 diameters) downstream from the nearest disturbance and 7 inches (0.9 diameters) from the nearest upstream disturbance.

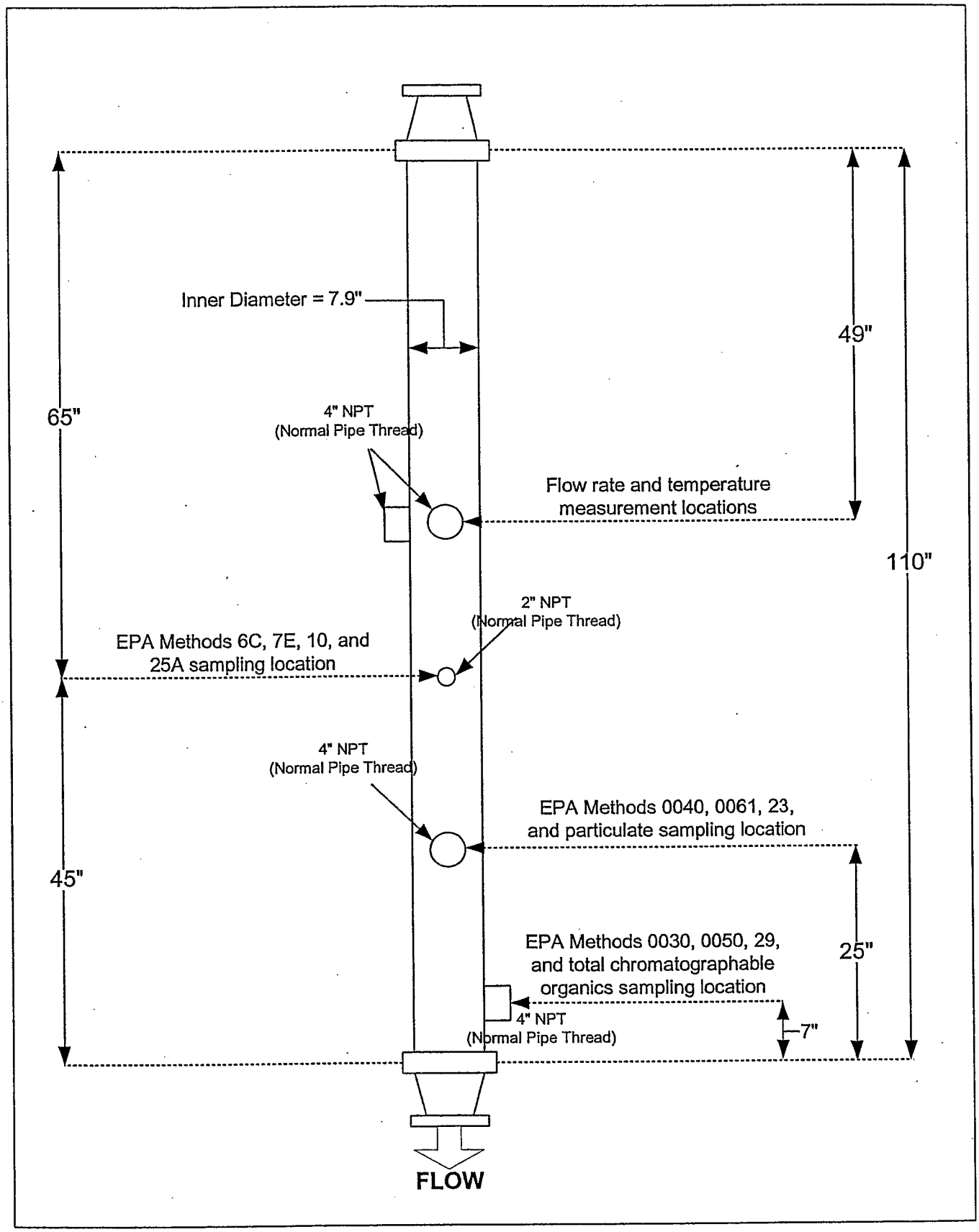

Figure 2-4: Schematic of Kiln Scrubber Outlet Sampling Locations

2.3.4 Process Sampling Locations

2.3.4.1 Fuel Oil One fuel oil sample was taken from the 150-gallon supply tank during the test program. Although the supply tank was refilled several times during testing, it was supplied by a larger supply tank that remained homogeneous during the test program.

The fuel oil sample was dipped from the tank using a polyethylene scoop and transferred to a 1 liter amber glass jar fitted with a Teflon-lined screw cap.

2.3.4.2 Shale One shale sample was taken from the shale feedstock during the test program. The sample was taken from a location in the process after the Hammermill grinder dryer, but before the mixing stage of the shale and dredge material in the forming of the raw feed pellets. A stainless steel scoop was used to take the sample. The sample was stored in labeled polyethylene bags.

2.3.4.3 Feed Pellets One sample of the raw feed pellets was taken each hour during the test program. The sample was taken from the feed conveyor at the inlet to the kiln. A stainless steel scoop was used to take the samples and transfer each sample to a labeled polyethylene bag.

2.3.4.4 Aggregate Product The finished aggregate product was sampled from the product cooler at the discharge to the kiln. Samples were taken once every 30 minutes

during the test program using a stainless steel scoop. Each sample was stored in a labeled polyethylene bag.

2.3.4.5 Ceramic Filter Catch Samples were taken from the hopper beneath the ceramic filter once every three hours during the test program. The samples were collected in a steel container and transferred to labeled polyethylene bags.

2.3.4.6 Scrubber Liquor Scrubber liquor samples were taken prior to entry into the scrubber. Sampling was conducted from a tap between the discharge of the recirculation pump and the spray nozzles within the scrubber. Samples were collected and stored in 250 ml amber glass jars fitted with Teflon-lined screw caps approximately every 240 minutes during testing.

2.3.4.7 Scrubber Makeup Water Potable water from the local municipal water supply was used as scrubber water makeup. Samples were collected every 120 minutes from at tap on the makeup line prior to the scrubber water holding tank. The samples were poured directly from the tap into 250 ml amber glass jars fitted with Teflon-lined screw caps.

3.0 Summary and Discussion of Test Results

3.1 Test Logs Test logs detailing the date and time of each test are provided in Appendix A.

3.2 Field Test Changes and Problems No major problems were encountered in the execution of this test program, and no significant test changes were made. With the exceptions discussed below, all testing was conducted in accordance with the quality assurance project plan issued by FAC prior to the test program.

3.2.1 Shortened Mercury, Particulate, and PCDD/PCDF Sampling Runs at the Hammermill Baghouse Outlet The Hammermill grinder dryer came off line (the rotor stopped) with 2 minutes left in the first EPA Method 5/101A (HDO-M5/101A-R1) sampling run, and with 12.6 minutes left in the first PCDD/PCDF (HDO-M23-R1) sampling run. Since the testing was nearly complete, the decision was made to consider the abbreviated run as valid rather than to restart the run after the process came on line.

3.2.2 Voided PCDD/PCDF Run The post-test leak check failed for the first PCDD/PCDF run conducted at the kiln scrubber outlet (KSO-M23-R1; 03/14/01). Subsequently, the run was voided and an additional test run was conducted at both the air pollution control inlet and outlet locations. Data reported in Tables 3-8, 3-9, 3-10A, 3-10B, 3-11A, 3-11B, 3-12, and 3-13 (presented in Section 3.3) are based on the second third, and fourth PCDD/PCDF runs.

3.2.3 Voided EPA Methods 3A, 6C, 7E, 10 and 25A The second EPA Methods 3A, 6C, 7E, 10 and 25A run (KSO-CEM-R2 and KSI-CEM-R2) conducted on March 14,

2001 was not used in the three run average because a carbon monoxide spike caused the CO monitor to read above the span of the analyzer. Only O_2 and CO_2 data were used from the run due to the potential for a process upset. Data were lost for the third EPA Methods 3A, 6C, 7E, 10 and 25A run (KSO-CEM-R3 and KSI-CEM-R3) conducted on March 14, 2001. KSO-CEM-R3 was lost due to equipment malfunction which prevented the downloading of the CEM data from the datalogger to the CEM computer. Data for these runs were collected for EPA Methods 3A, 6C, 7E, 10 and 25A at the air pollution control outlet and EPA Method 3A (for O_2 and CO_2) at the air pollution control inlet location. Subsequently, two additional 60-minute runs were conducted and these data are reported in Tables 3-3 and 3-4 (see Section 3.3 to follow).

The loss of the EPA Method 3A (O_2 and CO_2) data also affects the determination of gas molecular weight used to calculate flow for concurrent particulate and EPA Method 0050 sampling runs. Since O_2 and CO_2 concentrations were nearly constant throughout the test program, data for the lost test runs were taken from the average of valid O_2 and CO_2 test runs immediately before and after the data were lost.

3.2.4 Interrupted PCDD/PCDF Sampling On March 15 at 1731, the fourth PCDD/PCDF sampling run conducted on the kiln was interrupted due to a loss of power to the 110-volt kiln power circuit. Power was restored and sampling resumed on March 15 at 1849 after the kiln had stabilized.

3.2.5 Single Point Sampling at the Hammermill Baghouse Outlet Sampling Location All isokinetic sampling at the Hammermill baghouse outlet was conducted at a single point of average velocity. This differs from the procedures outlined in the QAPP, which proposed traversing the isokinetic sampling trains at twelve points (six in each of two ports) in accordance with EPA Method 1.

The deviation was made for two reasons. First, one of the sampling ports at each of the two test locations was obstructed by a baghouse which was directly behind the sampling ports. Second, the available temporary scaffolding and lack of a monorail attachment did not allow the test team to support the sampling train during a traverse.

3.2.6 No Duplicate Analysis of the Ceramic Filter Catch Duplicate analyses were not performed on the ceramic filter catch samples as originally stated in the QAPP. Notwithstanding that the entire ceramic filter catch was collected for the process samples, the sample volume was not sufficient to conduct duplicate analyses.

3.2.7 Consistent Presence of Methylene Chloride, Chloroform and Toluene in the EPA Method 0030 and Process Samples The EPA Method 0030 and process sample results for methylene chloride, toluene, and chloroform may be the result of field or laboratory contamination. Both methylene chloride and toluene were present in the EPA Method 0030 blank (the EPA Method 0030 analyses did not include chloroform) and were found in higher quantities at the outlet than at the inlet sampling location. These solvents were used in the field and at the analytical laboratory.

FAC is unsure at what point the suspected contamination may have occurred. Measures were taken in the field to prevent solvent contamination. The EPA Method 0030 samples were recovered in a separate trailer and kept in separate coolers from other samples to prevent this from occurring. Also, the process samples were handled by F. L. Smidth personnel and kept completely separate from the emissions testing samples, some of which contained methylene chloride and toluene.

However, contamination with laboratory solvents is common and difficult to trace in the air sampling industry, given that quantities are detected and measured at the microgram level and gallons of these reagents were used in sampling and analysis. In any event, the methylene chloride, toluene, and chloroform results should be considered suspect for this sampling program.

3.2.8 Reanalysis of Scrubber Water Samples for Mercury The scrubber water mercury concentrations presented Table 3-33 are the result of a re-analysis of the samples. Initially, the analyses showed a decrease in mercury concentration over time (which was later found not to be the case). These results were questioned and a re-analysis was conducted.

Further investigation revealed that the caustic within the scrubber water was neutralizing the acid used to digest precipitate within the samples prior to analysis. The precipitate had apparently contained mercury that was not dissolved into solution prior to the first analysis. During re-analysis, additional acid was added to the samples to overcome the effect of the caustic and the precipitate within the samples was dissolved into solution.

3.4 Presentation of Results Tables 3-1A through 3-1C summarize the overall air emissions of the various analyte groups sampled during the test program. Tables 3-2 through 3-26 show summaries of the results for each of the sampling methods used during the test program. Tables 3-27 through 3-33 present summaries of the process samples results. More detailed data and results can be found in Appendices B through K.

TABLE 3-1A

OVERALL SUMMARY OF ANALYTICAL RESULTS

FROM JCI/UPCYCLE TEST PROGRAM

Pollutant	Reporting Units	Hammermill Dryer Outlet	Kiln Scrubber Inlet	Kiln Scrubber Outlet
Instrumental Monitoring System Analytes via EPA Methods 6C, 7E, 10 and 25A				
Sulfur dioxide (SO_2)	lb/hr	* 0.02	0.21	9.33×10^{-4}
Nitrogen oxides (NO_x) as NO_2	lb/hr	0.04	0.18	1.99×10^{-1}
Carbon monoxide (CO)	lb/hr	0.29	0.25	2.07×10^{-2}
Non Methane Volatile Organic Compounds (NMVOC) as propane	lb/hr	NA	0.014	2.99×10^{-3}
Volatile Organic Compounds (VOC) as propane	lb/hr	0.19	NA	NA
Total Particulate Material via EPA Method 5 (Hammermill) and NJ Method 1/EPA Method 202 (Kiln)				
Total Particulate Material (PM)	lb/hr	0.14	0.18	0.0142
PCDD/PCDF, SVOC (Analytical Method 8270), and PCB via EPA Method 23				
Polychlorinated dibenzo-p-dioxins (PCDD)	lbTEQ/hr	1.03×10^{-12}	2.02×10^{-9}	7.29×10^{-12}
Polychlorinated dibenzofurans (PCDF)	lbTEQ/hr	2.11×10^{-11}	3.32×10^{-9}	2.51×10^{-11}
Semi-volatile organic compounds (SVOC)	—	NA	see Table 3-10	see Table 3-11
Total mono-chlorinated biphenyls	lb/hr	NA	1.23×10^{-7}	1.31×10^{-9}
Total di-chlorinated biphenyls	lb/hr	NA	2.17×10^{-7}	8.18×10^{-9}
Total tri-chlorinated biphenyls	lb/hr	NA	5.15×10^{-7}	9.65×10^{-9}
Total tetra-chlorinated biphenyls	lb/hr	NA	1.55×10^{-6}	1.14×10^{-8}
Total penta-chlorinated biphenyls	lb/hr	NA	9.36×10^{-7}	1.35×10^{-8}
Total hexa-chlorinated biphenyls	lb/hr	NA	4.37×10^{-7}	5.24×10^{-9}
Total hepta-chlorinated biphenyls	lb/hr	NA	2.03×10^{-7}	1.50×10^{-9}
Total octa-chlorinated biphenyls	lb/hr	NA	2.93×10^{-8}	1.38×10^{-10}
Total nona-chlorinated biphenyls	lb/hr	NA	2.34×10^{-8}	1.08×10^{-9}
Deca-chlorinated biphenyl	lb/hr	NA	8.40×10^{-9}	3.36×10^{-10}
Metals via EPA Method 29				
Aluminum (Al)	lb/hr	NA	2.15×10^{-3}	3.06×10^{-5}
Antimony (Sb)	lb/hr	NA	3.37×10^{-6}	3.73×10^{-7}
Arsenic (As)	lb/hr	NA	3.21×10^{-5}	1.31×10^{-6}
Barium (Ba)	lb/hr	NA	2.11×10^{-5}	9.11×10^{-7}

TABLE 3-1B

OVERALL SUMMARY OF ANALYTICAL RESULTS

FROM JCI/UPCYCLE TEST PROGRAM (continued)

Analyte(s)	Reporting Units	Hammermill Dryer Outlet	Kiln Scrubber Inlet	Kiln Scrubber Outlet
Metals via EPA Method 29 (continued)				
Beryllium (Be)	lb/hr	NA	< 4.24×10^{-7}	< 4.62×10^{-8}
Cadmium (Cd)	lb/hr	NA	4.41×10^{-5}	8.88×10^{-6}
Calcium (Ca)	lb/hr	NA	2.00×10^{-3}	1.02×10^{-4}
Chromium (Cr)	lb/hr	NA	7.25×10^{-5}	3.53×10^{-6}
Cobalt (Co)	lb/hr	NA	< 4.24×10^{-6}	< 4.15×10^{-7}
Copper (Cu)	lb/hr	NA	7.85×10^{-5}	1.16×10^{-5}
Iron (Fe)	lb/hr	NA	2.81×10^{-3}	4.69×10^{-5}
Lead (Pb)	lb/hr	NA	1.41×10^{-3}	1.44×10^{-4}
Magnesium (Mg)	lb/hr	NA	1.01×10^{-3}	1.96×10^{-5}
Manganese (Mn)	lb/hr	NA	9.86×10^{-5}	2.48×10^{-5}
Mercury (Hg)	lb/hr	< 5.52×10^{-5}	4.46×10^{-5}	1.71×10^{-5}
Nickel (Ni)	lb/hr	NA	3.79×10^{-5}	5.92×10^{-6}
Potassium (K)	lb/hr	NA	1.89×10^{-3}	2.00×10^{-4}
Selenium (Se)	lb/hr	NA	4.64×10^{-6}	8.41×10^{-7}
Silver (Ag)	lb/hr	NA	< 4.24×10^{-6}	< 4.62×10^{-7}
Sodium (Na)	lb/hr	NA	2.00×10^{-3}	6.81×10^{-4}
Thallium (Tl)	lb/hr	NA	2.15×10^{-5}	7.44×10^{-7}
Vanadium (V)	lb/hr	NA	6.62×10^{-6}	< 3.88×10^{-7}
Zinc (Zn)	lb/hr	NA	3.13×10^{-4}	2.40×10^{-5}
Total Chromatographable SVOC				
SVOC - Gravimetric Organics (>C-16)	lb/hr	NA	4.39×10^{-3}	1.63×10^{-4}
SVOC - Chromatographable Organics (C-7 through C-16)	lb/hr	NA	1.85×10^{-3}	3.96×10^{-4}
Targeted VOC via EPA Method 0030				
Volatile organic compounds (VOC)	---	NA	see Table 3-19 A/B	see Table 3-20 A/B

TABLE 3-1C
OVERALL SUMMARY OF ANALYTICAL RESULTS
FROM JCI/UPCYCLE TEST PROGRAM (continued)

Analyte(s)	Reporting Units	Hammermill Dryer Outlet	Kiln Scrubber Inlet	Kiln Scrubber Outlet
Total VOC via EPA Method 0040				
Methane (CH_4)	lb/hr	NA	4.80×10^{-4}	3.97×10^{-3}
Ethane (C_2H_6)	lb/hr	NA	$< 1.12 \times 10^{-4}$	$< 1.01 \times 10^{-3}$
C_2 as ethane	lb/hr	NA	2.72×10^{-3}	$< 1.01 \times 10^{-3}$
Propane (C_3H_8)	lb/hr	NA	$< 1.65 \times 10^{-4}$	$< 1.49 \times 10^{-3}$
C_3 as propane	lb/hr	NA	1.12×10^{-3}	$< 1.49 \times 10^{-3}$
Butane (C_4H_{10})	lb/hr	NA	$< 2.17 \times 10^{-4}$	$< 1.96 \times 10^{-3}$
Pentane (C_5H_{12})	lb/hr	NA	$< 2.70 \times 10^{-4}$	$< 2.43 \times 10^{-3}$
C_5 as pentane	lb/hr	NA	6.66×10^{-6}	4.51×10^{-5}
Hexane (C_6H_{14})	lb/hr	NA	$< 3.23 \times 10^{-4}$	$< 2.91 \times 10^{-3}$
C_6 as hexane	lb/hr	NA	$< 1.13 \times 10^{-7}$	$< 8.96 \times 10^{-7}$
Heptane (C_7H_{16})	lb/hr	NA	$< 3.75 \times 10^{-4}$	$< 3.38 \times 10^{-3}$
C_7 as heptane	lb/hr	NA	* 1.11×10^{-6}	* 8.61×10^{-6}
HCl, HBr, HF, NH_3, and Cl_2 via EPA Method 0050				
Hydrogen chloride (HCl)	lb/hr	NA	1.79×10^{-1}	$< 6.44 \times 10^{-5}$
Hydrogen bromide (HBr)	lb/hr	NA	1.43×10^{-3}	$< 1.22 \times 10^{-4}$
Hydrogen fluoride (HF)	lb/hr	NA	1.04×10^{-2}	$< 6.59 \times 10^{-5}$
Ammonia (NH_3)	lb/hr	NA	8.59×10^{-3}	$< 1.14 \times 10^{-5}$
Chlorine (Cl_2)	lb/hr	NA	1.18×10^{-3}	$< 4.61 \times 10^{-5}$
Hexavalent Chromium via EPA Method 0061				
Hexavalent Chromium (Cr^{6+})	lb/hr	NA	2.77×10^{-6}	$< 3.94 \times 10^{-7}$

< Indicates below minimum detection limit (or average calculated using one or more nondetected runs).
* See individual summary table for specific circumstances regarding analytical results data.

TABLE 3-2

SUMMARY OF SO_2, NO_x, CO, AND VOC EMISSIONS
JCI/UPCYCLE

HAMMERMILL DRYER OUTLET

RUN I.D.	HDO-M23-R1		HDO-M23-R2	AVERAGE
DATE	02/28/01		02/28/01	
TIME STARTED	14:19		18:26	
TIME ENDED	17:06		21:26	
SAMPLING PARAMETERS				
Metered Volume - dcf	151.493		192.467	171.980
Corrected Volume - dscf	156.392		199.872	178.132
Total Test Time - min	167.4		180	173.7
GAS PARAMETERS				
Gas Temperature - ° F	121		121	121
Oxygen - %	19.6		19.8	19.7
Carbon Dioxide - %	0.4		0.7	0.6
Moisture - %	5.8		6.6	6.2
GAS FLOWRATE				
Velocity - ft/sec	14.44		16.61	15.52
Actual Volume - acfm	1447		1665	1556
Standard Volume - dscfm	1209		1378	1294
SO_2 EMISSIONS				
Concentration - ppmdv	1.63	<	1.00 *	1.32 *
Mass Rate - lb/hr	0.02	<	0.01 *	0.02 *
NO_x EMISSIONS (as NO_2)				
Concentration - ppmdv	2.89		4.80	3.85
Mass Rate - lb/hr	0.03		0.05	0.04
CO EMISSIONS				
Concentration - ppmdv	98.61		10.72	54.67
Mass Rate - lb/hr	0.52		0.06	0.29
VOC EMISSIONS (as Propane)				
Concentration - ppmwv	38.95		3.42	21.19
Concentration - ppmdv	41.33		3.66	22.50
Mass Rate - lb/hr	0.34		0.03	0.19

Notes

< Indicates below minimum detection limit (or average calculated using one or more nondetected runs).

* The SO_2 concentration was corrected for system bias to a negative concentration. A nominal, or estimated detection limit of 1 ppm is provided and included in the two-run average.

TABLE 3-3

SUMMARY OF SO_2, NO_x, CO, AND VOC LOADINGS
JCI/UPCYCLE

KILN SCRUBBER INLET

RUN I.D.	SI-CEMS-R1	SI-CEMS-R2	SI-CEMS-R3	AVERAGE
DATE	03/14/01	03/14/01	03/14/01	
TIME STARTED	17:36	19:18	21:08	
TIME ENDED	18:36	20:18	22:08	
GAS PARAMETERS AND FLOWRATE				
Moisture - %	15.6 (1)	15.6 (1)	16.3 (2)	15.8
Standard Volume - dscfm	51 (1)	51 (1)	51 (2)	51
SO_2 LOADINGS				
Concentration - ppmdv	417.74	404.02	401.55	407.77
Mass Rate - lb/hr	0.21	0.21	0.20	0.21
NO_x LOADINGS (as NO_2)				
Concentration - ppmdv	527.08	487.96	504.68	506.57
Mass Rate - lb/hr	0.19	0.18	0.18	0.18
CO LOADINGS				
Concentration - ppmdv	1138.45	1174.14	1018.43	1110.34
Mass Rate - lb/hr	0.25	0.26	0.23	0.25
VOC LOADINGS (as Propane)				
Concentration - ppmwv	34.76	35.41	32.91	34.36
Concentration - ppmdv	41.19	41.96	39.34	40.83
Mass Rate - lb/hr	0.014	0.015	0.014	0.014

Notes
(1) Gas moisture and flowrate data taken from run 1 of the SW846 Method 0061 sampling (KSI-M0061-R1).
(2) Gas moisture and flowrate data taken from run 2 of the SW846 Method 0061 sampling (KSI-M0061-R2).

TABLE 3-4

SUMMARY OF SO_2, NO_x, CO, AND VOC EMISSIONS
JCI/UPCYCLE

KILN SCRUBBER OUTLET

RUN I.D.	SO-CEMS-R1	SO-CEMS-R4	SO-CEMS-R5	AVERAGE
DATE	03/14/01	03/14/01	03/14/01	
TIME STARTED	07:50	13:03	14:33	
TIME ENDED	08:50	14:03	15:33	
GAS PARAMETERS AND FLOWRATE				
Moisture - %	9.7 (1)	8.9 (2)	8.9 (2)	9.1
Standard Volume - dscfm	427 (1)	434 (2)	434 (2)	432
SO_2 EMISSIONS				
Concentration - ppmdv	0.20	0.24	0.21	0.22
Mass Rate - lb/hr	8.52E-04	1.04E-03	9.08E-04	9.33E-04
NO_x EMISSIONS (as NO_2)				
Concentration - ppmdv	41.42	65.95	85.01	64.13
Mass Rate - lb/hr	1.27E-01	2.05E-01	2.64E-01	1.99E-01
CO EMISSIONS				
Concentration - ppmdv	< 1.00 *	< 1.00 *	30.91	< 10.97 *
Mass Rate - lb/hr	1.86E-03	1.89E-03	5.85E-02	2.07E-02
VOC EMISSIONS (as Propane)				
Concentration - ppmwv	1.82	2.75	1.83	2.13
Concentration - ppmdv	2.01	3.02	2.01	2.35
Mass Rate - lb/hr	5.91E-03	8.99E-03	5.98E-03	6.96E-03

Notes
Runs 4 (SO-CEMS-R4) and 5 (SO-CEMS-R5) were used due to a CO spike above the span of the monitor during run 2 (SO-CEMS-R2) and loss of data for run 3 SO-CEMS-R3 due to FAC equipment malfunction.
(1) Gas moisture and flowrate data taken from run 1 of the New Jersey Method 5 sampling (KSO-NJ1-R1).
(2) Gas moisture and flowrate data taken from run 3 of the SW846 Method 0050 sampling (KSO-M0050-R3).
< Indicates below minimum detection limit (or average calculated using one or more nondetected runs).
* The CO concentration was corrected for system bias to a negative concentration. A nominal, or estimated detection limit of 1 ppm is provided and included in the two-run average.

TABLE 3-5

SUMMARY OF PARTICULATE LOADINGS
JCI/UPCYCLE

KILN SCRUBBER INLET

RUN I.D.	KSI-NJ1-R1	KSI-NJ1-R2	KSI-NJ1-R3	AVERAGE
DATE	03/14/01	03/14/01	03/14/01	
TIME STARTED	07:50	09:34	11:14	
TIME ENDED	08:50	10:34	12:14	
SAMPLING PARAMETERS				
Metered Volume - dcf	41.802	43.214	42.758	42.591
Corrected Volume - dscf	39.874	41.143	40.758	40.592
Total Test Time - min	60	60	60	60
% Isokinetics	106.7	109.2	107.6	107.8
GAS PARAMETERS				
Gas Temperature - ° F	724	686	678	696
Oxygen - %	7.7	8.6	8.1 *	8.1
Carbon Dioxide - %	15.1	15.6	15.3 *	15.3
Moisture - %	14.1	14.7	14.6	14.5
GAS FLOWRATE				
Velocity - ft/sec	6.52	6.41	6.39	6.44
Actual Volume - acfm	133	131	131	132
Standard Volume - dscfm	51	51	52	51
SUSPENDED PARTICULATE LOADINGS				
Conc. - gr/dscf	0.255	0.329	0.272	0.285
Mass Rate - lb/hr	0.11	0.14	0.12	0.13
CONDENSIBLE PARTICULATE LOADINGS				
Conc. - gr/dscf	0.115	0.119	0.112	0.115
Mass Rate - lb/hr	0.05	0.05	0.05	0.05
TOTAL PARTICULATE LOADINGS				
Conc. - gr/dscf	0.370	0.448	0.384	0.401
Mass Rate - lb/hr	0.16	0.20	0.17	0.18

Notes

* O_2 and CO_2 data were lost due to FAC equipment malfunction. Values shown are averages of runs 1 (KSI-NJ1-R1) and 2 (KSI-NJ1-R2).

TABLE 3-6

SUMMARY OF PARTICULATE EMISSIONS
JCI/UPCYCLE

KILN SCRUBBER OUTLET

RUN I.D.	KSO-NJ1-R1	KSO-NJ1-R2	KSO-NJ1-R3	AVERAGE
DATE	03/14/01	03/14/01	03/14/01	
TIME STARTED	07:50	09:34	11:14	
TIME ENDED	08:50	10:34	12:14	
SAMPLING PARAMETERS				
Metered Volume - dcf	58.673	59.258	59.654	59.195
Corrected Volume - dscf	56.322	56.509	56.873	56.568
Total Test Time - min	60	60	60	60
% Isokinetics	97.6	99.1	98.0	98.2
GAS PARAMETERS				
Gas Temperature - ° F	112	112	113	112
Oxygen - %	16.9	15.2	16.1 *	16.1
Carbon Dioxide - %	3.1	4.8	3.9 *	3.9
Moisture - %	9.7	10.6	8.6	9.6
GAS FLOWRATE				
Velocity - ft/sec	25.19	25.16	25.09	25.15
Actual Volume - acfm	514	514	512	514
Standard Volume - dscfm	427	422	430	426
SUSPENDED PARTICULATE EMISSIONS				
Conc. - gr/dscf	0.0018	0.0022	0.0020	0.0020
Mass Rate - lb/hr	0.0066	0.0080	0.0072	0.0073
CONDENSIBLE PARTICULATE EMISSIONS				
Conc. - gr/dscf	0.0022	0.0021	0.0014	0.0019
Mass Rate - lb/hr	0.0080	0.0075	0.0051	0.0069
TOTAL PARTICULATE EMISSIONS				
Conc. - gr/dscf	0.0040	0.0043	0.0033	0.0039
Mass Rate - lb/hr	0.0147	0.0155	0.0123	0.0142

Notes

* O_2 and CO_2 data were lost due to FAC equipment malfunction. Values shown are averages of runs 1 (KSO-NJ1-R1) and 2 (KSO-NJ1-R2).

TABLE 3-7

SUMMARY OF PCDD/PCDF EMISSIONS
JCI/UPCYCLE

HAMMERMILL DRYER OUTLET

RUN I.D.	HDO-M23-R1	HDO-M23-R2	AVERAGE
DATE	02/28/01	02/28/01	
TIME STARTED	14:19	18:26	
TIME ENDED	17:06	21:26	
SAMPLING PARAMETERS			
Metered Volume - dcf	151.493	192.467	171.980
Corrected Volume - dscf	156.392	199.872	178.132
Total Test Time - min	167.4	180.0	173.7
% Isokinetics	94.0	98.0	96.0
GAS PARAMETERS			
Gas Temperature - ° F	121	123	122
Oxygen - %	19.6	19.8	19.7
Carbon Dioxide - %	0.4	0.7	0.6
Moisture - %	5.8	6.6	6.2
GAS FLOWRATE			
Velocity - ft/sec	14.44	16.61	15.52
Actual Volume - acfm	1447	1665	1556
Standard Volume - dscfm	1209	1378	1294
PCDD EMISSIONS			
Conc. - ng/Nm^3 @7% O_2	0.23	0.84	0.53
Conc. - ngTEF/Nm^3 @7% O_2 (I-TEF/89)	0.00	0.00	0.00
Mass Rate - lb/hr	9.20E-11	3.10E-10	2.01E-10
Mass Rate - lbTEQ/hr (I-TEF/89)	9.20E-13	1.13E-12	1.03E-12
PCDF EMISSIONS			
Conc. - ng/Nm^3 @7% O_2	1.06	0.00	0.53
Conc. - ngTEF/Nm^3 @7% O_2 (I-TEF/89)	0.10	0.00	0.05
Mass Rate - lb/hr	4.29E-10	0.00E+00	2.15E-10
Mass Rate - lbTEQ/hr (I-TEF/89)	4.23E-11	0.00E+00	2.11E-11
PCDD + PCDF EMISSIONS			
Conc. - ng/Nm^3 @7% O_2	1.28	0.84	1.06
Conc. - ngTEF/Nm^3 @7% O_2 (I-TEF/89)	0.11	0.00	0.05
Mass Rate - lb/hr	5.21E-10	3.10E-10	4.16E-10
Mass Rate - lbTEQ/hr (I-TEF/89)	4.32E-11	1.13E-12	2.22E-11

Notes
Furan emissions were below detection limits for all species during HDO-M23-R2.

TABLE 3-8

SUMMARY OF PCDD/PCDF LOADINGS
JCI/UPCYCLE

KILN SCRUBBER INLET

RUN I.D.	KSI-M23-R2	KSI-M23-R3	KSI-M23-R4	AVERAGE
DATE	03/15/01	03/15/01	03/15/01	
TIME STARTED	07:19	11:26	16:12	
TIME ENDED	10:19	14:26	20:30	
SAMPLING PARAMETERS				
Metered Volume - dcf	120.308	118.469	118.502	119.093
Corrected Volume - dscf	114.759	112.238	112.371	113.123
Total Test Time - min	180	180	180	180
% Isokinetics	103.7	102.8	101.4	102.6
GAS PARAMETERS				
Gas Temperature - ° F	661	658	652	657
Oxygen - %	9.2	9.7	9.2	9.4
Carbon Dioxide - %	15.7	16.2	16.4	16.1
Moisture - %	15.9	15.3	15.3	15.5
GAS FLOWRATE				
Velocity - ft/sec	6.21	6.06	6.11	6.13
Actual Volume - acfm	127	124	125	125
Standard Volume - dscfm	50	49	50	50
PCDD LOADINGS				
Conc. - ng/Nm^3 @7% O_2	267.88	406.45	293.78	322.70
Conc. - ngTEF/Nm^3 @7% O_2 (I-TEF/89)	12.28	16.11	13.52	13.97
Mass Rate - lb/hr	3.94E-08	5.67E-08	4.33E-08	4.65E-08
Mass Rate - lbTEQ/hr (I-TEF/89)	1.81E-09	2.25E-09	1.99E-09	2.02E-09
PCDF LOADINGS				
Conc. - ng/Nm^3 @7% O_2	239.34	434.70	221.25	298.43
Conc. - ngTEF/Nm^3 @7% O_2 (I-TEF/89)	19.94	27.98	21.18	23.03
Mass Rate - lb/hr	3.52E-08	6.06E-08	3.26E-08	4.28E-08
Mass Rate - lbTEQ/hr (I-TEF/89)	2.94E-09	3.90E-09	3.13E-09	3.32E-09
PCDD + PCDF LOADINGS				
Conc. - ng/Nm^3 @7% O_2	507.22	841.15	515.03	621.14
Conc. - ngTEF/Nm^3 @7% O_2 (I-TEF/89)	32.22	44.10	34.70	37.00
Mass Rate - lb/hr	7.47E-08	1.17E-07	7.60E-08	8.93E-08
Mass Rate - lbTEQ/hr (I-TEF/89)	4.74E-09	6.15E-09	5.12E-09	5.34E-09

TABLE 3-9

SUMMARY OF PCDD/PCDF EMISSIONS
JCI/UPCYCLE

KILN SCRUBBER OUTLET

RUN I.D.	KSO-M23-R2	KSO-M23-R3	KSO-M23-R4	AVERAGE
DATE	03/15/01	03/15/01	03/15/01	
TIME STARTED	07:19	11:26	16:12	
TIME ENDED	10:19	14:26	20:30	
SAMPLING PARAMETERS				
Metered Volume - dcf	160.487	172.786	173.403	168.892
Corrected Volume - dscf	154.180	164.016	164.238	160.812
Total Test Time - min	180	180	180	180
% Isokinetics	100.6	100.6	99.4	100.2
GAS PARAMETERS				
Gas Temperature - ° F	114	116	117	116
Oxygen - %	17.0	17.1	17.1	17.1
Carbon Dioxide - %	3.5	3.6	3.6	3.5
Moisture - %	9.1	8.7	9.0	8.9
GAS FLOWRATE				
Velocity - ft/sec	22.17	23.57	23.98	23.24
Actual Volume - acfm	453	481	490	475
Standard Volume - dscfm	378	402	408	396
PCDD EMISSIONS				
Conc. - ng/Nm^3 @7% O_2	1.25	1.34	1.77	1.46
Conc. - ngTEF/Nm^3 @7% O_2 (I-TEF/89)	0.02	0.02	0.02	0.02
Mass Rate - lb/hr	4.61E-10	5.09E-10	6.83E-10	5.51E-10
Mass Rate - lbTEQ/hr (I-TEF/89)	5.61E-12	8.04E-12	8.21E-12	7.29E-12
PCDF EMISSIONS				
Conc. - ng/Nm^3 @7% O_2	1.61	2.10	2.28	2.00
Conc. - ngTEF/Nm^3 @7% O_2 (I-TEF/89)	0.05	0.07	0.07	0.07
Mass Rate - lb/hr	5.91E-10	7.98E-10	8.76E-10	7.55E-10
Mass Rate - lbTEQ/hr (I-TEF/89)	1.89E-11	2.77E-11	2.88E-11	2.51E-11
PCDD + PCDF EMISSIONS				
Conc. - ng/Nm^3 @7% O_2	2.86	3.44	4.05	3.45
Conc. - ngTEF/Nm^3 @7% O_2 (I-TEF/89)	0.07	0.09	0.10	0.09
Mass Rate - lb/hr	1.05E-09	1.31E-09	1.56E-09	1.31E-09
Mass Rate - lbTEQ/hr (I-TEF/89)	2.45E-11	3.57E-11	3.70E-11	3.24E-11

TABLE 3-10A
(CONTINUED ON TABLE 3-10B)

SUMMARY OF SVOC LOADINGS
JCI/UPCYCLE

KILN SCRUBBER INLET

RUN I.D.	KSI-M23-R2	KSI-M23-R3	KSI-M23-R4	AVERAGE
DATE	03/15/01	03/15/01	03/15/01	
TIME STARTED	07:19	11:26	16:12	
TIME ENDED	10:19	14:26	20:30	
SAMPLING PARAMETERS				
Metered Volume - dcf	120.308	118.469	118.502	119.093
Corrected Volume - dscf	114.759	112.238	112.371	113.123
Total Test Time - min	180	180	180	180
% Isokinetics	103.7	102.8	101.4	102.6
GAS PARAMETERS				
Gas Temperature - ° F	661	658	652	657
Oxygen - %	9.2	9.7	9.2	9.4
Carbon Dioxide - %	15.7	16.2	16.4	16.1
Moisture - %	15.9	15.3	15.3	15.5
GAS FLOWRATE				
Velocity - ft/sec	6.21	6.06	6.11	6.13
Actual Volume - acfm	127	124	125	125
Standard Volume - dscfm	50	49	50	50
SVOC LOADINGS - lb/hr				
Phenol	1.38E-05	7.4378E-06	9.096E-06	1.01E-05
bis(2-Chloroethyl)ether	< 1.17E-07	< 1.2181E-07	< 1.283E-07	< 1.22E-07
2-Chlorophenol	8.62E-06	4.0161E-06	6.783E-06	6.47E-06
1,3-Dichlorobenzene	1.56E-06	J 1.0018E-06	1.476E-06	J 1.35E-06
1,4-Dichlorobenzene	3.27E-06	1.6155E-06	2.272E-06	2.39E-06
1,2-Dichlorobenzene	2.24E-06	1.3894E-06	2.018E-06	1.88E-06
2,2'-oxybis(1-Chloropropane)	< 8.79E-08	< 9.1501E-08	< 9.637E-08	< 9.19E-08
Benzyl alcohol	2.52E-06	1.313E-05	3.048E-06	6.23E-06
2-Methylphenol	J 3.01E-07	J 4.237E-07	J 2.247E-07	J 3.17E-07
3/4-Methylphenol	J 1.14E-06	J 9.9368E-07	J 8.005E-07	J 9.78E-07
N-Nitroso-di-propylamine	< 1.54E-07	< 1.6085E-07	< 1.691E-07	< 1.61E-07
Hexachloroethane	< 1.59E-07	< 1.6552E-07	< 1.744E-07	< 1.66E-07
Nitrobenzene	2.37E-06	1.83E-06	2.353E-06	2.18E-06
Isophorone	< 6.24E-08	< 6.7023E-08	< 6.503E-08	< 6.48E-08
2-Nitorphenol	4.15E-06	2.4099E-06	3.697E-06	3.42E-06
2,4-Dimethylphenol	< 1.05E-07	< 1.119E-07	< 1.088E-07	< 1.08E-07
bis(2-Chloroethoxy)methane	< 1.05E-07	< 1.1306E-07	< 1.094E-07	< 1.09E-07
2,4-Dichlorophenol	2.90E-06	1.4762E-06	2.617E-06	2.33E-06
1,2,4-Trichlorobenzene	2.53E-06	1.4395E-06	1.909E-06	1.96E-06
Naphthalene	2.84E-05	1.7489E-05	2.189E-05	2.26E-05
4-Chloroaniline	< 9.48E-08	< 1.0199E-07	< 9.873E-08	< 9.85E-08
Hexachlorobutadiene	< 1.60E-07	< 1.7134E-07	< 1.661E-07	< 1.66E-07
4-Chloro-3-methylphenol	< 1.16E-07	< 1.2472E-07	< 1.206E-07	< 1.21E-07
2-Methylnaphthalene	J 8.49E-07	J 6.4983E-07	J 6.19E-07	J 7.06E-07
Hexechlorocyclopentadiene	< 1.56E-07	< 1.7251E-07	< 1.673E-07	< 1.65E-07
2,4,6-Trichlorophenol	3.84E-06	2.5288E-06	3.806E-06	3.39E-06
2,4,5-Trichlorophenol	J 2.49E-07	J 1.4104E-07	J 1.579E-07	J 1.83E-07
2-Chloronaphthalene	J 4.34E-07	J 5.0821E-07	J 6.089E-07	J 5.17E-07
2-Nitoraniline	< 1.85E-07	< 2.0573E-07	< 1.992E-07	< 1.97E-07
Dimethylphthalate	< 5.26E-08	< 5.8281E-08	< 5.616E-08	< 5.57E-08
2,6-Dinitrotoluene	< 2.29E-07	< 2.5469E-07	< 2.465E-07	< 2.43E-07
2,4-Dinitrotoluene	< 1.68E-07	< 1.865E-07	< 1.803E-07	< 1.78E-07

TABLE 3-10B
(TABLE 3-10A CONTINUED)

SUMMARY OF SVOC LOADINGS
JCI/UPCYCLE

KILN SCRUBBER INLET

RUN I.D.		KSI-M23-R2		KSI-M23-R3		KSI-M23-R4		AVERAGE
DATE		03/15/01		03/15/01		03/15/01		
TIME STARTED		07:19		11:26		16:12		
TIME ENDED		10:19		14:26		20:30		
SVOC LOADINGS - lb/hr								
Hexachlorobenzene	<	2.01E-07	<	2.1331E-07	<	2.046E-07	<	2.06E-07
Pentachlorophenol	<	3.31E-07	<	3.5143E-07	<	3.364E-07	<	3.40E-07
Phenanthrene		5.44E-06		3.9234E-06		4.559E-06		4.64E-06
Anthracene	J	1.47E-07	J	1.5386E-07	J	9.518E-08	J	1.32E-07
Di-n-butylphthalate	BJ	5.61E-08	BJ	3.4386E-08	BJ	8.454E-08	BJ	5.83E-08
Fluoranthene		2.57E-06		2.3493E-06		2.419E-06		2.45E-06
Pyrene	J	1.15E-06	J	1.1021E-06	J	8.827E-07	J	1.05E-06
Butylbenzylphthalate	<	2.24E-07	<	2.5877E-07	<	2.134E-07	<	2.32E-07
3,3'-Dichlorobenzidine	<	1.00E-06	<	1.1592E-06	<	9.572E-07	<	1.04E-06
bis(2-Ethylhexyl)phthalate	J	2.65E-07	J	8.847E-07	J	5.463E-07	J	5.65E-07
Benzo(a)anthracene	<	2.15E-07	<	2.4769E-07	<	2.046E-07	<	2.22E-07
Chrysene	J	7.79E-07	J	7.2326E-07	J	7.195E-07	J	7.41E-07
Di-n-octylphthalate	<	2.76E-07	<	3.5551E-07	<	2.519E-07	<	2.94E-07
Benzo(b)fluoranthene	<	4.61E-07	<	5.9504E-07	<	4.209E-07	<	4.92E-07
Benzo(k)fluoranthene	<	5.33E-07	<	6.8829E-07	<	4.866E-07	<	5.69E-07
Benzo(a)pyrene	<	5.94E-07	<	7.6756E-07	<	5.427E-07	<	6.35E-07
Indeno(1,2,3-cd)pyrene	<	1.09E-06	<	1.4016E-06	<	9.915E-07	<	1.16E-06
Dibenz(a,h)anthracene	<	1.43E-06	<	1.8411E-06	<	1.302E-06	<	1.52E-06
Benzo(g,h,i)perylene	<	1.29E-06	<	1.6616E-06	<	1.175E-06	<	1.37E-06
TOP 20 TENTATIVELY IDENTIFIED COMPOUNDS								
Benzaldehyde		4.28E-05		1.24E-05		2.57E-05		2.70E-05
Benzonitrile		1.65E-04		3.10E-05		9.08E-05		9.57E-05
Benzofuran		9.54E-06		N/A		5.44E-06		N/A
Pyridinecarbonitrile Isomers (Total)		1.21E-05		2.51E-06		7.15E-06		7.27E-06
Methylbenzaldehyde Isomers (Total)		1.34E-05		2.80E-06		7.69E-06		7.97E-06
Benzoic Acid		7.61E-05		1.78E-05		4.88E-05		4.76E-05
Benzothiophene		5.96E-06		N/A		N/A		N/A
Benzenedicarbonitrile Isomers (Total)		7.69E-06		5.13E-06		4.67E-06		5.83E-06
Biphenyl		1.13E-05		7.29E-06		8.16E-06		8.91E-06
1H-Isoindole-1,3(2H)-dione		4.79E-05		3.62E-05		4.48E-05		4.30E-05
9H-Fluoren-9-one		1.30E-05		7.87E-06		1.01E-05		1.03E-05
Acetophenone		N/A		3.56E-06		1.04E-05		N/A
Isoquinolone		N/A		3.73E-06		N/A		N/A
1,8-Naphthalic Anhydride		N/A		2.33E-06		N/A		N/A
Chlorobenzonitrile Isomers (Total)		N/A		N/A		4.43E-06		N/A
Anthracenedione		N/A		N/A		5.03E-06		N/A
Total Unknown Heterocyclic Compounds		1.92E-05		6.18E-06		9.05E-06		1.15E-05
Total Substituted Benzene		N/A		7.75E-06		2.06E-05		N/A
Total Substituted Hydrocarbons		6.88E-06		N/A		N/A		N/A
Total Unknowns		8.16E-05		3.38E-05		4.92E-05		5.49E-05

Notes
< Indicates below analytical detection limit (or average calculated using one or more nondetected runs).
(M) Estimated maximum potential concentration.
(B) Present in blank
(J) Detected but below the quantitation limit; quantity is estimated.
(E) Estimated value - outside of calibration range of the instrument.
(S) Saturated - in excess of the normal dynamic range of the instrument.
(N/A) Not identified as one of the top 20 tentatively identified compounds.

TABLE 3-11A
(CONTINUED ON TABLE 3-11B)

SUMMARY OF SVOC EMISSIONS
JCI/UPCYCLE

KILN SCRUBBER OUTLET

RUN I.D.	KSO-M23-R2	KSO-M23-R3	KSO-M23-R4	AVERAGE
DATE	03/15/01	03/15/01	03/15/01	
TIME STARTED	07:19	11:26	16:12	
TIME ENDED	10:19	14:26	20:30	
SAMPLING PARAMETERS				
Metered Volume - dcf	160.487	172.786	173.403	168.892
Corrected Volume - dscf	154.180	164.016	164.238	160.812
Total Test Time - min	180	180	180	180
% Isokinetics	100.6	100.6	99.4	100.2
GAS PARAMETERS				
Gas Temperature - ° F	114	116	117	116
Oxygen - %	17.0	17.1	17.1	17.1
Carbon Dioxide - %	3.5	3.6	3.6	3.5
Moisture - %	9.1	8.7	9.0	8.9
GAS FLOWRATE				
Velocity - ft/sec	22.17	23.57	23.98	23.24
Actual Volume - acfm	453	481	490	475
Standard Volume - dscfm	378	402	408	396
SVOC EMISSIONS - lb/hr				
Phenol	< 7.69E-07	< 6.3578E-07	< 6.368E-07	< 6.81E-07
bis(2-Chloroethyl)ether	< 1.18E-06	< 9.6988E-07	< 9.749E-07	< 1.04E-06
2-Chlorophenol	< 9.25E-07	< 7.6228E-07	< 7.648E-07	< 8.17E-07
1,3-Dichlorobenzene	< 5.71E-07	< 4.7035E-07	< 4.727E-07	< 5.05E-07
1,4-Dichlorobenzene	< 5.58E-07	< 4.6061E-07	< 4.628E-07	< 4.94E-07
1,2-Dichlorobenzene	< 6.10E-07	< 5.0278E-07	< 5.055E-07	< 5.39E-07
2,2'-oxybis(1-Chloropropane)	< 8.86E-07	< 7.266E-07	< 7.32E-07	< 7.82E-07
Benzyl alcohol	< 1.51E-06	J 1.2651E-06	J 1.694E-06	< 1.49E-06
2-Methylphenol	< 1.04E-06	J 1.6543E-07	< 8.6E-07	< 6.89E-07
3/4-Methylphenol	< 9.80E-07	J 1.4273E-07	< 8.108E-07	< 6.45E-07
N-Nitroso-di-propylamine	< 1.55E-06	< 1.2813E-06	< 1.287E-06	< 1.37E-06
Hexachloroethane	< 1.60E-06	< 1.3202E-06	< 1.326E-06	< 1.42E-06
Nitrobenzene	< 8.28E-07	< 6.8768E-07	< 6.696E-07	< 7.28E-07
Isophorone	< 5.10E-07	< 4.2169E-07	< 4.136E-07	< 4.48E-07
2-Nitorphenol	< 1.47E-06	< 1.2229E-06	J 2.068E-07	< 9.68E-07
2,4-Dimethylphenol	< 8.50E-07	< 7.0714E-07	< 6.893E-07	< 7.49E-07
bis(2-Chloroethoxy)methane	< 8.57E-07	< 7.1038E-07	< 6.926E-07	< 7.53E-07
2,4-Dichlorophenol	< 1.03E-06	< 8.5311E-07	< 8.305E-07	< 9.04E-07
1,2,4-Trichlorobenzene	< 9.38E-07	< 7.785E-07	< 7.583E-07	< 8.25E-07
Naphthalene	J 4.97E-07	J 4.2818E-07	J 3.578E-07	J 4.28E-07
4-Chloroaniline	< 7.72E-07	< 6.4226E-07	< 6.27E-07	< 6.81E-07
Hexachlorobutadiene	< 1.30E-06	< 1.0802E-06	< 1.054E-06	< 1.15E-06
4-Chloro-3-methylphenol	< 9.44E-07	< 7.8499E-07	< 7.648E-07	< 8.31E-07
2-Methylnaphthalene	J 9.44E-07	J 1.1256E-06	J 1.047E-06	J 1.04E-06
Hexechlorocyclopentadiene	< 1.18E-06	< 9.8935E-07	< 9.618E-07	< 1.05E-06
2,4,6-Trichlorophenol	< 1.19E-06	< 9.9583E-07	< 9.684E-07	< 1.05E-06
2,4,5-Trichlorophenol	< 1.20E-06	< 9.9908E-07	< 9.716E-07	< 1.06E-06
2-Chloronaphthalene	< 5.03E-07	< 4.2169E-07	< 4.103E-07	< 4.45E-07
2-Nitoraniline	< 1.41E-06	< 1.1775E-06	< 1.146E-06	< 1.24E-06
Dimethylphthalate	< 3.99E-07	< 3.3411E-07	< 3.25E-07	< 3.53E-07
2,6-Dinitrotoluene	< 1.75E-06	< 1.4597E-06	< 1.418E-06	< 1.54E-06
2,4-Dinitrotoluene	< 1.28E-06	< 1.0672E-06	< 1.037E-06	< 1.13E-06

TABLE 3-11B
(TABLE 3-11A CONTINUED)

SUMMARY OF SVOC EMISSIONS
JCI/UPCYCLE

KILN SCRUBBER OUTLET

RUN I.D.		KSO-M23-R2		KSO-M23-R3		KSO-M23-R4		AVERAGE
DATE		03/15/01		03/15/01		03/15/01		
TIME STARTED		07:19		11:26		16:12		
TIME ENDED		10:19		14:26		20:30		
SVOC EMISSIONS - lb/hr								
Hexachlorobenzene	<	1.48E-06	<	1.3202E-06	<	1.329E-06	<	1.38E-06
Pentachlorophenol	<	2.43E-06	<	2.1701E-06	<	2.189E-06	<	2.26E-06
Phenanthrene	J	1.27E-07	<	3.5033E-07	<	3.545E-07	<	2.77E-07
Anthracene	<	4.19E-07	<	3.7303E-07	<	3.742E-07	<	3.89E-07
Di-n-butylphthalate	BJ	2.56E-07	BJ	2.7248E-07	BJ	4.431E-07	BJ	3.24E-07
Fluoranthene	<	3.70E-07	<	3.2762E-07	J	2.232E-07	<	3.07E-07
Pyrene	J	4.51E-07	J	3.4708E-07	J	5.482E-07	J	4.49E-07
Butylbenzylphthalate	<	9.87E-07	J	1.0056E-07		2.237E-05	<	7.82E-06
3,3'-Dichlorobenzidine	<	4.42E-06	<	4.4245E-06	<	5.075E-06	<	4.64E-06
bis(2-Ethylhexyl)phthalate	J	6.54E-06	J	3.646E-06		1.825E-05	J	9.48E-06
Benzo(a)anthracene	<	9.44E-07	<	9.4393E-07	<	1.083E-06	<	9.91E-07
Chrysene	<	1.05E-06	<	1.0575E-06	<	1.211E-06	<	1.11E-06
Di-n-octylphthalate	<	9.90E-07	<	9.2772E-07	<	1.096E-06	<	1.00E-06
Benzo(b)fluoranthene	<	1.66E-06	<	1.5505E-06	<	1.832E-06	<	1.68E-06
Benzo(k)fluoranthene	<	1.91E-06	<	1.7938E-06	<	2.117E-06	<	1.94E-06
Benzo(a)pyrene	<	2.13E-06	<	1.9982E-06	<	2.363E-06	<	2.16E-06
Indeno(1,2,3-cd)pyrene	<	3.90E-06	<	3.6492E-06	<	4.313E-06	<	3.95E-06
Dibenz(a,h)anthracene	<	5.12E-06	<	4.7943E-06	<	5.666E-06	<	5.19E-06
Benzo(g,h,i)perylene	<	4.62E-06	<	4.3272E-06	<	5.114E-06	<	4.69E-06
TOP 20 TENTATIVELY IDENTIFIED COMPOUNDS								
Benzaldehyde		1.33E-05		9.41E-06		9.19E-06		1.06E-05
Acetophenone		6.82E-06		N/A		N/A		N/A
Phenyl Ketones (Total)		1.35E-04		N/A		N/A		N/A
Siloxane		N/A		N/A		N/A		N/A
Total Branched Alkanes		2.73E-05		2.72E-05		2.46E-05		2.64E-05
Total Substituted Benzene		6.82E-06		N/A		N/A		N/A
Total Substituted Hydrocarbons		N/A		2.66E-05		1.74E-05		N/A
Total Unsaturated Hydrocarbons		5.00E-05		N/A		N/A		N/A
Total Unknowns		2.30E-05		2.25E-04		1.14E-04		1.20E-04

Notes
< Indicates below minimum detection limit (or average calculated using one or more nondetected runs).
(M) Estimated maximum potential concentration.
(B) Present in blank
(J) Detected but below the quantitation limit; quantity is estimated.
(E) Estimated value - outside of calibration range of the instrument.
(S) Saturated - in excess of the normal dynamic range of the instrument.
(N/A) Not identified as one of the top 20 tentatively identified compounds.

TABLE 3-12

SUMMARY OF PCB LOADINGS
JCI/UPCYCLE

KILN SCRUBBER INLET

RUN I.D.	KSI-M23-R2		KSI-M23-R3		KSI-M23-R4		AVERAGE
DATE	03/15/01		03/15/01		03/15/01		
TIME STARTED	07:19		11:26		16:12		
TIME ENDED	10:19		14:26		20:30		
SAMPLING PARAMETERS							
Metered Volume - dcf	120.308		118.469		118.502		119.093
Corrected Volume - dscf	114.759		112.238		112.371		113.123
Total Test Time - min	180		180		180		180
% Isokinetics	103.7		102.8		101.4		102.6
GAS PARAMETERS							
Gas Temperature - ° F	661		658		652		657
Oxygen - %	9.2		9.7		9.2		9.4
Carbon Dioxide - %	15.7		16.2		16.4		16.1
Moisture - %	15.9		15.3		15.3		15.5
GAS FLOWRATE							
Velocity - ft/sec	6.21		6.06		6.11		6.13
Actual Volume - acfm	124		124		125		124
Standard Volume - dscfm	50		49		50		50
PCB LOADINGS - lb/hr							
3,4,4',5-TetraCB (#81)	2.47E-09		2.91E-09		2.91E-09		2.76E-09
3,3',4,4'-TetraCB (#77)	E	2.86E-08	E	3.02E-08	E	2.98E-08	E	2.95E-08
2',3,4,4',5-PentaCB (#123)	E	3.31E-08	E	3.42E-08	E	4.25E-08	E	3.66E-08
2,3',4,4',5-PentaCB (#118)	SE	1.33E-07	SE	1.33E-07	E	1.62E-07	SE	1.43E-07
2,3,4,4',5-PentaCB (#114)	4.65E-09		4.72E-09		5.55E-09		4.97E-09
2,3,3',4,4'-PentaCB (#105)	E	3.08E-08	E	3.00E-08	E	3.30E-08	E	3.13E-08
3,3',4,4',5-Penta-CB (#126)	1.55E-09		2.01E-09		1.79E-09		1.78E-09
2,3',4,4',5,5'-HexaCB (#167)	5.67E-09		5.70E-09	E	7.63E-09	E	6.33E-09
2,3,3',4,4',5-HexaCB (#156)	E	7.63E-09	E	8.10E-09	E	9.46E-09	E	8.40E-09
2,3,3',4,4',5'-HexaCB (#157)	1.39E-09		1.42E-09		1.77E-09		1.53E-09
3,3',4,4',5,5'-HexaCB (#169)	M	3.35E-10	M	4.14E-10	M	3.25E-10	M	3.58E-10
2,2',3,4,4',5,5'-HeptaCB (#180)	BE	3.76E-08	BE	3.90E-08	BE	3.28E-08	BE	3.65E-08
2,2',3,3',4,4',5-HeptaCB (#170)	E	2.91E-08	E	3.08E-08	E	2.30E-08	E	2.76E-08
2,3,3',4,4',5,5'-HeptaCB (#180)	1.56E-09		1.85E-09		1.24E-09		1.55E-09
DecaCB (#209)	9.08E-09		9.03E-09	M	7.09E-09	M	8.40E-09
Total MonoCB	BSE	2.19E-08	BSE	1.51E-07	BE	1.96E-07	BSE	1.23E-07
Total DiCB	BSE	2.51E-07	BSE	2.18E-07	BSE	1.81E-07	BSE	2.17E-07
Total TriCB	BSE	3.90E-07	BSE	3.92E-07	BSE	7.63E-07	BSE	5.15E-07
Total TetraCB	BSE	1.38E-06	BSE	1.49E-06	BE	1.78E-06	BSE	1.55E-06
Total PentaCB	BSE	1.05E-06	BSE	8.63E-07	BE	8.93E-07	BSE	9.36E-07
Total HexaCB	BSE	4.84E-07	BE	4.80E-07	BE	4.54E-07	BSE	4.73E-07
Total HeptaCB	BE	2.02E-07	BE	2.05E-07	BE	2.02E-07	BE	2.03E-07
Total OctaCB	E	2.90E-08	E	2.93E-08	E	2.96E-08	E	2.93E-08
Total NonaCB	2.35E-08		2.38E-08		2.30E-08		2.34E-08

Notes

< Indicates below minimum detection limit (or average calculated using one or more nondetected runs).
(M) Estimated maximum potential concentration.
(B) Present in blank
(J) Detected but below the quantitation limit; quantity is estimated.
(E) Estimated value - outside of calibration range of the instrument.
(S) Saturated - in excess of the normal dynamic range of the instrument.

TABLE 3-13

SUMMARY OF PCB EMISSIONS
JCI/UPCYCLE

KILN SCRUBBER OUTLET

RUN I.D.		KSO-M23-R2		KSO-M23-R3		KSO-M23-R4		AVERAGE
DATE		03/15/01		03/15/01		03/15/01		
TIME STARTED		07:19		11:26		16:12		
TIME ENDED		10:19		14:26		20:30		
SAMPLING PARAMETERS								
Metered Volume - dcf		160.487		172.786		173.403		168.892
Corrected Volume - dscf		154.180		164.016		164.238		160.812
Total Test Time - min		180		180		180		180
% Isokinetics		100.6		100.6		99.4		100.2
GAS PARAMETERS								
Gas Temperature - ° F		114		116		117		116
Oxygen - %		17.0		17.1		17.1		17.1
Carbon Dioxide - %		3.5		3.6		3.6		3.5
Moisture - %		9.1		8.7		9.0		8.9
GAS FLOWRATE								
Velocity - ft/sec		22.17		23.57		23.98		23.24
Actual Volume - acfm		481		481		490		484
Standard Volume - dscfm		378		402		408		396
PCB EMISSIONS - lb/hr								
3,4,4',5-TetraCB (#81)	<	1.62E-10	J	3.89E-11	<	9.85E-11	<	9.99E-11
3,3',4,4'-TetraCB (#77)		3.57E-10		3.89E-10		4.92E-10		4.13E-10
2',3,4,4',5-PentaCB (#123)		2.69E-10		4.22E-10		6.89E-10		4.60E-10
2,3',4,4',5-PentaCB (#118)		1.10E-09		1.36E-09		2.86E-09		1.77E-09
2,3,4,4',5-PentaCB (#114)	<	1.30E-10	<	1.30E-11	<	6.57E-11	<	6.95E-11
2,3,3',4,4'-PentaCB (#105)	M	2.89E-10		3.57E-10		8.53E-10	M	5.00E-10
3,3',4,4',5-Penta-CB (#126)	<	1.62E-10	<	9.73E-12	<	6.57E-11	<	7.92E-11
2,3',4,4',5,5'-HexaCB (#167)	<	1.62E-10		5.51E-11	<	9.85E-11	<	1.05E-10
2,3,3',4,4',5-HexaCB (#156)	<	1.62E-10		6.81E-11		1.81E-10	<	1.37E-10
2,3,3',4,4',5'-HexaCB (#157)	<	1.30E-10	<	9.73E-12	<	6.57E-11	<	6.84E-11
3,3',4,4',5,5'-HexaCB (#169)	<	2.27E-10	<	1.30E-11	<	1.31E-10	<	1.24E-10
2,2',3,4,4',5,5'-HeptaCB (#180)	B	4.09E-10	B	1.43E-10	B	4.79E-10	B	3.44E-10
2,2',3,3',4,4',5-HeptaCB (#170)	M	3.89E-10		1.91E-10		4.92E-10	M	3.58E-10
2,3,3',4,4',5,5'-HeptaCB (#180)	<	2.27E-10	<	1.62E-11	<	1.31E-10	<	1.25E-10
DecaCB (#209)	<	6.82E-10	<	3.24E-11	<	2.95E-10	<	3.36E-10
Total MonoCB		8.11E-10	B	9.73E-10	B	2.13E-09	B	1.31E-09
Total DiCB		1.88E-09	B	1.27E-08	B	9.98E-09	B	8.18E-09
Total TriCB		5.65E-09	B	1.34E-08	B	9.95E-09	B	9.65E-09
Total TetraCB		6.30E-09	B	1.25E-08	B	1.55E-08	B	1.14E-08
Total PentaCB		8.39E-09	B	1.21E-08	B	2.02E-08	B	1.35E-08
Total HexaCB		4.01E-09	B	3.75E-09	B	7.97E-09	B	5.24E-09
Total HeptaCB		8.31E-10	B	1.06E-09	B	2.61E-09	B	1.50E-09
Total OctaCB		3.02E-10		2.92E-11		8.21E-11		1.38E-10
Total NonaCB	M	3.18E-09		3.24E-11	M	3.94E-11	M	1.08E-09

Notes
< Indicates below minimum detection limit (or average calculated using one or more nondetected runs).
(M) Estimated maximum potential concentration.
(B) Present in blank
(J) Detected but below the quantitation limit; quantity is estimated.
(E) Estimated value - outside of calibration range of the instrument.
(S) Saturated - in excess of the normal dynamic range of the instrument.

TABLE 3-14

SUMMARY OF METALS LOADINGS
JCI/UPCYCLE

KILN SCRUBBER INLET

RUN I.D.	KSI-M29-R1	KSI-M29-R2	KSI-M29-R3	AVERAGE
DATE	03/15/01	03/15/01	03/15/01	
TIME STARTED	08:02	10:32	13:16	
TIME ENDED	10:02	12:32	15:16	
SAMPLING PARAMETERS				
Metered Volume - dcf	82.078	80.064	86.185	82.776
Corrected Volume - dscf	79.143	76.210	81.714	79.022
Total Test Time - min	120	120	120	120
% Isokinetics	107.5	103.4	110.4	107.1
GAS PARAMETERS				
Gas Temperature - ° F	662	645	661	656
Oxygen - %	8.9	8.2	9.6	8.9
Carbon Dioxide - %	15.8	16.7	15.9	16.1
Moisture - %	15.0	15.1	15.2	15.1
GAS FLOWRATE				
Velocity - ft/sec	6.13	6.05	6.17	6.11
Actual Volume - acfm	125	123	126	125
Standard Volume - dscfm	50	50	50	50
METALS LOADINGS - (lb/hr)				
Aluminum	2.45E-03	2.12E-03	1.89E-03	2.15E-03
Antimony	9.20E-08	3.81E-06	7.29E-06	3.73E-06
Arsenic	2.86E-05	4.83E-05	1.93E-05	3.21E-05
Barium	2.40E-05	2.08E-05	1.83E-05	2.11E-05
Beryllium	< 4.22E-07	< 4.39E-07	< 4.11E-07	< 4.24E-07
Cadmium	5.09E-05	4.38E-05	3.76E-05	4.41E-05
Calcium	2.36E-03	2.07E-03	1.57E-03	2.00E-03
Chromium	5.08E-05	4.00E-05	1.27E-04	7.25E-05
Cobalt	< 4.22E-06	< 4.39E-06	< 4.11E-06	< 4.24E-06
Copper	8.72E-05	7.83E-05	7.01E-05	7.85E-05
Iron	2.70E-03	2.70E-03	3.02E-03	2.81E-03
Lead	1.63E-03	1.45E-03	1.14E-03	1.41E-03
Magnesium	1.16E-03	1.06E-03	8.06E-04	1.01E-03
Manganese	1.17E-04	9.41E-05	8.43E-05	9.86E-05
Nickel	1.91E-05	2.11E-05	7.36E-05	3.79E-05
Potassium	2.16E-03	2.01E-03	1.51E-03	1.89E-03
Selenium	5.53E-06	4.75E-06	3.65E-06	4.64E-06
Silver	< 4.22E-06	< 4.39E-06	< 4.11E-06	< 4.24E-06
Sodium	2.16E-03	2.04E-03	1.80E-03	2.00E-03
Thallium	1.11E-05	3.59E-05	1.76E-05	2.15E-05
Vanadium	7.69E-06	6.17E-06	5.99E-06	6.62E-06
Zinc	3.23E-04	3.00E-04	3.16E-04	3.13E-04
MERCURY LOADINGS				
Concentration @ 7% O_2 - ug/dscm	2.90E+02	2.37E+02	3.02E+02	2.76E+02
Mass Rate - lb/hr	4.69E-05	4.05E-05	4.64E-05	4.46E-05

Notes
< Indicates below minimum detection limit (or average calculated using one or more nondetected runs).

TABLE 3-15

SUMMARY OF METALS EMISSIONS
JCI/UPCYCLE

KILN SCRUBBER OUTLET

RUN I.D.	KSO-M29-R1	KSO-M29-R2	KSO-M29-R3	AVERAGE
DATE	03/15/01	03/15/01	03/15/01	
TIME STARTED	08:02	10:32	13:16	
TIME ENDED	10:02	12:32	15:16	
SAMPLING PARAMETERS				
Metered Volume - dcf	111.460	119.326	119.411	116.732
Corrected Volume - dscf	108.956	115.878	115.380	113.405
Total Test Time - min	120	120	120	120
% Isokinetics	105.9	104.4	107.4	105.9
GAS PARAMETERS				
Gas Temperature - ° F	114	115	116	115
Oxygen - %	17.0	16.3	17.5	16.9
Carbon Dioxide - %	3.4	3.7	3.3	3.5
Moisture - %	8.4	8.4	8.1	8.3
GAS FLOWRATE				
Velocity - ft/sec	22.13	23.94	23.13	23.07
Actual Volume - acfm	452	489	472	471
Standard Volume - dscfm	381	411	398	396
METALS EMISSIONS - (lb/hr)				
Aluminum	3.49E-05	3.48E-05	2.23E-05	3.06E-05
Antimony	8.28E-07	2.34E-08	2.69E-07	3.73E-07
Arsenic	7.07E-07	2.65E-06	5.88E-07	1.31E-06
Barium	1.10E-06	8.16E-07	8.16E-07	9.11E-07
Beryllium	< 4.62E-08	< 4.69E-08	< 4.56E-08	< 4.62E-08
Cadmium	1.32E-05	9.03E-06	4.38E-06	8.88E-06
Calcium	1.28E-04	9.16E-05	8.58E-05	1.02E-04
Chromium	3.68E-06	3.33E-06	3.57E-06	3.53E-06
Cobalt	3.19E-07	< 4.69E-07	< 4.56E-07	< 4.15E-07
Copper	1.10E-05	1.49E-05	8.83E-06	1.16E-05
Iron	6.43E-05	4.19E-05	3.44E-05	4.69E-05
Lead	1.39E-04	1.91E-04	1.02E-04	1.44E-04
Magnesium	2.38E-05	2.08E-05	1.40E-05	1.96E-05
Manganese	5.41E-05	9.80E-06	1.04E-05	2.48E-05
Nickel	1.76E-05	1.31E-07	3.65E-08	5.92E-06
Potassium	2.30E-04	2.20E-04	1.50E-04	2.00E-04
Selenium	8.32E-07	1.12E-06	5.70E-07	8.41E-07
Silver	< 4.62E-07	< 4.69E-07	< 4.56E-07	< 4.62E-07
Sodium	6.57E-04	7.97E-04	5.89E-04	6.81E-04
Thallium	5.32E-07	9.80E-07	7.20E-07	7.44E-07
Vanadium	2.40E-07	< 4.69E-07	< 4.56E-07	< 3.88E-07
Zinc	2.36E-05	2.54E-05	2.30E-05	2.40E-05
MERCURY EMISSIONS				
Concentration @ 7% O_2 - ug/dscm	9.36E+01	1.43E+01	1.75E+01	4.18E+01
Mass Rate - lb/hr	3.76E-05	7.31E-06	6.38E-06	1.71E-05

Notes
< Indicates below minimum detection limit (or average calculated using one or more nondetected runs).

TABLE 3-16

SUMMARY OF PARTICULATE AND MERCURY EMISSIONS
JCI/UPCYCLE

HAMMERMILL DRYER OUTLET

RUN I.D.	HDO-M5/101A-R1		HDO-M101A/5-R2		AVERAGE
DATE	02/28/01		02/28/01		
TIME STARTED	15:08		18:47		
TIME ENDED	17:06		20:47		
SAMPLING PARAMETERS					
Metered Volume - dcf	99.344		123.611		111.478
Corrected Volume - dscf	102.721		129.809		116.265
Total Test Time - min	118		120		119
% Isokinetics	96.2		91.6		93.9
GAS PARAMETERS					
Gas Temperature - ° F	120		125		123
Oxygen - %	19.6		19.8		19.7
Carbon Dioxide - %	0.4		0.7		0.6
Moisture - %	5.3		6.9		6.1
GAS FLOWRATE					
Velocity - ft/sec	13.36		17.81		15.58
Actual Volume - acfm	1339		1785		1562
Standard Volume - dscfm	1127		1471		1299
PARTICULATE EMISSIONS					
Conc. - gr/dscf	0.015		0.011		0.013
Mass Rate - lb/hr	0.14		0.14		0.14
MERCURY EMISSIONS					
Concentration gr/dscf	1.13E-05	<	1.19E-07	<	5.69E-06
Mass Rate - lb/hr	1.09E-04	<	1.50E-06	<	5.52E-05

Notes

< Indicates below minimum detection limit (or average calculated using one or more nondetected runs

TABLE 3-17

SUMMARY OF TOTAL CHROMOGRAPHABLE SVOC LOADINGS
JCI/UPCYCLE

KILN SCRUBBER INLET

RUN I.D.	KSI-MTCO-R1	KSI-MTCO-R2	KSI-MTCO-R3	AVERAGE
DATE	03/15/01	03/15-16/01	03/16/01	
TIME STARTED	17:25	22:51	02:43	
TIME ENDED	21:50	01:51	05:43	
SAMPLING PARAMETERS				
Metered Volume - dcf	119.575	120.287	121.161	120.341
Corrected Volume - dscf	113.956	114.662	115.596	114.738
Total Test Time - min	180	180	180	180
% Isokinetics	105.4	109.0	108.5	107.6
GAS PARAMETERS				
Gas Temperature - °F	652	660	644	652
Oxygen - %	8.9	8.8	9.6	9.1
Carbon Dioxide - %	16.4	16.4	16.3	16.4
Moisture - %	14.9	14.1	13.5	14.2
GAS FLOWRATE				
Velocity - ft/sec	5.91	5.74	5.69	5.78
Actual Volume - acfm	121	117	116	118
Standard Volume - dscfm	49	48	48	48
SEMIVOLATILE ORGANIC LOADINGS GRAVIMETRIC ORGANICS (C-17 AND ABOVE)				
Conc. - (gr/dscf)	4.02E-03	1.22E-02	1.57E-02	1.06E-02
Mass Rate - lb/hr	1.69E-03	4.99E-03	6.50E-03	4.39E-03
SEMIVOLATILE ORGANIC LOADINGS CHROMATOGRAPHABLE ORGANICS (>C-7 THRU <C-17)				
Conc. - (gr/dscf)	1.09E-03	6.17E-03	6.25E-03	4.50E-03
Mass Rate - lb/hr	4.56E-04	2.52E-03	2.59E-03	1.85E-03

TABLE 3-18

SUMMARY OF TOTAL CHROMOGRAPHABLE SVOC EMISSIONS
JCI/UPCYCLE

KILN SCRUBBER OUTLET

RUN I.D.	KSO-MTCO-R1		KSO-MTCO-R2		KSO-MTCO-R3	AVERAGE
DATE	03/15/01		03/15-16/01		03/16/01	
TIME STARTED	17:25		22:51		02:43	
TIME ENDED	21:50		01:51		05:43	
SAMPLING PARAMETERS						
Metered Volume - dcf	179.134		185.637		191.522	185.431
Corrected Volume - dscf	173.445		181.068		186.465	180.326
Total Test Time - min	180		180		180	180
% Isokinetics	102.6		103.7		105.4	103.9
GAS PARAMETERS						
Gas Temperature - °F	117		117		118	118
Oxygen - %	17.3		16.9		17.1	17.1
Carbon Dioxide - %	3.6		3.9		3.7	3.7
Moisture - %	8.7		8.4		8.9	8.7
GAS FLOWRATE						
Velocity - ft/sec	24.38		25.07		25.59	25.01
Actual Volume - acfm	498		512		523	511
Standard Volume - dscfm	417		431		436	428
SEMIVOLATILE ORGANIC LOADINGS GRAVIMETRIC ORGANICS (C-17 AND ABOVE)						
Conc. - (gr/dscf)	5.34E-05	<	8.52E-05	<	8.28E-05	4.43E-05
Mass Rate - lb/hr	1.91E-04	<	3.15E-04	<	3.09E-04	1.63E-04
SEMIVOLATILE ORGANIC LOADINGS CHROMATOGRAPHABLE ORGANICS (>C-7 THRU <C-17)						
Conc. - (gr/dscf)	3.65E-05		4.70E-04		2.98E-05	1.07E-04
Mass Rate - lb/hr	1.30E-04		1.74E-03		1.11E-04	3.96E-04

Notes

< Indicates below minimum detection limit (or average calculated using one or more nondetected runs).

TABLE 3-19A
(CONTINUED ON TABLE 3-19B)

SUMMARY OF TARGETED VOC LOADINGS
JCI/UPCYCLE

KILN SCRUBBER INLET

RUN I.D.	KSI-M0030-R2		KSI-M0030-R3		KSI-M0030-R4		AVERAGE	
DATE		03/14/01		03/15/01		03/15/01		
TIME STARTED		22:10		00:06		00:58		
TIME ENDED		22:50		00:46		01:58		
SAMPLING PARAMETERS								
Corrected Volume - dscf		0.779		0.722		0.713		0.738
Corrected Flow Rate - dscfm (1)		51		50		50		50
MASS RATE - lb/hr								
Dichlorodifluoromethane	<	1.04E-06	<	1.13E-06	<	3.09E-06	<	1.75E-06
Chloromethane	BEJ	9.07E-05	BEJ	1.62E-04	BEJ	1.54E-04	BEJ	1.36E-04
Vinyl Chloride	E	3.51E-05	E	4.41E-05	E	4.39E-05	E	4.10E-05
Bromomethane	BEJ	1.70E-05	B	8.34E-06	BEJ	2.85E-05	BEJ	1.79E-05
Chloroethane	E	1.57E-05		8.30E-06	E	4.01E-05	E	2.14E-05
Trichlorofluoromethane	<	6.20E-07	<	6.72E-07	<	1.83E-06	<	1.04E-06
1,1-Dichloroethene	<	1.33E-06	<	1.44E-06	<	3.95E-06	<	2.24E-06
Iodomethane	<	7.94E-07	<	8.60E-07	<	2.35E-06	<	1.33E-06
Carbon disulfide	E	3.45E-05	E	5.45E-05	E	4.28E-05	E	4.39E-05
Acetone	E	3.72E-04	E	3.00E-04	E	6.53E-04	E	4.42E-04
Allyl Chloride		1.43E-06		6.99E-06		1.07E-06		3.16E-06
Methylene chloride	B	1.15E-03	B	1.37E-03	BE	1.55E-03	BE	1.36E-03
Acrylonitrile	EJ	4.73E-04	E	6.70E-05	E	5.57E-04	EJ	3.66E-04
trans-1,2-Dichloroethene	<	8.70E-07	<	9.43E-07	<	2.58E-06	<	1.46E-06
1,1-Dichloroethane	<	6.92E-07	<	7.52E-07	<	2.05E-06	<	1.17E-06
Vinyl Acetate	<	1.12E-06	<	1.22E-06	<	3.33E-06	<	1.89E-06
2,2-Dichloropropane	<	7.32E-07	<	7.95E-07	<	2.17E-06	<	1.23E-06
cis-1,2-Dichloroethene	<	8.13E-07	<	8.83E-07	<	2.41E-06	<	1.37E-06
2-Butanone	E	2.84E-05		6.80E-06	E	3.04E-05	E	2.18E-05
Chloroform		2.62E-06		2.13E-06		2.55E-06		2.43E-06
Bromochloromethane		3.34E-06		1.34E-06		3.17E-06		2.62E-06
1,1,1-Trichloroethane	<	5.05E-07	<	5.48E-07	<	1.49E-06	<	8.48E-07
Carbon tetrachloride		4.28E-06		3.78E-06		3.73E-06		3.93E-06
1,1-Dichloropropene	<	7.34E-07	<	7.97E-07	<	2.17E-06	<	1.23E-06
Benzene	BE	4.23E-05	BE	5.12E-05	E	4.80E-05	BE	4.72E-05
1,2-Dichloroethane	<	8.02E-07	<	8.69E-07	<	2.36E-06	<	1.35E-06
Trichloroethene		9.96E-07		6.51E-07		9.00E-07		8.49E-07
1,2-Dichloropropane		7.19E-07	J	1.92E-07		5.10E-07	J	4.74E-07
Dibromomethane	<	1.63E-06	<	1.77E-06	<	4.81E-06	<	2.74E-06
Methyl Methacrylate		6.67E-06		3.41E-06		8.94E-06		6.34E-06
Bromodichloromethane		7.02E-07	J	3.30E-07		7.79E-07	J	6.04E-07
cis-1,3-Dichloropropene	<	6.69E-07	<	7.25E-07	<	1.97E-06	<	1.12E-06
4-Methyl-2-pentanone	<	1.86E-06	<	2.02E-06	<	5.51E-06	<	3.13E-06
Toluene	E	6.47E-05	E	7.05E-05	EJ	1.12E-04	EJ	8.25E-05

TABLE 3-19B
(TABLE 3-19A CONTINUED)

SUMMARY OF TARGETED VOC LOADINGS
JCI/UPCYCLE

KILN SCRUBBER INLET

RUN I.D.	KSI-M0030-R2	KSI-M0030-R3	KSI-M0030-R4	AVERAGE
DATE	03/14/01	03/15/01	03/15/01	
TIME STARTED	22:10	00:06	00:58	
TIME ENDED	22:50	00:46	01:58	
MASS RATE - lb/hr				
trans-1,3-Dichloropropene	< 8.05E-07	< 8.74E-07	< 2.37E-06	< 1.35E-06
1,1,2-Trichloroethane	< 1.35E-06	< 1.47E-06	< 4.00E-06	< 2.27E-06
Ethyl Methacrylate	< 1.79E-06	< 1.94E-06	< 5.29E-06	< 3.01E-06
Tetrachloroethene	J 3.98E-07	5.87E-07	J 3.80E-07	J 4.55E-07
1,3-Dichloropropane	< 7.37E-07	< 7.88E-07	< 2.22E-06	< 1.25E-06
2-Hexanone	8.23E-07	< 2.71E-06	8.25E-07	1.45E-06
Dibromochloromethane	< 9.09E-07	< 9.72E-07	< 2.74E-06	< 1.54E-06
1,2-Dibromoethane	< 1.01E-06	< 1.08E-06	< 3.05E-06	< 1.72E-06
Chlorobenzene	E 1.51E-05	E 2.61E-05	E 1.75E-05	E 1.96E-05
1,1,1,2-Tetrachloroethane	< 9.74E-07	< 1.04E-06	< 2.93E-06	< 1.65E-06
Ethylbenzene	1.42E-06	2.00E-06	1.41E-06	1.61E-06
m-/p-Xylene	4.93E-06	4.88E-06	4.80E-06	4.87E-06
o-Xylene	1.17E-06	1.25E-06	1.15E-06	1.19E-06
Styrene	3.51E-06	J 3.85E-07	2.91E-06	J 2.27E-06
Bromoform	< 1.77E-06	< 1.90E-06	< 5.35E-06	< 3.01E-06
Cumene	J 3.55E-07	J 4.49E-07	J 3.62E-07	J 3.89E-07
1,1,2,2-Tetrachloroethane	< 1.07E-06	< 1.15E-06	< 2.94E-06	< 1.72E-06
Bromobenzene	B 5.37E-07	B 5.13E-07	B 5.66E-07	B 5.39E-07
1,2,3-Trichloropropane	< 1.33E-06	< 1.43E-06	< 3.66E-06	< 2.14E-06
n-Propylbenzene	8.32E-07	1.10E-06	8.35E-07	9.22E-07
trans-1,4-Dichloro-2-butyne	< 3.44E-06	< 3.72E-06	< 9.49E-06	< 5.55E-06
2-Chlorotoluene	< 9.62E-07	< 1.03E-06	< 2.64E-06	< 1.54E-06
4-Chlorotoluene	< 9.49E-07	< 1.02E-06	< 2.60E-06	< 1.52E-06
1,3,5-Trimethylbenzene	4.42E-07	J 3.67E-07	4.64E-07	J 4.24E-07
tert-Butylbenzene	< 2.85E-07	< 3.06E-07	< 7.73E-07	< 4.54E-07
1,2,4-Trimethylbenzene	2.43E-06	3.15E-06	2.35E-06	2.64E-06
sec-Butylbenzene	J 8.66E-08	J 1.28E-07	J 1.02E-07	J 1.06E-07
p-Cymene	8.06E-07	6.69E-07	8.07E-07	7.61E-07
1,3-Dichlorobenzene	B 4.52E-06	B 4.00E-06	B 4.98E-06	B 4.50E-06
1,4-Dichlorobenzene	6.08E-06	5.94E-06	6.46E-06	6.16E-06
Benzyl chloride	1.98E-06	6.78E-07	2.41E-06	1.69E-06
n-Butylbenzene	6.93E-07	4.86E-07	8.53E-07	6.77E-07
1,2-Dichlorobenzene	B 5.43E-06	B 3.38E-06	B 5.67E-06	B 4.83E-06
1,2-Dibromo-3-chloropropane	< 3.79E-06	< 4.12E-06	< 1.04E-05	< 6.11E-06
1,2,4-Trichlorobenzene	B 2.49E-06	B 1.27E-06	B 4.93E-06	B 2.90E-06
Hexachlorobutadiene	< 1.17E-06	< 1.26E-06	< 3.23E-06	< 1.89E-06
Naphthalene	BE 2.25E-05	BE 2.05E-05	BE 4.00E-05	BE 2.77E-05
1,2,3-Trichlorobenzene	B 9.44E-07	B 4.49E-07	B 2.05E-06	B 1.15E-06
TOP 10 TENTATIVELY IDENTIFIED COMPOUNDS				
Thiophene	8.92E-05	1.06E-04	1.35E-04	1.10E-04
Furandione (Maleic Anhydride)	2.86E-05	3.19E-05	3.83E-05	3.30E-05
Unknowns	1.21E-05	1.49E-05	1.90E-05	1.53E-05
Pentene	4.61E-06	6.94E-06	6.59E-06	6.05E-06
Trichloroacetonitrile	4.18E-06	3.77E-06	N/A	N/A
Methylfuran Isomers	7.07E-06	5.00E-06	9.33E-06	7.13E-06
Cyanogen chloride	3.56E-06	N/A	3.42E-06	N/A
Cyclohexane	3.22E-06	6.07E-06	N/A	N/A
n-Methoxy-methylamine	2.30E-06	N/A	N/A	N/A
Methylthiophene Isomers	N/A	1.03E-05	1.82E-05	N/A
Benzonitrile	N/A	2.93E-06	5.10E-06	N/A

Notes
Because of poor surrogate recoveries in the samples from KSI-M0030-R1, the samples from KSI-M0030-R2, -R3, and -R4 were analyzed and reported.
(1) Gas flowrate data was taken from run 3 of Method 0010 sampling.
< Indicates below minimum detection limit (or average calculated using one or more nondetected runs).
(B) Present in laboratory blank.
(J) Detected but below the quantitation limit; quantity is estimated.
(E) Detected but above calibration range; quantity estimated.
(N/A) Not identified as one of the top 10 tentatively identified compounds.

TABLE 3-20A
(CONTINUED ON TABLE 3-20B)

SUMMARY OF TARGETED VOC EMISSIONS
JCI/UPCYCLE

KILN SCRUBBER OUTLET

RUN I.D.	KSO-M0030-R1		KSO-M0030-R2		KSO-M0030-R4		AVERAGE	
DATE		03/14/01		03/14/01		03/15/01		
TIME STARTED		21:08		22:10		00:58		
TIME ENDED		21:48		22:50		01:38		
SAMPLING PARAMETERS								
Corrected Volume - dscf		0.696		0.693		0.699		0.696
Corrected Flow Rate - dscfm (1)		366		366		354		362
MASS RATE - lb/hr								
Dichlorodifluoromethane	<	9.12E-06	<	8.74E-06	<	2.38E-05	<	1.39E-05
Chloromethane	BE	7.46E-05	B	2.43E-05	BJ	6.67E-04	BEJ	2.55E-04
Vinyl Chloride	<	1.54E-05	<	1.46E-05	<	4.00E-05	<	2.33E-05
Bromomethane	BJ	4.08E-05	BJ	3.74E-05	BJ	1.36E-04	BJ	7.14E-05
Chloroethane	<	2.90E-05	<	2.78E-05	<	7.57E-05	<	4.42E-05
Trichlorofluoromethane		4.59E-06	J	2.72E-06	J	2.41E-06	J	3.24E-06
1,1-Dichloroethene		6.26E-06	J	1.61E-06	J	2.68E-07	J	2.71E-06
Iodomethane		6.89E-06		1.05E-05		4.56E-06		7.33E-06
Carbon disulfide		4.65E-05		6.35E-06		5.36E-06		1.94E-05
Acetone	<	9.87E-05		2.67E-03		4.38E-03	<	2.39E-03
Allyl Chloride	<	1.03E-05	<	9.89E-06	<	2.69E-05	<	1.57E-05
Methylene chloride	B	8.19E-03	B	7.81E-03	B	1.15E-02	B	9.18E-03
Acrylonitrile	E	2.54E-04	<	1.21E-04		1.89E-05	<E	1.32E-04
trans-1,2-Dichloroethene	<	7.64E-06	<	7.32E-06	<	1.99E-05	<	1.16E-05
1,1-Dichloroethane	<	6.09E-06	<	5.83E-06	<	1.58E-05	<	9.25E-06
Vinyl Acetate	<	9.93E-06	<	9.51E-06	<	2.57E-05	<	1.51E-05
2,2-Dichloropropane	<	6.43E-06	<	6.16E-06	<	1.68E-05	<	9.78E-06
cis-1,2-Dichloroethene	<	7.15E-06	<	6.84E-06	<	1.86E-05	<	1.09E-05
2-Butanone		5.83E-05	<	4.40E-05	<	1.19E-04	<	7.37E-05
Chloroform		4.66E-06	J	1.82E-06	J	1.54E-06	J	2.67E-06
Bromochloromethane	J	2.23E-06	J	9.08E-07	J	2.55E-06	J	1.89E-06
1,1,1-Trichloroethane	<	4.43E-06	<	4.26E-06	<	1.15E-05	<	6.74E-06
Carbon tetrachloride	J	2.71E-06	J	2.30E-06	J	2.08E-06	J	2.37E-06
1,1-Dichloropropene	<	5.53E-06	<	5.44E-06	<	1.72E-05	<	9.38E-06
Benzene	B	1.36E-05	B	6.84E-06	B	5.63E-06	B	8.68E-06
1,2-Dichloroethane	<	6.04E-06	<	5.92E-06	<	1.87E-05	<	1.02E-05
Trichloroethene	<	7.90E-06	<	7.75E-06	<	2.46E-05	<	1.34E-05
1,2-Dichloropropane	<	6.55E-06	<	6.43E-06	<	2.04E-05	<	1.11E-05
Dibromomethane	<	1.23E-05	<	1.20E-05	<	3.82E-05	<	2.08E-05
Methyl Methacrylate	<	2.39E-05	<	2.35E-05	<	7.43E-05	<	4.06E-05
Bromodichloromethane	<	4.55E-06	<	4.47E-06	<	1.41E-05	<	7.71E-06
cis-1,3-Dichloropropene	<	5.03E-06	<	4.93E-06	<	1.56E-05	<	8.51E-06
4-Methyl-2-pentanone	<	1.41E-05	<	1.38E-05	<	4.37E-05	<	2.39E-05
Toluene	E	5.17E-03		6.09E-04	J	4.88E-04	EJ	2.09E-03

TABLE 3-20B
(TABLE 3-20A CONTINUED)

SUMMARY OF TARGETED VOC EMISSIONS
JCI/UPCYCLE

KILN SCRUBBER OUTLET

RUN I.D.	KSO-M0030-R1	KSO-M0030-R2	KSO-M0030-R4	AVERAGE
DATE	03/14/01	03/14/01	03/15/01	
TIME STARTED	21:08	22:10	00:58	
TIME ENDED	21:48	22:50	01:38	
MASS RATE - lb/hr				
trans-1,3-Dichloropropene	< 6.05E-06	< 5.95E-06	< 1.88E-05	< 1.03E-05
1,1,2-Trichloroethane	< 1.02E-05	< 9.99E-06	< 3.17E-05	< 1.73E-05
Ethyl Methacrylate	< 1.35E-05	< 1.32E-05	< 4.20E-05	< 2.29E-05
Tetrachloroethene	J 9.74E-07	J 9.77E-07	J 8.04E-07	J 9.19E-07
From Method 8260B				
2-Hexanone	< 1.78E-05	< 1.84E-05	< 5.98E-05	< 3.20E-05
Dibromochloromethane	< 6.34E-06	< 6.55E-06	< 2.15E-05	< 1.15E-05
1,2-Dibromoethane	< 7.08E-06	< 7.32E-06	< 2.40E-05	< 1.28E-05
Chlorobenzene	3.83E-06	J 7.68E-07	J 4.69E-07	J 1.69E-06
1,1,1,2-Tetrachloroethane	< 6.80E-06	< 7.03E-06	< 2.30E-05	< 1.23E-05
Ethylbenzene	J 2.16E-06	J 1.95E-06	J 1.61E-06	J 1.91E-06
m-/p-Xylene	8.28E-06	J 6.91E-06	J 5.90E-06	J 7.03E-06
o-Xylene	J 2.44E-06	J 1.68E-06	J 1.68E-06	J 1.93E-06
Styrene	J 1.25E-06	J 4.19E-07	J 5.36E-07	J 7.36E-07
Bromoform	< 1.24E-05	< 1.28E-05	< 4.20E-05	< 2.24E-05
Cumene	< 1.55E-06	< 1.58E-06	< 5.96E-06	< 3.03E-06
1,1,2,2-Tetrachloroethane	< 6.64E-06	< 6.76E-06	< 2.60E-05	< 1.31E-05
Bromobenzene	< 6.19E-06	< 6.31E-06	< 2.45E-05	< 1.23E-05
1,2,3-Trichloropropane	< 8.24E-06	< 8.38E-06	< 3.24E-05	< 1.63E-05
n-Propylbenzene	J 9.05E-07	J 5.59E-07	J 4.02E-07	J 6.22E-07
trans-1,4-Dichloro-2-butyne	< 2.13E-05	< 2.17E-05	< 8.40E-05	< 4.23E-05
2-Chlorotoluene	< 6.23E-06	< 6.01E-06	J 1.34E-07	<J 4.12E-06
4-Chlorotoluene	< 5.82E-06	< 5.92E-06	< 2.30E-05	< 1.16E-05
1,3,5-Trimethylbenzene	J 2.71E-06	J 1.54E-06	J 1.21E-06	J 1.82E-06
tert-Butylbenzene	< 1.76E-06	< 1.80E-06	< 6.82E-06	< 3.46E-06
1,2,4-Trimethylbenzene	9.33E-06	6.21E-06	4.29E-06	6.61E-06
sec-Butylbenzene	J 4.18E-07	< 1.42E-06	J 2.01E-07	<J 6.80E-07
p-Cymene	1.25E-06	J 4.89E-07	J 4.69E-07	J 7.37E-07
1,3-Dichlorobenzene	B 9.05E-07	BJ 7.68E-07	BJ 1.34E-07	BJ 6.02E-07
1,4-Dichlorobenzene	8.14E-06	J 1.82E-06	J 6.03E-07	J 3.52E-06
Benzyl chloride	J 1.32E-06	< 5.36E-06	J 2.68E-07	<J 2.32E-06
n-Butylbenzene	J 1.04E-06	J 4.19E-07	J 2.68E-07	J 5.77E-07
1,2-Dichlorobenzene	B 5.08E-06	BJ 6.98E-07	BJ 1.34E-07	BJ 1.97E-06
1,2-Dibromo-3-chloropropane	< 2.36E-05	< 2.40E-05	< 9.21E-05	< 4.66E-05
1,2,4-Trichlorobenzene	B 2.51E-05	BJ 2.51E-06	< 2.02E-05	<BJ 1.59E-05
Hexachlorobutadiene	< 7.20E-06	< 7.34E-06	< 2.85E-05	< 1.44E-05
Naphthalene	BE 5.31E-04	B 6.68E-05	B 1.82E-05	BE 2.05E-04
1,2,3-Trichlorobenzene	B 2.14E-05	BJ 9.77E-07	< 2.60E-05	<BJ 1.61E-05
TOP 10 TENTATIVELY IDENTIFIED COMPOUNDS				
Unknown Branched Alkanes	8.65E-05	4.43E-05	2.14E-05	5.07E-05
Benzonitrile	1.64E-05	N/A	4.96E-06	7.13E-06
Unknown Cyclic Alkanes	1.39E-05	N/A	N/A	N/A
Benzothiophene	1.37E-05	N/A	N/A	N/A
Methylbutane	1.25E-05	6.35E-06	1.03E-05	9.69E-06
Pentane	1.22E-05	6.49E-06	1.25E-05	1.04E-05
Phenyl Ketone	N/A	6.84E-06	2.75E-06	N/A
Methyl Propane	N/A	3.07E-06	N/A	N/A
Fluorotrimethylsilane	N/A	N/A	6.57E-06	N/A

Notes
Because of loss of data acquisition for the samples from KSO-M0030-R3, the samples from KSO-M0030-R1, -R2, and -R4 were analyzed and reported.
(1) Gas flowrate data was taken from run 3 of Method 0010 sampling.
< Indicates below minimum detection limit (or average calculated using one or more nondetected runs).
(B) Present in laboratory blank.
(J) Detected but below the quantitation limit; quantity is estimated.
(E) Detected but above calibration range; quantity estimated.
(N/A) Not identified as one of the top 10 tentatively identified compounds.

TABLE 3-21

SUMMARY OF TOTAL VOC LOADINGS

JCI/UPCYCLE
KILN SCRUBBER INLET

RUN I.D.		KSI-M0040-R1	KSI-M0040-R2	KSI-M0040-R3	AVERAGE
DATE		03/15-16/01	03/16/01	03/16/01	
TIME STARTED		23:22	00:34	01:45	
TIME ENDED		00:22	01:34	02:45	
SAMPLING PARAMETERS					
Corrected Volume - dscf		0.507	0.608	0.608	0.574
Corrected Flow Rate - dscfm		48 (1)	48 (1)	48 (2)	48
TOTAL VOC LOADINGS					
Methane	Conc. - ppmdv	3.93E+00	4.71E+00	3.36E+00	4.00E+00
	Mass Rate - lb/hr	4.71E-04	5.65E-04	4.03E-04	4.80E-04
Ethane	Conc. - ppmdv	< 5.00E-01	< 5.00E-01	< 5.00E-01	< 5.00E-01
	Mass Rate - lb/hr	< 1.12E-04	< 1.12E-04	< 1.12E-04	< 1.12E-04
C_2 as Ethane	Conc. - ppmdv	1.19E+01	1.38E+01	1.06E+01	1.21E+01
	Mass Rate - lb/hr	2.67E-03	3.10E-03	2.38E-03	2.72E-03
Propane	Conc. - ppmdv	< 5.00E-01	< 5.00E-01	< 5.00E-01	< 5.00E-01
	Mass Rate - lb/hr	< 1.65E-04	< 1.65E-04	< 1.65E-04	< 1.65E-04
C_3 as Propane	Conc. - ppmdv	3.17E+00	3.85E+00	3.15E+00	3.39E+00
	Mass Rate - lb/hr	1.04E-03	1.27E-03	1.04E-03	1.12E-03
Butane	Conc. - ppmdv	< 5.00E-01	< 5.00E-01	< 5.00E-01	< 5.00E-01
	Mass Rate - lb/hr	< 2.17E-04	< 2.17E-04	< 2.17E-04	< 2.17E-04
Pentane	Conc. - ppmdv	< 5.01E-01	< 5.01E-01	< 5.01E-01	< 5.01E-01
	Mass Rate - lb/hr	< 2.70E-04	< 2.70E-04	< 2.70E-04	< 2.70E-04
C_5 as Pentane	Conc. - ppmdv	1.48E-02	8.42E-03	1.38E-02	1.23E-02
	Mass Rate - lb/hr	7.98E-06	4.54E-06	7.45E-06	6.66E-06
Hexane	Conc. - ppmdv	< 5.01E-01	< 5.01E-01	< 5.01E-01	< 5.01E-01
	Mass Rate - lb/hr	< 3.23E-04	< 3.23E-04	< 3.23E-04	< 3.23E-04
C_6 as Hexane	Conc. - ppmdv	< 1.94E-04	< 1.62E-04	< 1.72E-04	< 1.76E-04
	Mass Rate - lb/hr	< 1.25E-07	< 1.04E-07	< 1.11E-07	< 1.13E-07
Heptane	Conc. - ppmdv	< 5.01E-01	< 5.01E-01	< 5.01E-01	< 5.01E-01
	Mass Rate - lb/hr	< 3.75E-04	< 3.75E-04	< 3.75E-04	< 3.75E-04
C_7 as Heptane	Conc. - ppmdv	~ 1.64E-03	~ 1.39E-03	~ 1.43E-03	~ 1.49E-03
	Mass Rate - lb/hr	~ 1.22E-06	~ 1.04E-06	~ 1.07E-06	~ 1.11E-06

Notes

(1) Gas flowrate data taken from run 2 of the total chromatographable organic sampling (KSI-MTCO-R2).

(2) Gas flowrate data taken from run 3 of the total chromatographable organic sampling (KSI-MTCO-R3).

< Indicates below minimum detection limit (or average calculated using one or more nondetected runs).

~ indicates estimate (above detection limit, but below limit of quantification).

TABLE 3-22

SUMMARY OF TOTAL VOC EMISSIONS

JCI/UPCYCLE
KILN SCRUBBER OUTLET

RUN I.D.		KSO-M0040-R1	KSO-M0040-R2	KSO-M0040-R3	AVERAGE
DATE		03/15-16/01	03/16/01	03/16/01	
TIME STARTED		23:22	00:34	01:45	
TIME ENDED		00:22	01:34	02:45	
SAMPLING PARAMETERS					
Corrected Volume - dscf		0.635	0.627	0.655	0.639
Corrected Flow Rate - dscfm		431 (1)	431 (1)	436 (2)	433
TOTAL VOC EMISSIONS					
Methane	Conc. - ppmdv	3.61E+00	3.86E+00	3.54E+00	3.67E+00
	Mass Rate - lb/hr	3.89E-03	4.16E-03	3.86E-03	3.97E-03
Ethane	Conc. - ppmdv	< 5.00E-01	< 5.00E-01	< 5.00E-01	< 5.00E-01
	Mass Rate - lb/hr	< 1.01E-03	< 1.01E-03	< 1.02E-03	< 1.01E-03
C_2 as Ethane	Conc. - ppmdv	< 5.00E-01	< 5.00E-01	< 5.00E-01	< 5.00E-01
	Mass Rate - lb/hr	< 1.01E-03	< 1.01E-03	< 1.02E-03	< 1.01E-03
Propane	Conc. - ppmdv	< 5.00E-01	< 5.00E-01	< 5.00E-01	< 5.00E-01
	Mass Rate - lb/hr	< 1.48E-03	< 1.48E-03	< 1.50E-03	< 1.49E-03
C_3 as Propane	Conc. - ppmdv	< 5.00E-01	< 5.00E-01	< 5.00E-01	< 5.00E-01
	Mass Rate - lb/hr	< 1.48E-03	< 1.48E-03	< 1.50E-03	< 1.49E-03
Butane	Conc. - ppmdv	< 5.00E-01	< 5.00E-01	< 5.00E-01	< 5.00E-01
	Mass Rate - lb/hr	< 1.95E-03	< 1.95E-03	< 1.97E-03	< 1.96E-03
Pentane	Conc. - ppmdv	< 5.01E-01	< 5.01E-01	< 5.01E-01	< 5.01E-01
	Mass Rate - lb/hr	< 2.43E-03	< 2.43E-03	< 2.45E-03	< 2.43E-03
C_5 as Pentane	Conc. - ppmdv	1.24E-02	8.13E-03	7.30E-03	9.28E-03
	Mass Rate - lb/hr	6.01E-05	3.94E-05	3.57E-05	4.51E-05
Hexane	Conc. - ppmdv	< 5.01E-01	< 5.01E-01	< 5.01E-01	< 5.01E-01
	Mass Rate - lb/hr	< 2.90E-03	< 2.90E-03	< 2.93E-03	< 2.91E-03
C_6 as Hexane	Conc. - ppmdv	< 1.55E-04	< 1.57E-04	< 1.50E-04	< 1.54E-04
	Mass Rate - lb/hr	< 8.98E-07	< 9.10E-07	< 8.80E-07	< 8.96E-07
Heptane	Conc. - ppmdv	< 5.01E-01	< 5.01E-01	< 5.01E-01	< 5.01E-01
	Mass Rate - lb/hr	< 3.37E-03	< 3.37E-03	< 3.41E-03	< 3.38E-03
C_7 as Hexane	Conc. - ppmdv	~ 1.40E-03	~ 1.31E-03	~ 1.12E-03	~ 1.28E-03
	Mass Rate - lb/hr	~ 9.43E-06	~ 8.79E-06	~ 7.62E-06	~ 8.61E-06

Notes
(1) Gas flowrate data taken from run 2 of the total chromatographable organic sampling (KSO-MTCO-R2).
(2) Gas flowrate data taken from run 3 of the total chromatographable organic sampling (KSO-MTCO-R3).
< Indicates below minimum detection limit (or average calculated using one or more nondetected runs).
~ indicates estimate (above detection limit, but below limit of quantification).

TABLE 3-23

SUMMARY OF HCL, HBR, HF, AMMONIA AND CHLORINE LOADINGS
JCI/UPCYCLE

KILN SCRUBBER INLET

RUN I.D.	KSI-M0050-R1	KSI-M0050-R2	KSI-M0050-R3	AVERAGE
DATE	03/14/01	03/14/01	03/14/01	
TIME STARTED	07:50	10:34	13:13	
TIME ENDED	09:50	12:34	15:13	
SAMPLING PARAMETERS				
Metered Volume - dcf	79.757	80.927	82.304	80.996
Corrected Volume - dscf	74.964	75.893	77.161	76.006
Total Test Time - min	120	120	120	120
% Isokinetics	100.7	102.1	102.9	101.9
GAS PARAMETERS				
Gas Temperature - ° F	702	676	677	685
Oxygen - %	8.0	9.2 *	10.4	9.2
Carbon Dioxide - %	14.9	14.9 *	14.9	14.9
Moisture - %	15.5	16.7	15.8	16.0
GAS FLOWRATE				
Velocity - ft/sec	6.48	6.42	6.40	6.44
Actual Volume - acfm	132	131	131	131
Standard Volume - dscfm	51	51	51	51
HCl LOADINGS				
Concentration - ppmdv	660.39	654.96	550.91	622.09
Mass Rate - lb/hr	1.90E-01	1.88E-01	1.59E-01	1.79E-01
HBr LOADINGS				
Concentration - ppmdv	2.27	2.24	2.20	2.24
Mass Rate - lb/hr	1.45E-03	1.43E-03	1.42E-03	1.43E-03
HF LOADINGS				
Concentration - ppmdv	64.46	69.85	62.89	65.73
Mass Rate - lb/hr	1.02E-02	1.10E-02	9.98E-03	1.04E-02
AMMONIA LOADINGS				
Concentration - ppmdv	81.39	58.12	52.28	63.93
Mass Rate - lb/hr	1.09E-02	7.79E-03	7.06E-03	8.59E-03
CHLORINE LOADINGS				
Concentration - ppmdv	1.03	2.60	2.72	2.12
Mass Rate - lb/hr	5.75E-04	1.45E-03	1.53E-03	1.18E-03

Notes

* O2 and CO2 data were lost due to FAC equipment malfunction. Values shown are averages of runs 1 (KSI-M0050-R1) and 3 (KSI-M0050-R3).

TABLE 3-24

SUMMARY OF HCL, HBR, HF, AMMONIA AND CHLORINE EMISSIONS
JCI/UPCYCLE

KILN SCRUBBER OUTLET

RUN I.D.	KSO-M0050-R1	KSO-M0050-R2	KSO-M0050-R3	AVERAGE
DATE	03/14/01	03/14/01	03/14/01	
TIME STARTED	07:50	10:34	13:13	
TIME ENDED	09:50	12:34	15:13	
SAMPLING PARAMETERS				
Metered Volume - dcf	117.204	123.843	119.968	120.338
Corrected Volume - dscf	114.358	119.858	115.830	116.682
Total Test Time - min	120	120	120	120
% Isokinetics	97.6	101.8	106.0	101.8
GAS PARAMETERS				
Gas Temperature - ° F	111	113	117	114
Oxygen - %	16.9	17.1 *	17.2	17.1
Carbon Dioxide - %	3.0	3.1 *	3.2	3.1
Moisture - %	8.0	7.3	8.9	8.1
GAS FLOWRATE				
Velocity - ft/sec	25.10	25.09	23.83	24.67
Actual Volume - acfm	513	512	487	504
Standard Volume - dscfm	434	436	404	425
HCl EMISSIONS				
Concentration - ppmdv	< 2.72E-02	< 2.60E-02	< 2.69E-02	< 2.67E-02
Mass Rate - lb/hr	< 6.71E-05	< 6.43E-05	< 6.17E-05	< 6.44E-05
HBr EMISSIONS				
Concentration - ppmdv	< 2.32E-02	< 2.22E-02	< 2.29E-02	< 2.28E-02
Mass Rate - lb/hr	< 1.27E-04	< 1.22E-04	< 1.17E-04	< 1.22E-04
HF EMISSIONS				
Concentration - ppmdv	< 5.08E-02	< 4.85E-02	< 5.02E-02	< 4.98E-02
Mass Rate - lb/hr	< 6.87E-05	< 6.59E-05	< 6.32E-05	< 6.59E-05
AMMONIA EMISSIONS				
Concentration - ppmdv	< 1.03E-02	< 9.82E-03	< 1.02E-02	< 1.01E-02
Mass Rate - lb/hr	< 1.18E-05	< 1.14E-05	< 1.09E-05	< 1.14E-05
CHLORINE EMISSIONS				
Concentration - ppmdv	6.03E-03	1.02E-02	< 1.34E-02	< 9.91E-03
Mass Rate - lb/hr	2.89E-05	4.93E-05	< 6.00E-05	< 4.61E-05

Notes

< Indicates below minimum detection limit (or average calculated using one or more nondetected runs).

* O_2 and CO_2 data were lost due to FAC equipment malfunction. Values shown are averages of runs 1 (KSO-M0050-R1) and 3 (KSO-M0050-R3).

TABLE 3-25

SUMMARY OF HEXAVALENT CHROMIUM LOADINGS
JCI/UPCYCLE

KILN SCRUBBER INLET

RUN I.D.	KSI-M0061-R1	KSI-M0061-R2	KSI-M0061-R3	AVERAGE
DATE	03/14/01	03/14/01	03/15/01	
TIME STARTED	17:25	21:08	00:06	
TIME ENDED	19:25	23:08	02:06	
SAMPLING PARAMETERS				
Metered Volume - dcf	79.898	76.830	79.292	78.673
Corrected Volume - dscf	75.643	74.179	76.629	75.484
Total Test Time - min	120	120	120	120
% Isokinetics	100.6	99.5	103.2	101.1
GAS PARAMETERS				
Gas Temperature - ° F	679	682	682	681
Oxygen - %	8.6	8.5	8.9	8.7
Carbon Dioxide - %	16.3	16.0	15.4	15.9
Moisture - %	15.6	16.3	16.9	16.3
GAS FLOWRATE				
Velocity - ft/sec	6.37	6.39	6.41	6.39
Actual Volume - acfm	130	131	131	131
Standard Volume - dscfm	51	51	50	51
HEXAVALENT CHROMIUM LOADINGS				
Conc. - ug/dscm	9.34	12.85	21.66	14.62
Mass Rate - lb/hr	1.79E-06	2.44E-06	4.10E-06	2.77E-06

Notes
< Indicates below minimum detection limit (or average calculated using one or more nondetected runs).

TABLE 3-26

SUMMARY OF HEXAVALENT CHROMIUM EMISSIONS
JCI/UPCYCLE

KILN SCRUBBER OUTLET

RUN I.D.	KSO-M0061-R1	KSO-M0061-R2	KSO-M0061-R3	AVERAGE
DATE	03/14/01	03/14/01	03/15/01	
TIME STARTED	17:25	21:08	00:06	
TIME ENDED	19:25	23:08	02:06	
SAMPLING PARAMETERS				
Metered Volume - dcf	113.630	103.869	99.943	105.814
Corrected Volume - dscf	110.183	102.536	99.632	104.117
Total Test Time - min	120	120	120	120
% Isokinetics	106.8	103.6	104.2	104.9
GAS PARAMETERS				
Gas Temperature - ° F	115	115	111	114
Oxygen - %	16.0	16.5	16.6	16.3
Carbon Dioxide - %	4.1	3.7	3.8	3.9
Moisture - %	8.1	8.6	8.4	8.3
GAS FLOWRATE				
Velocity - ft/sec	22.08	21.31	20.39	21.26
Actual Volume - acfm	451	435	416	434
Standard Volume - dscfm	382	366	354	367
HEXAVALENT CHROMIUM EMISSIONS				
Conc. - ug/dscm	< 0.25	< 0.30	< 0.32	< 0.29
Mass Rate - lb/hr	< 3.57E-07	< 4.06E-07	< 4.18E-07	< 3.94E-07

Notes
< Indicates below minimum detection limit (or average calculated using one or more nondetected runs).

Table 3-27

ANALYSIS OF FUEL OIL SAMPLES
JCI/UPCYCLE
AGGREGATE KILN TESTING

FUEL OIL COMPOSITE SAMPLES						
Sampling date		**03/16/01**		**03/16/01 Duplicate**		**Average**
Sampling times		NA(1)		NA(1)		
Sampling frequency		Once During Test Program				
Halogens - %, w/w						
total chlorine		0.07		0.06		0.06
total bromine	<	0.01	<	0.01	<	0.01
total flourine	<	0.01	<	0.01	<	0.01

Notes:

(1) One representative composite sample was taken from the oil supply tank during the test program.

< Indicates below analytical detection limit or a non-detect included in an average.

Table 3-28

ANALYSIS OF SHALE SAMPLES
JCI/UPCYCLE
AGGREGATE KILN TESTING

SHALE SAMPLES						
Sampling date		03/16/01		03/16/01 Duplicate		Average
Sampling times		NA(1)		NA(1)		
Sampling frequency		Once During Test Program				
Metals - mg/kg (dry)						
Aluminum		7130		7120		7125
Antimony	<	1	<	1	<	1
Arsenic		6.94		7.49		7.22
Barium		134		130		132
Beryllium	<	0.5	<	0.5	<	0.5
Cadmium	<	0.5	<	0.5	<	0.5
Calcium		36700		34300		35500
Chromium		7.24		7.46		7.35
Cobalt		15.4		15.5		15.5
Copper		39.4		42.0		40.7
Iron		24100		24600		24350
Lead		22.3		22.3		22.3
Magnesium		2490		2540		2515
Manganese		398		409		404
Nickel		30.9		31.1		31.0
Potassium		6140		5720		5930
Selenium	<	1	<	1	<	1
Silver	<	1	<	1	<	1
Sodium		1110		1080		1095
Thallium	<	1	<	1	<	1
Vanadium		8.8		8.76		8.78
Zinc		54.6		55.6		55.1
Mercury		0.172		0.074		0.123
Halogens - %, w/w						
total chlorine		0.04		0.05		0.05
total bromine	<	0.01	<	0.01	<	0.01
total flourine		0.03		0.03		0.03
Total Organic Carbon - %, w/w		0.4		0.4		0.4

Notes:
(1) One representative composite sample was taken during the testing program.
< Indicates below analytical detection limit or a non-detect included in an average.

Table 3-29A

ANALYSIS OF FEED PELLET SAMPLES
JCI/UPCYCLE
AGGREGATE KILN TESTING

FEED PELLETS					
Sampling date	03/14/01	03/15/01	03/15/01 Duplicate	03/14-15/01 Composite	Average
Sampling times	(1)	(1)	(1)	(1)	
Sampling frequency	60 minutes	60 minutes	60 minutes	60 minutes	
Metals - mg/kg (dry)					
Aluminum	11800	12300	13000	12200	12325
Antimony	< 1	< 1	< 1	< 1	< 1
Arsenic	10.4	10.5	10.4	11.9	10.8
Barium	127	124	131	129	128
Beryllium	< 0.5	< 0.5	< 0.5	< 0.5	< 0.5
Cadmium	1.45	1.41	1.45	1.46	1.44
Calcium	17000	18100	17900	18500	17875
Chromium	116	117	120	119	118
Cobalt	13.1	11.9	12.5	12.8	12.6
Copper	126	115	118	138	124
Iron	29200	27800	28100	30000	28775
Lead	115	111	113	114	113
Magnesium	6440	6490	6600	6610	6535
Manganese	567	553	559	570	562
Nickel	46.7	44.3	45.6	47.2	46.0
Potassium	3990	4070	4450	4220	4183
Selenium	< 1	< 1	< 1	< 1	< 1
Silver	3.28	3.33	3.5	3.4	3.4
Sodium	4370	3880	3980	4640	4218
Thallium	< 1	< 1	< 1	< 1	< 1
Vanadium	28.3	27.1	28.9	29.3	28.4
Zinc	213	204	210	214	210
Mercury	2.18	2.397	2.417	2.358	2.338
Halogens - %, w/w					
total chlorine	0.31	0.32	0.28	0.35	0.32
total bromine	< 0.01	< 0.01	< 0.01	< 0.01	< 0.01
total flourine	< 0.01	< 0.01	< 0.01	< 0.01	< 0.01
PCDD/PCDF - pg/g					
TOTAL TCDF	400	350	400	400	388
TOTAL PCDF	430	420	410	420	420
TOTAL HxCDF	530	480	520	510	510
TOTAL HpCDF	980	1000	990	920	973
TOTAL TCDD	180	170	200	190	185
TOTAL PCDD	19	35	39	20	28
TOTAL HxCDD	190	190	190	190	190
TOTAL HpCDD	790	770	780	780	780
2378-TCDF	88	87	87	88	88
2378-TCDD	120	120	120	120	120
12378-PCDF	13	14	13	13	13
23478-PCDF	28	33	26	25	28
12378-PCDD	2.9	4.7	4.5	4.0	4.0
123478-HxCDF	170	180	170	160	170
123678-HxCDF	47	< 65	41	41	< 49
234678-HxCDF	17	17	16	16	17
123789-HxCDF	1.1	1.1	0.76	1.1	1.0
123478-HxCDD	4.5	4.3	4.5	4.4	4.4
123678-HxCDD	20	20	20	19	20
123789-HxCDD	15	15	14	14	15
1234678-HpCDF	700	710	700	680	698
1234789-HpCDF	22	23	22	21	22
1234678-HpCDD	340	330	330	330	333
OCDF	890	900	890	860	885
OCDD	3100	3100	3100	3100	3100
2378-TCDD Equivalency	**186**	**192**	**185**	**183**	**187**

Notes:
(1) Sampling was conducted approximately every hour during air emissions testing and composited for each test day as follows:
03/14/01: 0800, 03/14/01 - 0700, 03/15/01; 03/15/01: 0800, 03/15/01 - 0600, 03/16/01.
< Indicates below analytical detection limit or a non-detect included in an average.

Table 3-29B

ANALYSIS OF FEED PELLET SAMPLES
JCI/UPCYCLE
AGGREGATE KILN TESTING

FEED PELLETS					
Sampling date	03/14/01	03/15/01	03/15/01 Duplicate	03/14-15/01 Composite	Average
Sampling times	(1)	(1)	(1)	(1)	
Sampling frequency	60 minutes	60 minutes	60 minutes	60 minutes	
Herbicides - ug/kg					
2,4-D	< 100	< 100	< 100	< 100	< 100
2,4,5-TP (Silvex)	< 100	< 100	< 100	< 100	< 100
Pesticides - ug/kg					
Aldrin	< 20	< 20	< 20	< 20	< 20
alpha-BHC	< 20	< 20	< 20	< 20	< 20
beta-BHC	< 20	< 20	< 20	< 20	< 20
delta-BHC	< 20	< 20	< 20	< 20	< 20
gamma-BHC (Lindane)	< 20	< 20	< 20	< 20	< 20
Chlordane	< 100	< 100	< 100	< 100	< 100
4,4'-DDD	< 20	< 20	< 20	< 20	< 20
4,4'-DDE	< 20	< 20	< 20	< 20	< 20
4,4'-DDT	< 20	< 20	< 20	< 20	< 20
Dieldrin	< 20	< 20	< 20	< 20	< 20
Endosulfan I	< 20	< 20	< 20	< 20	< 20
Endosulfan II	< 20	< 20	< 20	< 20	< 20
Endosulfan sulfate	< 20	< 20	< 20	< 20	< 20
Endrin	< 20	< 20	< 20	< 20	< 20
Endrin aldehyde	< 20	< 20	< 20	< 20	< 20
Heptachlor	< 20	< 20	< 20	< 20	< 20
Heptachlor epoxide	< 20	< 20	< 20	< 20	< 20
Methoxychlor	< 1000	< 1000	< 1000	< 1000	< 1000
Toxaphene	< 1000	< 1000	< 1000	< 1000	< 1000
PCB - mg/kg					
PCB 1016	< 0.04	< 0.04	< 0.04	< 0.04	< 0.04
PCB 1221	< 0.04	< 0.04	< 0.04	< 0.04	< 0.04
PCB 1232	< 0.04	< 0.04	< 0.04	< 0.04	< 0.04
PCB 1242	< 0.04	< 0.04	< 0.04	< 0.04	< 0.04
PCB 1248	0.12	0.14	0.17	0.13	0.14
PCB 1254	0.11	0.1	0.14	0.11	0.12
PCB 1260	< 0.04	< 0.04	< 0.04	< 0.04	< 0.04
Total PCB	0.23	0.24	0.31	0.24	0.26

Notes:
(1) Sampling was conducted approximately every hour during air emissions testing and composited for each test day as follows
03/14/01: 0800, 03/14/01 - 0700, 03/15/01; 03/15/01: 0800, 03/15/01 - 0600, 03/16/01.
< Indicates below analytical detection limit or a non-detect included in an average.

Table 3-29C

ANALYSIS OF FEED PELLET SAMPLES
JCI/UPCYCLE
AGGREGATE KILN TESTING

FEED PELLETS					
Sampling date	03/14/01	03/15/01	03/15/01 Duplicate	03/14-15/01 Composite	Average
Sampling times	(1)	(1)	(1)	(1)	
Sampling frequency	60 minutes	60 minutes	60 minutes	60 minutes	
Volatile Organic Compounds - ug/kg					
Benzene	< 5	< 5	< 5	< 5	< 5
Bromobenzene	< 5	< 5	< 5	< 5	< 5
Bromochloromethane	< 50	< 50	< 50	< 50	< 50
Bromodichloromethane	< 50	< 50	< 50	< 50	< 50
Bromoform	< 5	< 5	< 5	< 5	< 5
Bromomethane	< 50	< 50	< 50	< 50	< 50
n-Butylbenzene	< 5	< 5	< 5	< 5	< 5
sec-Butylbenzene	< 5	< 5	< 5	< 5	< 5
tert-Butylbenzene	< 5	< 5	< 5	< 5	< 5
Carbon tetrachloride	< 5	< 5	< 5	< 5	< 5
Chlorobenzene	< 5	< 5	< 5	< 5	< 5
Chloroethane	< 5	< 5	< 5	< 5	< 5
Chloroform	< 50	< 50	< 50	< 50	< 50
1-Chlorohexane	< 5	< 5	< 5	< 5	< 5
Chloromethane	< 50	< 50	< 50	< 50	< 50
2-Chlorotoluene	< 5	< 5	< 5	< 5	< 5
4-Chlorotoluene	< 5	< 5	< 5	< 5	< 5
Dibromochloromethane	< 5	< 5	< 5	< 5	< 5
1,2-Dibromo-3-chloropropane	< 5	< 5	< 5	< 5	< 5
1,2-Dibromoethane	< 5	< 5	< 5	< 5	< 5
Dibromomethane	< 5	< 5	< 5	< 5	< 5
1,2-Dichlorobenzene	< 5	< 5	< 5	< 5	< 5
1,3-Dichlorobenzene	< 5	< 5	< 5	< 5	< 5
1,4-Dichlorobenzene	< 5	< 5	< 5	< 5	< 5
Dichlorodifluoromethane	< 5	< 5	< 5	< 5	< 5
1,1-Dichloroethane	< 5	< 5	< 5	< 5	< 5
1,2-Dichloroethane	< 5	< 5	< 5	< 5	< 5
1,1-Dichloroethylene	< 5	< 5	< 5	< 5	< 5
1,2-Dichloroethylene (Total)	< 5	< 5	< 5	< 5	< 5
1,2-Dichloropropane	< 5	< 5	< 5	< 5	< 5
1,3-Dichloropropane	< 5	< 5	< 5	< 5	< 5
2,2-Dichloropropane	< 5	< 5	< 5	< 5	< 5
1,1-Dichloropropylene	< 5	< 5	< 5	< 5	< 5
cis-1,3-Dichloropropylene	< 5	< 5	< 5	< 5	< 5
trans-1,3-Dichloropropylene	< 5	< 5	< 5	< 5	< 5
Ethylbenzene	< 5	< 5	< 5	< 5	< 5
Hexachlorobutadiene	< 5	< 5	< 5	< 5	< 5
Isopropylbenzene	< 5	< 5	< 5	< 5	< 5
p-Isopropyltoluene	< 5	< 5	< 5	< 5	< 5
Methylene chloride	< 5	< 5	< 5	< 5	< 5
Naphthalene	< 5	< 5	< 5	< 5	< 5
n-Propylbenzene	< 5	< 5	< 5	< 5	< 5
Styrene	< 5	< 5	< 5	< 5	< 5
1,1,1,2-Tetrachloroethane	< 5	< 5	< 5	< 5	< 5
1,1,2,2-Tetrachloroethane	< 5	< 5	< 5	< 5	< 5
Tetrachloroethylene	< 5	< 5	< 5	< 5	< 5
Toluene	< 5	< 5	< 5	< 5	< 5
1,2,3-Trichlorobenzene	< 5	< 5	< 5	< 5	< 5
1,2,4-Trichlorobenzene	< 5	< 5	< 5	< 5	< 5
1,1,1-Trichloroethane	< 5	< 5	< 5	< 5	< 5
1,1,2-Trichloroethane	< 5	< 5	< 5	< 5	< 5
Trichloroethylene	< 5	< 5	< 5	< 5	< 5
Trichlorofluoromethane	< 5	< 5	< 5	< 5	< 5
1,2,3-Trichloropropane	< 5	< 5	< 5	< 5	< 5
1,2,3-Trimethylbenzene	< 5	< 5	< 5	< 5	< 5
1,2,4-Trimethylbenzene	< 5	< 5	< 5	< 5	< 5
1,3,5-Trimethylbenzene	< 5	< 5	< 5	< 5	< 5
Vinyl chloride	< 50	< 50	< 50	< 50	< 50
o-Xylene	< 5	< 5	< 5	< 5	< 5
p- & m-Xylenes	< 5	< 5	< 5	< 5	< 5

Notes:
(1) Sampling was conducted approximately every hour during air emissions testing and composited for each test day as follows:
03/14/01: 0800, 03/14/01 - 0700, 03/15/01; 03/15/01: 0800, 03/15/01 - 0600, 03/16/01.
< Indicates below analytical detection limit or a non-detect included in an average.

Table 3-29D

ANALYSIS OF FEED PELLET SAMPLES
JCI/UPCYCLE
AGGREGATE KILN TESTING

FEED PELLETS										
Sampling date		03/14/01		03/15/01		03/15/01 Duplicate		03/14-15/01 Composite		Average
Sampling times		(1)		(1)		(1)		(1)		
Sampling frequency		60 minutes		60 minutes		60 minutes		60 minutes		
Semi-Volatile Organic Compounds - ug/kg										
Acenaphthene	<	830	<	830	<	830	<	830	<	830
Acenaphthylene	<	830	<	830	<	830	<	830	<	830
Anthracene	J	170	J	190	J	190	J	200	J	188
Benzo(a)anthracene	J	500	J	500	J	500	J	620	J	530
Benzo(b)fluoranthene	J	650	J	710	J	700		890	J	738
Benzo(k)fluoranthene	J	180	J	830	J	180	J	220	J	353
Benzo(g,h,i)perylene	<	830	<	830	<	830	<	830	<	830
Benzo(a)pyrene		470		490		510		630		525
Benzyl alcohol	<	830	<	830	<	830	<	830	<	830
Bis(2-chloroethoxy)methane	<	830	<	830	<	830	<	830	<	830
Bis(2-chloroethyl)ether	<	830	<	830	<	830	<	830	<	830
Bis(2-chloroisopropyl)ether	<	830	<	830	<	830	<	830	<	830
Bis(2-ethylhexyl)phthalate		6200		6100		6500		7800		6650
4-Bromophenyl phenyl ether	<	830	<	830	<	830	<	830	<	830
Butyl benzyl phthalate	<	830	<	830	<	830	<	830	<	830
4-Chloroaniline	<	830	<	830	<	830	<	830	<	830
2-Chloronaphthalene	<	830	<	830	<	830	<	830	<	830
4-Chloro-3-methyl phenol	<	830	<	830	<	830	<	830	<	830
2-Chlorophenol	<	830	<	830	<	830	<	830	<	830
4-Chlorophenyl phenyl ether	<	830	<	830	<	830	<	830	<	830
Chrysene	J	570	J	600	J	630	J	740	J	635
Dibenz(a,h)anthracene	<	830	<	830	<	830	<	830	<	830
Dibenzofuran	<	830	<	830	<	830	<	830	<	830
Di-n-butylphthalate	<	830	<	830	<	830	<	830	<	830
1,3-Dichlorobenzene	<	830	<	830	<	830	<	830	<	830
1,4-Dichlorobenzene	<	830	<	830	<	830	<	830	<	830
1,2-Dichlorobenzene	<	830	<	830	<	830	<	830	<	830
3,3'-Dichlorobenzidine	<	830	<	830	<	830	<	830	<	830
2,4-Dichlorophenol	<	830	<	830	<	830	<	830	<	830
Diethylphthalate	<	830	<	830	<	830	<	830	<	830
2,4-Dimethylphenol	<	830	<	830	<	830	<	830	<	830
Dimethylphthalate	<	830	<	830	<	830	<	830	<	830
4,6-Dinitro-2-methylphenol	<	4300	<	4300	<	4300	<	4300	<	4300
2,4-Dinitrophenol	<	4300	<	4300	<	4300	<	4300	<	4300
2,4-Dinitrotoluene	<	830	<	830	<	830	<	830	<	830
2,6-Dinitrotoluene	<	830	<	830	<	830	<	830	<	830
Di-n-octylphthalate	<	830	<	830	<	830	<	830	<	830
Fluoranthene		900		970		930		830		908
Fluorene	<	830	<	830	<	830	<	830	<	830
Hexachlorobenzene	<	830	<	830	<	830	<	830	<	830
Hexachlorobutadiene	<	830	<	830	<	830	<	830	<	830
Hexachlorocyclopentadiene	<	830	<	830	<	830	<	830	<	830
Hexachloroethane	<	830	<	830	<	830	<	830	<	830
Indeno(1,2,3-cd)pyrene	<	830	<	830	<	830	<	830	<	830
Isophorone	<	830	<	830	<	830	<	830	<	830
2-Methylnaphthalene	<	830	<	830	<	830	<	830	<	830
2-Methylphenol	<	830	<	830	<	830	<	830	<	830
4-Methylphenol	<	830	<	830	<	830	<	830	<	830
Naphthalene	<	830	<	830	<	830	<	830	<	830
2-Nitroaniline	<	4300	<	4300	<	4300	<	4300	<	4300
3-Nitroaniline	<	4300	<	4300	<	4300	<	4300	<	4300
4-Nitroaniline	<	4300	<	4300	<	4300	<	4300	<	4300
Nitrobenzene	<	830	<	830	<	830	<	830	<	830
2-Nitrophenol	<	830	<	830	<	830	<	830	<	830
4-Nitrophenol	<	4300	<	4300	<	4300	<	4300	<	4300
N-Nitrosodiphenylamine	<	830	<	830	<	830	<	830	<	830
N-Nitrosodi-n-propylamine	<	830	<	830	<	830	<	830	<	830
Pentachlorophenol	<	4300	<	4300	<	4300	<	4300	<	4300
Phenanthrene	J	220	J	240	J	220	J	260	J	235
Phenol	<	830	<	830	<	830	<	830	<	830
Pyrene		840		920		920		830		878
1,2,4-Trichlorobenzene	<	830	<	830	<	830	<	830	<	830
2,4,5-Trichlorophenol	<	830	<	830	<	830	<	830	<	830
2,4,6-Trichlorophenol	<	830	<	830	<	830	<	830	<	830

Notes:
(1) Sampling was conducted approximately every hour during air emissions testing and composited for each test day as follows:
03/14/01: 0800, 03/14/01 - 0700, 03/15/01; 03/15/01: 0800, 03/15/01 - 0600, 03/16/01.
< Indicates below analytical detection limit or a non-detect included in an average.
J Detected but below the quantitation limit; quantity is estimated

Table 3-29E

ANALYSIS OF FEED PELLET SAMPLES
JCI/UPCYCLE
AGGREGATE KILN TESTING

FEED PELLETS										
Sampling date		03/14/01		03/15/01		03/15/01 Duplicate		03/14-15/01 Composite		Average
Sampling times		(1)		(1)		(1)		(1)		
Sampling frequency		60 minutes		60 minutes		60 minutes		60 minutes		
TCLP Volatiles - ug/L										
Benzene	<	1	<	1	<	1	<	1	<	1
Bromobenzene	<	1	<	1	<	1	<	1	<	1
Bromochloromethane	<	10	<	10	<	10	<	10	<	10
Bromodichloromethane	<	10	<	10	<	10	<	10	<	10
Bromoform	<	1	<	1	<	1	<	1	<	1
Bromomethane	<	10	<	10	<	10	<	10	<	10
n-Butylbenzene	<	1	<	1	<	1	<	1	<	1
sec-Butylbenzene	<	1	<	1	<	1	<	1	<	1
tert-Butylbenzene	<	1	<	1	<	1	<	1	<	1
Carbon tetrachloride	<	1	<	1	<	1	<	1	<	1
Chlorobenzene	<	1	<	1	<	1	<	1	<	1
Chloroethane	<	1	<	1	<	1	<	1	<	1
Chloroform	<	10	<	10	<	10	<	10	<	10
1-Chlorohexane	<	1	<	1	<	1	<	1	<	1
Chloromethane	<	10	<	10	<	10	<	10	<	10
2-Chlorotoluene	<	1	<	1	<	1	<	1	<	1
4-Chlorotoluene	<	1	<	1	<	1	<	1	<	1
Dibromochloromethane	<	1	<	1	<	1	<	1	<	1
1,2-Dibromo-3-chloropropane	<	1	<	1	<	1	<	1	<	1
1,2-Dibromoethane	<	1	<	1	<	1	<	1	<	1
Dibromomethane	<	1	<	1	<	1	<	1	<	1
1,2-Dichlorobenzene	<	1	<	1	<	1	<	1	<	1
1,3-Dichlorobenzene	<	1	<	1	<	1	<	1	<	1
1,4-Dichlorobenzene	<	1	<	1	<	1	<	1	<	1
Dichlorodifluoromethane	<	1	<	1	<	1	<	1	<	1
1,1-Dichloroethane	<	1	<	1	<	1	<	1	<	1
1,2-Dichloroethane	<	1	<	1	<	1	<	1	<	1
1,1-Dichloroethylene	<	1	<	1	<	1	<	1	<	1
1,2-Dichloroethylene (Total)	<	1	<	1	<	1	<	1	<	1
1,2-Dichloropropane	<	1	<	1	<	1	<	1	<	1
1,3-Dichloropropane	<	1	<	1	<	1	<	1	<	1
2,2-Dichloropropane	<	1	<	1	<	1	<	1	<	1
1,1-Dichloropropylene	<	1	<	1	<	1	<	1	<	1
cis-1,3-Dichloropropylene	<	1	<	1	<	1	<	1	<	1
trans-1,3-Dichloropropylene	<	1	<	1	<	1	<	1	<	1
Ethylbenzene	<	1	<	1	<	1	<	1	<	1
Hexachlorobutadiene	<	1	<	1	<	1	<	1	<	1
Isopropylbenzene	<	1	<	1	<	1	<	1	<	1
p-Isopropyltoluene	<	1	<	1	<	1	<	1	<	1
Methylene chloride	<	1	<	1	<	1	<	1	<	1
Naphthalene	<	1	<	1	<	1	<	1	<	1
n-Propylbenzene	<	1	<	1	<	1	<	1	<	1
Styrene	<	1	<	1	<	1	<	1	<	1
1,1,1,2-Tetrachloroethane	<	1	<	1	<	1	<	1	<	1
1,1,2,2-Tetrachloroethane	<	1	<	1	<	1	<	1	<	1
Tetrachloroethylene	<	1	<	1	<	1	<	1	<	1
Toluene	<	1	<	1	<	1	<	1	<	1
1,2,3-Trichlorobenzene	<	1	<	1	<	1	<	1	<	1
1,2,4-Trichlorobenzene	<	1	<	1	<	1	<	1	<	1
1,1,1-Trichloroethane	<	1	<	1	<	1	<	1	<	1
1,1,2-Trichloroethane	<	1	<	1	<	1	<	1	<	1
Trichloroethylene	<	1	<	1	<	1	<	1	<	1
Trichlorofluoromethane	<	1	<	1	<	1	<	1	<	1
1,2,3-Trichloropropane	<	1	<	1	<	1	<	1	<	1
1,2,3-Trimethylbenzene	<	1	<	1	<	1	<	1	<	1
1,2,4-Trimethylbenzene	<	1	<	1	<	1	<	1	<	1
1,3,5-Trimethylbenzene	<	1	<	1	<	1	<	1	<	1
Vinyl chloride	<	10	<	10	<	10	<	10	<	10
o-Xylene	<	1	<	1	<	1	<	1	<	1
p- & m-Xylenes	<	1	<	1	<	1	<	1	<	1

Notes:
(1) Sampling was conducted approximately every hour during air emissions testing and composited for each test day as follows:
03/14/01: 0800, 03/14/01 - 0700, 03/15/01; 03/15/01: 0800, 03/15/01 - 0600, 03/16/01.
< Indicates below analytical detection limit or a non-detect included in an average.

Table 3-29F

ANALYSIS OF FEED PELLET SAMPLES
JCI/UPCYCLE
AGGREGATE KILN TESTING

FEED PELLETS					
Sampling date	03/14/01	03/15/01	03/15/01 Duplicate	03/14-15/01 Composite	Average
Sampling times	(1)	(1)	(1)	(1)	
Sampling frequency	60 minutes	60 minutes	60 minutes	60 minutes	
TCLP Semivolatiles - ug/L					
Acenaphthene	< 10	< 10	< 10	< 10	< 10
Acenaphthylene	< 10	< 10	< 10	< 10	< 10
Anthracene	< 10	< 10	< 10	< 10	< 10
Benzo(a)anthracene	< 10	< 10	< 10	< 10	< 10
Benzo(b)fluoranthene	< 10	< 10	< 10	< 10	< 10
Benzo(k)fluoranthene	< 10	< 10	< 10	< 10	< 10
Benzo(g,h,i)perylene	< 10	< 10	< 10	< 10	< 10
Benzo(a)pyrene	< 10	< 10	< 10	< 10	< 10
Benzyl alcohol	< 10	< 10	< 10	< 10	< 10
Bis(2-chloroethoxy)methane	< 10	< 10	< 10	< 10	< 10
Bis(2-chloroethyl)ether	< 10	< 10	< 10	< 10	< 10
Bis(2-chloroisopropyl)ether	< 10	< 10	< 10	< 10	< 10
Bis(2-ethylhexyl)phthalate	< 10	< 10	< 10	< 10	< 10
4-Bromophenyl phenyl ether	< 10	< 10	< 10	< 10	< 10
Butyl benzyl phthalate	< 10	< 10	< 10	< 10	< 10
4-Chloroaniline	< 10	< 10	< 10	< 10	< 10
2-Chloronaphthalene	< 10	< 10	< 10	< 10	< 10
4-Chloro-3-methyl phenol	< 10	< 10	< 10	< 10	< 10
2-Chlorophenol	< 10	< 10	< 10	< 10	< 10
4-Chlorophenyl phenyl ether	< 10	< 10	< 10	< 10	< 10
Chrysene	< 10	< 10	< 10	< 10	< 10
Dibenz(a,h)anthracene	< 10	< 10	< 10	< 10	< 10
Dibenzofuran	< 10	< 10	< 10	< 10	< 10
Di-n-butylphthalate	< 10	< 10	< 10	< 10	< 10
1,3-Dichlorobenzene	< 10	< 10	< 10	< 10	< 10
1,4-Dichlorobenzene	< 10	< 10	< 10	< 10	< 10
1,2-Dichlorobenzene	< 10	< 10	< 10	< 10	< 10
3,3'-Dichlorobenzidine	< 10	< 10	< 10	< 10	< 10
2,4-Dichlorophenol	< 10	< 10	< 10	< 10	< 10
Diethylphthalate	< 10	< 10	< 10	< 10	< 10
2,4-Dimethylphenol	< 10	< 10	< 10	< 10	< 10
Dimethylphthalate	< 10	< 10	< 10	< 10	< 10
4,6-Dinitro-2-methylphenol	< 50	< 50	< 50	< 50	< 50
2,4-Dinitrophenol	< 50	< 50	< 50	< 50	< 50
2,4-Dinitrotoluene	< 10	< 10	< 10	< 10	< 10
2,6-Dinitrotoluene	< 10	< 10	< 10	< 10	< 10
Di-n-octylphthalate	< 10	< 10	< 10	< 10	< 10
Fluoranthene	< 10	< 10	< 10	< 10	< 10
Fluorene	< 10	< 10	< 10	< 10	< 10
Hexachlorobenzene	< 10	< 10	< 10	< 10	< 10
Hexachlorobutadiene	< 10	< 10	< 10	< 10	< 10
Hexachlorocyclopentadiene	< 10	< 10	< 10	< 10	< 10
Hexachloroethane	< 10	< 10	< 10	< 10	< 10
Indeno(1,2,3-cd)pyrene	< 10	< 10	< 10	< 10	< 10
Isophorone	< 10	< 10	< 10	< 10	< 10
2-Methylnaphthalene	< 10	< 10	< 10	< 10	< 10
2-Methylphenol	< 10	< 10	< 10	< 10	< 10
4-Methylphenol	< 10	< 10	< 10	< 10	< 10
Naphthalene	< 10	< 10	< 10	< 10	< 10
2-Nitroaniline	< 50	< 50	< 50	< 50	< 50
3-Nitroaniline	< 50	< 50	< 50	< 50	< 50
4-Nitroaniline	< 50	< 50	< 50	< 50	< 50
Nitrobenzene	< 10	< 10	< 10	< 10	< 10
2-Nitrophenol	< 10	< 10	< 10	< 10	< 10
4-Nitrophenol	< 50	< 50	< 50	< 50	< 50
N-Nitrosodiphenylamine	< 10	< 10	< 10	< 10	< 10
N-Nitrosodi-n-propylamine	< 10	< 10	< 10	< 10	< 10
Pentachlorophenol	< 50	< 50	< 50	< 50	< 50
Phenanthrene	< 10	< 10	< 10	< 10	< 10
Phenol	< 10	< 10	< 10	< 10	< 10
Pyrene	< 10	< 10	< 10	< 10	< 10
1,2,4-Trichlorobenzene	< 10	< 10	< 10	< 10	< 10
2,4,5-Trichlorophenol	< 10	< 10	< 10	< 10	< 10
2,4,6-Trichlorophenol	< 10	< 10	< 10	< 10	< 10

Notes:
(1) Sampling was conducted approximately every hour during air emissions testing and composited for each test day as follows:
03/14/01: 0800, 03/14/01 - 0700, 03/15/01; 03/15/01: 0800, 03/15/01 - 0600, 03/16/01.
< Indicates below analytical detection limit or a non-detect included in an average.
(J) Detected but below the quantitation limit; quantity is estimated

Table 3-30A

ANALYSIS OF AGGREGATE PRODUCT SAMPLES
JCI/UPCYCLE
AGGREGATE KILN TESTING

AGGREGATE PRODUCT					
Sampling date	03/14/01	03/15/01	03/15/01 Duplicate	03/14-15/01 Composite	Average
Sampling times	(1)	(1)	(1)	(1)	
Sampling frequency	30 minutes	30 minutes	30 minutes	30 minutes	
Metals - mg/kg (dry)					
Aluminum	3220	6590	5200	7160	5543
Antimony	< 1	< 1	< 1	< 1	< 1
Arsenic	6.59	10.7	10	10.1	9.3
Barium	20.2	45.1	35.3	53.2	38.5
Beryllium	< 0.5	< 0.5	< 0.5	< 0.5	< 0.5
Cadmium	< 0.5	< 0.5	< 0.5	< 0.5	< 0.50
Calcium	3950	5780	4870	7420	5505
Chromium	4.82	13.8	11.2	15	11.2
Cobalt	1.2	11.2	11.3	7.86	7.9
Copper	13.9	111.8	110	67.3	75.8
Iron	2020	16000	15000	11900	11230
Lead	3.63	11	9.79	10.7	9
Magnesium	626	1650	1420	1730	1357
Manganese	29.3	87.2	74.2	91.8	70.6
Nickel	5.23	42.1	40.2	27.7	28.8
Potassium	253	860	654	739	627
Selenium	< 1	< 1	< 1	< 1	< 1
Silver	< 1	< 1	< 1	< 1	< 1.0
Sodium	950	1470	1290	1340	1263
Thallium	< 1	< 1	< 1	< 1	< 1
Vanadium	5.29	9.02	7.53	10.5	8.1
Zinc	11.6	27.7	24.9	21.3	21.4
Mercury	< 0.25	< 0.25	0.054	0.034	< 0.147
Halogens - %, w/w					
total chlorine	0.07	0.04	0.06	0.03	0.05
total bromine	< 0.01	< 0.01	< 0.01	< 0.01	< 0.01
total flourine	< 0.01	< 0.01	< 0.01	< 0.01	< 0.01
PCDD/PCDF - pg/g					
TOTAL TCDF	3.6	1.9	0.44	0.69	1.7
TOTAL PCDF	3.8	2.1	0.78	1.2	2.0
TOTAL HxCDF	4.9	3.2	1.5	0.79	2.6
TOTAL HpCDF	9.8	6.4	1.4	0.70	4.6
TOTAL TCDD	1.5	0.52	< 0.11	0.22	< 0.59
TOTAL PCDD	< 0.19	< 0.18	< 0.14	< 0.092	< 0.15
TOTAL HxCDD	2.2	1.2	0.5	0.60	1.1
TOTAL HpCDD	12	6.3	2.5	3.1	6.0
2378-TCDF	0.93	0.57	0.21	0.26	0.49
2378-TCDD	1.0	0.52	< 0.11	0.22	< 0.46
12378-PCDF	0.28	< 0.11	0.13	0.15	< 0.17
23478-PCDF	0.44	0.28	0.11	0.20	0.26
12378-PCDD	< 0.14	< 0.18	< 0.14	< 0.092	< 0.14
123478-HxCDF	1.8	1.0	0.28	0.33	0.85
123678-HxCDF	< 0.54	0.31	0.16	0.19	0.30
234678-HxCDF	0.29	0.20	0.16	0.25	0.23
123789-HxCDF	< 0.19	< 0.13	< 0.14	< 0.095	< 0.14
123478-HxCDD	0.11	< 0.11	0.088	0.14	< 0.11
123678-HxCDD	0.33	0.25	0.14	0.17	0.22
123789-HxCDD	0.27	0.20	0.12	0.18	0.19
1234678-HpCDF	6.7	4.4	0.74	< 0.91	3.2
1234789-HpCDF	0.36	0.28	0.14	0.18	0.24
1234678-HpCDD	5.9	3.3	1.5	1.9	3.2
OCDF	7.5	4.8	1.1	2.0	3.9
OCDD	46	25	12	13	24
2378-TCDD Equivalency	**1.93**	**1.14**	**0.41**	**0.58**	**1.01**

Notes:

(1) Sampling was conducted approximately every half hour during air emissions testing and composited for each test day as follows:
03/14/01: 0800, 03/14-01 - 0700, 03/15/01; 03/15/01: 0700, 03/15/01 - 0600, 03/16/01.

< Indicates below analytical detection limit or a non-detect included in an average.

Table 3-30B

ANALYSIS OF AGGREGATE PRODUCT SAMPLES
JCI/UPCYCLE
AGGREGATE KILN TESTING

AGGREGATE PRODUCT					
Sampling date	03/14/01	03/15/01	03/15/01 Duplicate	03/14-15/01 Composite	Average
Sampling times	(1)	(1)	(1)	(1)	
Sampling frequency	30 minutes	30 minutes	30 minutes	30 minutes	
Herbicides - ug/kg					
2,4-D	< 100	< 100	< 100	< 100	< 100
2,4,5-TP (Silvex)	< 100	< 100	< 100	< 100	< 100
Pesticides - ug/kg					
Aldrin	< 10	< 10	< 10	< 10	< 10
alpha-BHC	< 10	< 10	< 10	< 10	< 10
beta-BHC	< 10	< 10	< 10	< 10	< 10
delta-BHC	< 10	< 10	< 10	< 10	< 10
gamma-BHC (Lindane)	< 10	< 10	< 10	< 10	< 10
Chlordane	< 50	< 50	< 50	< 50	< 50
4,4'-DDD	< 10	< 10	< 10	< 10	< 10
4,4'-DDE	< 10	< 10	< 10	< 10	< 10
4,4'-DDT	< 10	< 10	< 10	< 10	< 10
Dieldrin	< 10	< 10	< 10	< 10	< 10
Endosulfan I	< 10	< 10	< 10	< 10	< 10
Endosulfan II	< 10	< 10	< 10	< 10	< 10
Endosulfan sulfate	< 10	< 10	< 10	< 10	< 10
Endrin	< 10	< 10	< 10	< 10	< 10
Endrin aldehyde	< 10	< 10	< 10	< 10	< 10
Heptachlor	< 10	< 10	< 10	< 10	< 10
Heptachlor epoxide	< 10	< 10	< 10	< 10	< 10
Methoxychlor	< 500	< 500	< 500	< 500	< 500
Toxaphene	< 500	< 500	< 500	< 500	< 500
PCB - mg/kg					
PCB 1016	< 0.02	< 0.02	< 0.02	< 0.02	< 0.02
PCB 1221	< 0.02	< 0.02	< 0.02	< 0.02	< 0.02
PCB 1232	< 0.02	< 0.02	< 0.02	< 0.02	< 0.02
PCB 1242	< 0.02	< 0.02	< 0.02	< 0.02	< 0.02
PCB 1248	< 0.02	< 0.02	< 0.02	< 0.02	< 0.02
PCB 1254	< 0.02	< 0.02	< 0.02	< 0.02	< 0.02
PCB 1260	< 0.02	< 0.02	< 0.02	< 0.02	< 0.02
Total PCB	< 0.02	< 0.02	< 0.02	< 0.02	< 0.02

Notes:
(1) Sampling was conducted approximately every half hour during air emissions testing and composited for each test day as follows:
03/14/01: 0800, 03/14-01 - 0700, 03/15/01; 03/15/01: 0700, 03/15/01 - 0600, 03/16/01.
< Indicates below analytical detection limit or a non-detect included in an average.

Table 3-30C

ANALYSIS OF AGGREGATE PRODUCT SAMPLES
JCI/UPCYCLE
AGGREGATE KILN TESTING

AGGREGATE PRODUCT										
Sampling date	03/14/01		03/15/01		03/15/01 Duplicate		03/14-15/01 Composite		Average	
Sampling times	(1)		(1)		(1)		(1)			
Sampling frequency	30 minutes		30 minutes		30 minutes		30 minutes			
Volatile Organic Compounds - ug/kg										
Benzene	<	5	<	5	<	5	<	5	<	5
Bromobenzene	<	5	<	5	<	5	<	5	<	5
Bromochloromethane	<	50	<	50	<	50	<	50	<	50
Bromodichloromethane	<	50	<	50	<	50	<	50	<	50
Bromoform	<	5	<	5	<	5	<	5	<	5
Bromomethane	<	50	<	50	<	50	<	50	<	50
n-Butylbenzene	<	5	<	5	<	5	<	5	<	5
sec-Butylbenzene	<	5	<	5	<	5	<	5	<	5
tert-Butylbenzene	<	5	<	5	<	5	<	5	<	5
Carbon tetrachloride	<	5	<	5	<	5	<	5	<	5
Chlorobenzene	<	5	<	5	<	5	<	5	<	5
Chloroethane	<	5	<	5	<	5	<	5	<	5
Chloroform	<	50	<	50	<	50	<	50	<	50
1-Chlorohexane	<	5	<	5	<	5	<	5	<	5
Chloromethane	<	50	<	50	<	50	<	50	<	50
2-Chlorotoluene	<	5	<	5	<	5	<	5	<	5
4-Chlorotoluene	<	5	<	5	<	5	<	5	<	5
Dibromochloromethane	<	5	<	5	<	5	<	5	<	5
1,2-Dibromo-3-chloropropane	<	5	<	5	<	5	<	5	<	5
1,2-Dibromoethane	<	5	<	5	<	5	<	5	<	5
Dibromomethane	<	5	<	5	<	5	<	5	<	5
1,2-Dichlorobenzene	<	5	<	5	<	5	<	5	<	5
1,3-Dichlorobenzene	<	5	<	5	<	5	<	5	<	5
1,4-Dichlorobenzene	<	5	<	5	<	5	<	5	<	5
Dichlorodifluoromethane	<	5	<	5	<	5	<	5	<	5
1,1-Dichloroethane	<	5	<	5	<	5	<	5	<	5
1,2-Dichloroethane	<	5	<	5	<	5	<	5	<	5
1,1-Dichloroethylene	<	5	<	5	<	5	<	5	<	5
1,2-Dichloroethylene (Total)	<	5	<	5	<	5	<	5	<	5
1,2-Dichloropropane	<	5	<	5	<	5	<	5	<	5
1,3-Dichloropropane	<	5	<	5	<	5	<	5	<	5
2,2-Dichloropropane	<	5	<	5	<	5	<	5	<	5
1,1-Dichloropropylene	<	5	<	5	<	5	<	5	<	5
cis-1,3-Dichloropropylene	<	5	<	5	<	5	<	5	<	5
trans-1,3-Dichloropropylene	<	5	<	5	<	5	<	5	<	5
Ethylbenzene	<	5	<	5	<	5	<	5	<	5
Hexachlorobutadiene	<	5	<	5	<	5	<	5	<	5
Isopropylbenzene	<	5	<	5	<	5	<	5	<	5
p-Isopropyltoluene	<	5	<	5	<	5	<	5	<	5
Methylene chloride	<	5	<	5	<	5	<	5	<	5
Naphthalene	<	5	<	5	<	5	<	5	<	5
n-Propylbenzene	<	5	<	5	<	5	<	5	<	5
Styrene	<	5	<	5	<	5	<	5	<	5
1,1,1,2-Tetrachloroethane	<	5	<	5	<	5	<	5	<	5
1,1,2,2-Tetrachloroethane	<	5	<	5	<	5	<	5	<	5
Tetrachloroethylene	<	5	<	5	<	5	<	5	<	5
Toluene	<	5	<	5	<	5	<	5	<	5
1,2,3-Trichlorobenzene	<	5	<	5	<	5	<	5	<	5
1,2,4-Trichlorobenzene	<	5	<	5	<	5	<	5	<	5
1,1,1-Trichloroethane	<	5	<	5	<	5	<	5	<	5
1,1,2-Trichloroethane	<	5	<	5	<	5	<	5	<	5
Trichloroethylene	<	5	<	5	<	5	<	5	<	5
Trichlorofluoromethane	<	5	<	5	<	5	<	5	<	5
1,2,3-Trichloropropane	<	5	<	5	<	5	<	5	<	5
1,2,3-Trimethylbenzene	<	5	<	5	<	5	<	5	<	5
1,2,4-Trimethylbenzene	<	5	<	5	<	5	<	5	<	5
1,3,5-Trimethylbenzene	<	5	<	5	<	5	<	5	<	5
Vinyl chloride	<	50	<	50	<	50	<	50	<	50
o-Xylene	<	5	<	5	<	5	<	5	<	5
p- & m-Xylenes	<	5	<	5	<	5	<	5	<	5

Notes:

(1) Sampling was conducted approximately every half hour during air emissions testing and composited for each test day as follows:
03/14/01: 0800, 03/14-01 - 0700, 03/15/01; 03/15/01: 0700, 03/15/01 - 0600, 03/16/01.

< Indicates below analytical detection limit or a non-detect included in an average.

Table 3-30D

ANALYSIS OF AGGREGATE PRODUCT SAMPLES
JCI/UPCYCLE
AGGREGATE KILN TESTING

AGGREGATE PRODUCT					
Sampling date	03/14/01	03/15/01	03/15/01 Duplicate	03/14-15/01 Composite	Average
Sampling times	(1)	(1)	(1)	(1)	
Sampling frequency	30 minutes	30 minutes	30 minutes	30 minutes	
Semi-Volatile Organic Compounds - ug/kg					
Acenaphthene	< 330	< 330	< 330	< 330	< 330
Acenaphthylene	< 330	< 330	< 330	< 330	< 330
Anthracene	< 330	< 330	< 330	< 330	< 330
Benzo(a)anthracene	< 330	< 330	< 330	< 330	< 330
Benzo(b)fluoranthene	< 330	< 330	< 330	< 330	< 330
Benzo(k)fluoranthene	< 330	< 330	< 330	< 330	< 330
Benzo(g,h,i)perylene	< 330	< 330	< 330	< 330	< 330
Benzo(a)pyrene	< 330	< 330	< 330	< 330	< 330
Benzyl alcohol	< 330	< 330	< 330	< 330	< 330
Bis(2-chloroethoxy)methane	< 330	< 330	< 330	< 330	< 330
Bis(2-chloroethyl)ether	< 330	< 330	< 330	< 330	< 330
Bis(2-chloroisopropyl)ether	< 330	< 330	< 330	< 330	< 330
Bis(2-ethylhexyl)phthalate	< 330	< 330	< 330	< 330	< 330
4-Bromophenyl phenyl ether	< 330	< 330	< 330	< 330	< 330
Butyl benzyl phthalate	< 330	< 330	< 330	< 330	< 330
4-Chloroaniline	< 330	< 330	< 330	< 330	< 330
2-Chloronaphthalene	< 330	< 330	< 330	< 330	< 330
4-Chloro-3-methyl phenol	< 330	< 330	< 330	< 330	< 330
2-Chlorophenol	< 330	< 330	< 330	< 330	< 330
4-Chlorophenyl phenyl ether	< 330	< 330	< 330	< 330	< 330
Chrysene	< 330	< 330	< 330	< 330	< 330
Dibenz(a,h)anthracene	< 330	< 330	< 330	< 330	< 330
Dibenzofuran	< 330	< 330	< 330	< 330	< 330
Di-n-butylphthalate	< 330	< 330	< 330	< 330	< 330
1,3-Dichlorobenzene	< 330	< 330	< 330	< 330	< 330
1,4-Dichlorobenzene	< 330	< 330	< 330	< 330	< 330
1,2-Dichlorobenzene	< 330	< 330	< 330	< 330	< 330
3,3'-Dichlorobenzidine	< 330	< 330	< 330	< 330	< 330
2,4-Dichlorophenol	< 330	< 330	< 330	< 330	< 330
Diethylphthalate	< 330	< 330	< 330	< 330	< 330
2,4-Dimethylphenol	< 330	< 330	< 330	< 330	< 330
Dimethylphthalate	< 330	< 330	< 330	< 330	< 330
4,6-Dinitro-2-methylphenol	< 1700	< 1700	< 1700	< 1700	< 1700
2,4-Dinitrophenol	< 1700	< 1700	< 1700	< 1700	< 1700
2,4-Dinitrotoluene	< 330	< 330	< 330	< 330	< 330
2,6-Dinitrotoluene	< 330	< 330	< 330	< 330	< 330
Di-n-octylphthalate	< 330	< 330	< 330	< 330	< 330
Fluoranthene	< 330	< 330	< 330	< 330	< 330
Fluorene	< 330	< 330	< 330	< 330	< 330
Hexachlorobenzene	< 330	< 330	< 330	< 330	< 330
Hexachlorobutadiene	< 330	< 330	< 330	< 330	< 330
Hexachlorocyclopentadiene	< 330	< 330	< 330	< 330	< 330
Hexachloroethane	< 330	< 330	< 330	< 330	< 330
Indeno(1,2,3-cd)pyrene	< 330	< 330	< 330	< 330	< 330
Isophorone	< 330	< 330	< 330	< 330	< 330
2-Methylnaphthalene	< 330	< 330	< 330	< 330	< 330
2-Methylphenol	< 330	< 330	< 330	< 330	< 330
4-Methylphenol	< 330	< 330	< 330	< 330	< 330
Naphthalene	< 330	< 330	< 330	< 330	< 330
2-Nitroaniline	< 1700	< 1700	< 1700	< 1700	< 1700
3-Nitroaniline	< 1700	< 1700	< 1700	< 1700	< 1700
4-Nitroaniline	< 1700	< 1700	< 1700	< 1700	< 1700
Nitrobenzene	< 330	< 330	< 330	< 330	< 330
2-Nitrophenol	< 330	< 330	< 330	< 330	< 330
4-Nitrophenol	< 1700	< 1700	< 1700	< 1700	< 1700
N-Nitrosodiphenylamine	< 330	< 330	< 330	< 330	< 330
N-Nitrosodi-n-propylamine	< 330	< 330	< 330	< 330	< 330
Pentachlorophenol	< 1700	< 1700	< 1700	< 1700	< 1700
Phenanthrene	< 330	< 330	< 330	< 330	< 330
Phenol	< 330	< 330	< 330	< 330	< 330
Pyrene	< 330	< 330	< 330	< 330	< 330
1,2,4-Trichlorobenzene	< 330	< 330	< 330	< 330	< 330
2,4,5-Trichlorophenol	< 330	< 330	< 330	< 330	< 330
2,4,6-Trichlorophenol	< 330	< 330	< 330	< 330	< 330

Notes:

(1) Sampling was conducted approximately every half hour during air emissions testing and composited for each test day as follows:
03/14/01: 0800, 03/14-01 - 0700, 03/15/01;- 03/15/01: 0700, 03/15/01 - 0600, 03/16/01.

< Indicates below analytical detection limit or a non-detect included in an average.

Table 3-30E

ANALYSIS OF AGGREGATE PRODUCT SAMPLES
JCI/UPCYCLE
AGGREGATE KILN TESTING

AGGREGATE PRODUCT										
Sampling date	03/14/01		03/15/01		03/15/01 Duplicate		03/14-15/01 Composite		Average	
Sampling times	(1)		(1)		(1)		(1)			
Sampling frequency	30 minutes		30 minutes		30 minutes		30 minutes			
TCLP Volatiles - ug/L										
Benzene	<	1	<	1	<	1	<	1	<	1
Bromobenzene	<	1	<	1	<	1	<	1	<	1
Bromochloromethane	<	10	<	10	<	10	<	10	<	10
Bromodichloromethane	<	10	<	10	<	10	<	10	<	10
Bromoform	<	1	<	1	<	1	<	1	<	1
Bromomethane	<	10	<	10	<	10	<	10	<	10
n-Butylbenzene	<	1	<	1	<	1	<	1	<	1
sec-Butylbenzene	<	1	<	1	<	1	<	1	<	1
tert-Butylbenzene	<	1	<	1	<	1	<	1	<	1
Carbon tetrachloride	<	1	<	1	<	1	<	1	<	1
Chlorobenzene	<	1	<	1	<	1	<	1	<	1
Chloroethane	<	1	<	1	<	1	<	1	<	1
Chloroform	<	10	<	10	<	10	<	10	<	10
1-Chlorohexane	<	1	<	1	<	1	<	1	<	1
Chloromethane	<	10	<	10	<	10	<	10	<	10
2-Chlorotoluene	<	1	<	1	<	1	<	1	<	1
4-Chlorotoluene	<	1	<	1	<	1	<	1	<	1
Dibromochloromethane	<	1	<	1	<	1	<	1	<	1
1,2-Dibromo-3-chloropropane	<	1	<	1	<	1	<	1	<	1
1,2-Dibromoethane	<	1	<	1	<	1	<	1	<	1
Dibromomethane	<	1	<	1	<	1	<	1	<	1
1,2-Dichlorobenzene	<	1	<	1	<	1	<	1	<	1
1,3-Dichlorobenzene	<	1	<	1	<	1	<	1	<	1
1,4-Dichlorobenzene	<	1	<	1	<	1	<	1	<	1
Dichlorodifluoromethane	<	1	<	1	<	1	<	1	<	1
1,1-Dichloroethane	<	1	<	1	<	1	<	1	<	1
1,2-Dichloroethane	<	1	<	1	<	1	<	1	<	1
1,1-Dichloroethylene	<	1	<	1	<	1	<	1	<	1
1,2-Dichloroethylene (Total)	<	1	<	1	<	1	<	1	<	1
1,2-Dichloropropane	<	1	<	1	<	1	<	1	<	1
1,3-Dichloropropane	<	1	<	1	<	1	<	1	<	1
2,2-Dichloropropane	<	1	<	1	<	1	<	1	<	1
1,1-Dichloropropylene	<	1	<	1	<	1	<	1	<	1
cis-1,3-Dichloropropylene	<	1	<	1	<	1	<	1	<	1
trans-1,3-Dichloropropylene	<	1	<	1	<	1	<	1	<	1
Ethylbenzene	<	1	<	1	<	1	<	1	<	1
Hexachlorobutadiene	<	1	<	1	<	1	<	1	<	1
Isopropylbenzene	<	1	<	1	<	1	<	1	<	1
p-Isopropyltoluene	<	1	<	1	<	1	<	1	<	1
Methylene chloride	<	1	<	1	<	1	<	1	<	1
Naphthalene	<	1	<	1	<	1	<	1	<	1
n-Propylbenzene	<	1	<	1	<	1	<	1	<	1
Styrene	<	1	<	1	<	1	<	1	<	1
1,1,1,2-Tetrachloroethane	<	1	<	1	<	1	<	1	<	1
1,1,2,2-Tetrachloroethane	<	1	<	1	<	1	<	1	<	1
Tetrachloroethylene	<	1	<	1	<	1	<	1	<	1
Toluene	<	1	<	1	<	1	<	1	<	1
1,2,3-Trichlorobenzene	<	1	<	1	<	1	<	1	<	1
1,2,4-Trichlorobenzene	<	1	<	1	<	1	<	1	<	1
1,1,1-Trichloroethane	<	1	<	1	<	1	<	1	<	1
1,1,2-Trichloroethane	<	1	<	1	<	1	<	1	<	1
Trichloroethylene	<	1	<	1	<	1	<	1	<	1
Trichlorofluoromethane	<	1	<	1	<	1	<	1	<	1
1,2,3-Trichloropropane	<	1	<	1	<	1	<	1	<	1
1,2,3-Trimethylbenzene	<	1	<	1	<	1	<	1	<	1
1,2,4-Trimethylbenzene	<	1	<	1	<	1	<	1	<	1
1,3,5-Trimethylbenzene	<	1	<	1	<	1	<	1	<	1
Vinyl chloride	<	10	<	10	<	10	<	10	<	10
o-Xylene	<	1	<	1	<	1	<	1	<	1
p- & m-Xylenes	<	1	<	1	<	1	<	1	<	1

Notes:
(1) Sampling was conducted approximately every half hour during air emissions testing and composited for each test day as follows:
03/14/01: 0800, 03/14-01 - 0700, 03/15/01; 03/15/01: 0700, 03/15/01 - 0600, 03/16/01.
< Indicates below analytical detection limit or a non-detect included in an average.

Table 3-30F

ANALYSIS OF AGGREGATE PRODUCT SAMPLES
JCI/UPCYCLE
AGGREGATE KILN TESTING

AGGREGATE PRODUCT					
Sampling date	03/14/01	03/15/01	03/15/01 Duplicate	03/14-15/01 Composite	Average
Sampling times	(1)	(1)	(1)	(1)	
Sampling frequency	30 minutes	30 minutes	30 minutes	30 minutes	
TCLP Semivolatiles - ug/L					
Acenaphthene	< 10	< 10	< 10	< 10	< 10
Acenaphthylene	< 10	< 10	< 10	< 10	< 10
Anthracene	< 10	< 10	< 10	< 10	< 10
Benzo(a)anthracene	< 10	< 10	< 10	< 10	< 10
Benzo(b)fluoranthene	< 10	< 10	< 10	< 10	< 10
Benzo(k)fluoranthene	< 10	< 10	< 10	< 10	< 10
Benzo(g,h,i)perylene	< 10	< 10	< 10	< 10	< 10
Benzo(a)pyrene	< 10	< 10	< 10	< 10	< 10
Benzyl alcohol	< 10	< 10	< 10	< 10	< 10
Bis(2-chloroethoxy)methane	< 10	< 10	< 10	< 10	< 10
Bis(2-chloroethyl)ether	< 10	< 10	< 10	< 10	< 10
Bis(2-chloroisopropyl)ether	< 10	< 10	< 10	< 10	< 10
Bis(2-ethylhexyl)phthalate	< 10	< 10	< 10	< 10	< 10
4-Bromophenyl phenyl ether	< 10	< 10	< 10	< 10	< 10
Butyl benzyl phthalate	< 10	< 10	< 10	< 10	< 10
4-Chloroaniline	< 10	< 10	< 10	< 10	< 10
2-Chloronaphthalene	< 10	< 10	< 10	< 10	< 10
4-Chloro-3-methyl phenol	< 10	< 10	< 10	< 10	< 10
2-Chlorophenol	< 10	< 10	< 10	< 10	< 10
4-Chlorophenyl phenyl ether	< 10	< 10	< 10	< 10	< 10
Chrysene	< 10	< 10	< 10	< 10	< 10
Dibenz(a,h)anthracene	< 10	< 10	< 10	< 10	< 10
Dibenzofuran	< 10	< 10	< 10	< 10	< 10
Di-n-butylphthalate	< 10	< 10	< 10	< 10	< 10
1,3-Dichlorobenzene	< 10	< 10	< 10	< 10	< 10
1,4-Dichlorobenzene	< 10	< 10	< 10	< 10	< 10
1,2-Dichlorobenzene	< 10	< 10	< 10	< 10	< 10
3,3'-Dichlorobenzidine	< 10	< 10	< 10	< 10	< 10
2,4-Dichlorophenol	< 10	< 10	< 10	< 10	< 10
Diethylphthalate	< 10	< 10	< 10	< 10	< 10
2,4-Dimethylphenol	< 10	< 10	< 10	< 10	< 10
Dimethylphthalate	< 10	< 10	< 10	< 10	< 10
4,6-Dinitro-2-methylphenol	< 50	< 50	< 50	< 50	< 50
2,4-Dinitrophenol	< 50	< 50	< 50	< 50	< 50
2,4-Dinitrotoluene	< 10	< 10	< 10	< 10	< 10
2,6-Dinitrotoluene	< 10	< 10	< 10	< 10	< 10
Di-n-octylphthalate	< 10	< 10	< 10	< 10	< 10
Fluoranthene	< 10	< 10	< 10	< 10	< 10
Fluorene	< 10	< 10	< 10	< 10	< 10
Hexachlorobenzene	< 10	< 10	< 10	< 10	< 10
Hexachlorobutadiene	< 10	< 10	< 10	< 10	< 10
Hexachlorocyclopentadiene	< 10	< 10	< 10	< 10	< 10
Hexachloroethane	< 10	< 10	< 10	< 10	< 10
Indeno(1,2,3-cd)pyrene	< 10	< 10	< 10	< 10	< 10
Isophorone	< 10	< 10	< 10	< 10	< 10
2-Methylnaphthalene	< 10	< 10	< 10	< 10	< 10
2-Methylphenol	< 10	< 10	< 10	< 10	< 10
4-Methylphenol	< 10	< 10	< 10	< 10	< 10
Naphthalene	< 10	< 10	< 10	< 10	< 10
2-Nitroaniline	< 50	< 50	< 50	< 50	< 50
3-Nitroaniline	< 50	< 50	< 50	< 50	< 50
4-Nitroaniline	< 50	< 50	< 50	< 50	< 50
Nitrobenzene	< 10	< 10	< 10	< 10	< 10
2-Nitrophenol	< 10	< 10	< 10	< 10	< 10
4-Nitrophenol	< 50	< 50	< 50	< 50	< 50
N-Nitrosodiphenylamine	< 10	< 10	< 10	< 10	< 10
N-Nitrosodi-n-propylamine	< 10	< 10	< 10	< 10	< 10
Pentachlorophenol	< 50	< 50	< 50	< 50	< 50
Phenanthrene	< 10	< 10	< 10	< 10	< 10
Phenol	< 10	< 10	< 10	< 10	< 10
Pyrene	< 10	< 10	< 10	< 10	< 10
1,2,4-Trichlorobenzene	< 10	< 10	< 10	< 10	< 10
2,4,5-Trichlorophenol	< 10	< 10	< 10	< 10	< 10
2,4,6-Trichlorophenol	< 10	< 10	< 10	< 10	< 10

Notes:
(1) Sampling was conducted approximately every half hour during air emissions testing and composited for each test day as follows:
03/14/01: 0800, 03/14-01 - 0700, 03/15/01; 03/15/01: 0700, 03/15/01 - 0600, 03/16/01.
< Indicates below analytical detection limit or a non-detect included in an average.

Table 3-30G

ANALYSIS OF AGGREGATE PRODUCT SAMPLES
JCI/UPCYCLE
AGGREGATE KILN TESTING

AGGREGATE PRODUCT					
Sampling date	03/14/01	03/15/01	03/15/01 Duplicate	03/14-15/01 Composite	Average
Sampling times	(1)	(1)	(1)	(1)	
Sampling frequency	30 minutes	30 minutes	30 minutes	30 minutes	
TCLP Metals - mg/L					
Antimony	< 0.003	< 0.003	< 0.003	0.009	< 0.005
Arsenic	0.013	< 0.005	0.015	< 0.005	< 0.010
Barium	0.242	0.209	0.21	0.23	0.22
Beryllium	< 0.0001	< 0.0001	< 0.0001	< 0.0001	< 0.0001
Cadmium	< 0.005	< 0.005	< 0.005	< 0.005	< 0.005
Chromium	< 0.005	< 0.005	< 0.005	< 0.005	< 0.005
Cobalt	0.017	0.018	0.018	0.015	0.017
Copper	0.117	0.084	0.084	0.113	0.100
Lead	0.007	0.012	0.013	< 0.003	< 0.009
Manganese	0.136	0.122	0.123	0.095	0.119
Nickel	0.046	0.044	0.045	0.043	0.045
Selenium	0.015	0.017	0.015	0.016	0.016
Silver	< 0.005	< 0.005	< 0.005	< 0.005	< 0.005
Thallium	< 0.005	< 0.005	< 0.005	< 0.005	< 0.005
Magnesium	3.02	2.47	2.47	2.34	2.58
Vanadium	0.014	< 0.005	< 0.005	0.017	< 0.010
Zinc	0.383	0.32	0.322	0.341	0.342
Aluminum	1.45	1.74	1.75	1.30	1.56
Calcium	18.7	20.2	20.1	16	18.8
Potassium	5.54	4.32	4.32	3.79	4.49
Iron	38.9	44.1	44.2	29.6	39.2
Mercury	< 0.0005	< 0.0005	< 0.0005	< 0.0005	< 0.0005
MEP Metals (Extraction No. 1) - mg/L					
Aluminum	1.46	1.57	1.57	1.65	1.56
Antimony	< 0.005	< 0.005	< 0.005	< 0.005	< 0.005
Arsenic	< 0.01	< 0.01	< 0.01	< 0.01	< 0.01
Barium	0.151	0.15	0.151	0.155	0.152
Beryllium	< 0.001	< 0.001	< 0.001	< 0.001	< 0.001
Cadmium	< 0.003	< 0.003	< 0.003	< 0.003	< 0.003
Calcium	6.59	6.63	6.64	7.40	6.82
Chromium	< 0.005	< 0.005	< 0.005	< 0.005	< 0.005
Cobalt	0.02	0.025	0.024	0.020	0.022
Copper	0.156	0.168	0.166	0.134	0.156
Lead	< 0.003	< 0.003	< 0.003	< 0.003	< 0.003
Magnesium	0.870	0.860	0.855	0.969	0.889
Manganese	0.046	0.051	0.051	0.058	0.052
Nickel	0.061	0.073	0.071	0.064	0.067
Potassium	1.81	1.68	1.68	1.82	1.75
Selenium	< 0.01	< 0.01	< 0.01	< 0.01	< 0.01
Silver	< 0.005	< 0.005	< 0.005	< 0.005	< 0.005
Sodium	76.9	48.4	48.2	61.0	58.6
Thallium	< 0.01	< 0.01	< 0.01	< 0.01	< 0.01
Vanadium	< 0.01	< 0.01	< 0.01	< 0.01	< 0.01
Zinc	1.10	1.12	1.11	1.20	1.13
Iron	11.7	21.8	21.8	15.9	17.8
Mercury	< 0.0002	< 0.0002	< 0.0002	< 0.0002	< 0.0002

Notes:

(1) Sampling was conducted approximately every half hour during air emissions testing and composited for each test day as follows:
03/14/01: 0800, 03/14-01 - 0700, 03/15/01; 03/15/01: 0700, 03/15/01 - 0600, 03/16/01.

< Indicates below analytical detection limit or a non-detect included in an average.

Table 3-30H

ANALYSIS OF AGGREGATE PRODUCT SAMPLES
JCI/UPCYCLE
AGGREGATE KILN TESTING

AGGREGATE PRODUCT					
Sampling date	03/14/01	03/15/01	03/15/01 Duplicate	03/14-15/01 Composite	Average
Sampling times	(1)	(1)	(1)	(1)	
Sampling frequency	30 minutes	30 minutes	30 minutes	30 minutes	
MEP Metals (Extraction No. 2) - mg/L					
Aluminum	3.25	3.55	3.53	3.54	3.47
Antimony	< 0.005	< 0.005	< 0.005	< 0.005	< 0.005
Arsenic	0.015	0.028	0.028	0.022	0.023
Barium	0.125	0.147	0.146	0.133	0.138
Beryllium	< 0.001	< 0.001	< 0.001	< 0.001	< 0.001
Cadmium	< 0.003	< 0.003	< 0.003	< 0.003	< 0.003
Calcium	9.47	8.67	8.60	9.59	9.08
Chromium	< 0.005	< 0.005	0.005	< 0.005	< 0.005
Cobalt	0.02	0.015	0.015	0.018	0.017
Copper	0.04	0.02	0.02	0.012	0.023
Lead	< 0.003	< 0.003	< 0.003	0.004	< 0.003
Magnesium	1.45	1.58	1.57	1.83	1.608
Manganese	0.108	0.103	0.103	0.113	0.107
Nickel	0.061	0.046	0.047	0.056	0.053
Potassium	1.82	1.68	1.67	1.7	1.72
Selenium	< 0.01	< 0.01	< 0.01	< 0.01	< 0.01
Silver	< 0.005	< 0.005	< 0.005	< 0.005	< 0.005
Sodium	21.5	11.6	11.4	16	15.1
Thallium	< 0.01	< 0.01	< 0.01	< 0.01	< 0.01
Vanadium	0.021	0.02	0.019	0.023	0.02
Zinc	1.42	1.28	1.27	1.24	1.30
Iron	25.5	27.1	27	25	26.2
Mercury	0.0005	< 0.0002	< 0.0002	< 0.0002	< 0.0003
MEP Metals (Extraction No. 3) - mg/L					
Aluminum	3.35	2.9	2.88	2.62	2.94
Antimony	< 0.005	< 0.005	< 0.005	< 0.005	< 0.005
Arsenic	0.021	0.024	0.014	0.015	0.019
Barium	0.143	0.174	0.173	0.164	0.164
Beryllium	< 0.001	< 0.001	< 0.001	< 0.001	< 0.001
Cadmium	< 0.003	< 0.003	< 0.003	< 0.003	< 0.003
Calcium	8.14	6.35	6.31	6.44	6.81
Chromium	< 0.005	0.008	< 0.005	< 0.005	< 0.006
Cobalt	0.012	0.013	0.013	0.011	0.012
Copper	0.007	0.017	0.018	0.016	0.015
Lead	< 0.003	< 0.003	< 0.003	< 0.003	< 0.003
Magnesium	1.63	1.4	1.37	1.61	1.50
Manganese	0.082	0.066	0.066	0.068	0.071
Nickel	0.04	0.046	0.041	0.040	0.042
Potassium	1.62	1.59	1.57	1.44	1.56
Selenium	< 0.01	< 0.01	< 0.01	< 0.01	< 0.01
Silver	< 0.005	< 0.005	< 0.005	< 0.005	< 0.005
Sodium	9.05	7.64	7.68	8.10	8.12
Thallium	< 0.01	< 0.01	< 0.01	< 0.01	< 0.01
Vanadium	0.016	0.012	0.012	0.012	0.01
Zinc	1.41	1.5	1.48	1.42	1.45
Iron	17.9	20	19.9	15.4	18.3
Mercury	< 0.0002	< 0.0002	< 0.0002	< 0.0002	< 0.0002

Notes:
(1) Sampling was conducted approximately every half hour during air emissions testing and composited for each test day as follows:
03/14/01: 0800, 03/14-01 - 0700, 03/15/01; 03/15/01: 0700, 03/15/01 - 0600, 03/16/01.
< Indicates below analytical detection limit or a non-detect included in an average.

Table 3-30I

ANALYSIS OF AGGREGATE PRODUCT SAMPLES
JCI/UPCYCLE
AGGREGATE KILN TESTING

AGGREGATE PRODUCT					
Sampling date	03/14/01	03/15/01	03/15/01 Duplicate	03/14-15/01 Composite	Average
Sampling times	(1)	(1)	(1)	(1)	
Sampling frequency	30 minutes	30 minutes	30 minutes	30 minutes	
MEP Metals (Extraction No. 4) - mg/L					
Aluminum	2.77	2.89	2.88	2.97	2.88
Antimony	< 0.005	< 0.005	< 0.005	< 0.005	< 0.005
Arsenic	0.017	< 0.01	< 0.01	< 0.01	< 0.012
Barium	0.142	0.15	0.148	0.152	0.148
Beryllium	< 0.001	< 0.001	< 0.001	< 0.001	< 0.001
Cadmium	< 0.003	< 0.003	< 0.003	< 0.003	< 0.003
Calcium	10.2	8.04	8.04	8.30	8.65
Chromium	< 0.005	< 0.005	< 0.005	< 0.005	< 0.005
Cobalt	0.019	0.018	0.017	0.016	0.018
Copper	0.017	0.031	0.03	0.03	0.027
Lead	< 0.003	< 0.003	< 0.003	< 0.003	< 0.003
Magnesium	2.37	1.88	1.88	1.95	2.02
Manganese	0.109	0.085	0.085	0.09	0.092
Nickel	0.065	0.058	0.058	0.06	0.060
Potassium	1.9	1.83	1.83	1.89	1.86
Selenium	< 0.01	< 0.01	< 0.01	< 0.01	< 0.01
Silver	< 0.005	< 0.005	< 0.005	< 0.005	< 0.005
Sodium	9.92	9.21	9.17	9.79	9.52
Thallium	< 0.01	< 0.01	< 0.01	0.01	< 0.01
Vanadium	0.016	0.013	0.013	0.013	0.014
Zinc	2.24	2.17	2.16	2.26	2.21
Iron	31.1	32.1	32.0	26.0	30.3
Mercury	< 0.0002	< 0.0002	< 0.0002	< 0.0002	< 0.0002
MEP Metals (Extraction No. 5) - mg/L					
Aluminum	4.41	3.38	3.38	3.63	3.70
Antimony	< 0.005	< 0.005	< 0.005	< 0.005	< 0.005
Arsenic	0.011	0.014	< 0.01	< 0.01	< 0.011
Barium	0.179	0.221	0.219	0.221	0.210
Beryllium	< 0.001	< 0.001	< 0.001	< 0.001	< 0.001
Cadmium	< 0.003	< 0.003	< 0.003	< 0.003	< 0.003
Calcium	5.36	4.45	4.47	4.96	4.81
Chromium	< 0.005	0.006	< 0.005	< 0.005	< 0.005
Cobalt	0.011	0.012	0.011	0.012	0.012
Copper	0.078	0.075	0.074	0.08	0.077
Lead	< 0.003	< 0.003	< 0.003	0.033	< 0.011
Magnesium	1.19	0.989	0.989	1.17	1.08
Manganese	0.054	0.042	0.042	0.050	0.047
Nickel	0.04	0.04	0.04	0.044	0.041
Potassium	1.96	1.78	1.77	1.81	1.83
Selenium	< 0.01	< 0.01	< 0.01	< 0.01	< 0.01
Silver	< 0.005	< 0.005	< 0.005	< 0.005	< 0.005
Sodium	8.01	7.27	7.5	7.39	7.54
Thallium	0.013	< 0.01	< 0.01	< 0.01	< 0.011
Vanadium	0.011	< 0.01	< 0.01	< 0.01	< 0.010
Zinc	1.77	1.78	1.78	1.79	1.78
Iron	15	16.4	16.4	14.5	15.6
Mercury	< 0.0002	< 0.0002	< 0.0002	< 0.0002	< 0.0002

Notes:
(1) Sampling was conducted approximately every half hour during air emissions testing and composited for each test day as follows:
03/14/01: 0800, 03/14-01 - 0700, 03/15/01; 03/15/01: 0700, 03/15/01 - 0600, 03/16/01.
< Indicates below analytical detection limit or a non-detect included in an average.

Table 3-30J

ANALYSIS OF AGGREGATE PRODUCT SAMPLES
JCI/UPCYCLE
AGGREGATE KILN TESTING

AGGREGATE PRODUCT					
Sampling date	03/14/01	03/15/01	03/15/01 Duplicate	03/14-15/01 Composite	Average
Sampling times	(1)	(1)	(1)	(1)	
Sampling frequency	30 minutes	30 minutes	30 minutes	30 minutes	
MEP Metals (Extraction No. 6) - mg/L					
Aluminum	4.21	3.54	3.56	3.98	3.82
Antimony	< 0.005	< 0.005	< 0.005	< 0.005	< 0.005
Arsenic	< 0.01	< 0.01	< 0.01	< 0.01	< 0.01
Barium	0.154	0.199	0.2	0.197	0.188
Beryllium	< 0.001	< 0.001	< 0.001	< 0.001	< 0.001
Cadmium	< 0.003	< 0.003	< 0.003	< 0.003	< 0.003
Calcium	9.19	7.05	7.07	7.96	7.82
Chromium	< 0.005	< 0.005	< 0.005	< 0.005	< 0.005
Cobalt	0.014	0.011	0.011	0.011	0.012
Copper	0.052	0.064	0.064	0.053	0.058
Lead	< 0.003	< 0.003	< 0.003	< 0.003	< 0.003
Magnesium	2.34	1.74	1.75	2.1	1.98
Manganese	0.127	0.074	0.074	0.092	0.092
Nickel	0.054	0.042	0.041	0.046	0.046
Potassium	2.47	2.43	2.43	2.38	2.43
Selenium	< 0.01	< 0.01	< 0.01	< 0.01	< 0.01
Silver	< 0.005	< 0.005	< 0.005	< 0.005	< 0.005
Sodium	11.7	11.6	11.7	11.5	11.63
Thallium	< 0.01	< 0.01	< 0.01	< 0.01	< 0.01
Vanadium	< 0.01	0.011	0.011	0.011	< 0.011
Zinc	3.24	3.3	3.32	3.13	3.25
Iron	33	29.9	30.1	25.2	29.6
Mercury	< 0.0002	< 0.0002	< 0.0002	< 0.0002	< 0.0002
MEP Metals (Extraction No. 7) - mg/L					
Aluminum	2.43	2.76	2.78	2.92	2.72
Antimony	< 0.005	< 0.005	< 0.005	< 0.005	< 0.005
Arsenic	< 0.01	< 0.01	< 0.01	< 0.01	< 0.010
Barium	0.177	0.178	0.178	0.174	0.177
Beryllium	< 0.001	< 0.001	< 0.001	< 0.001	< 0.001
Cadmium	< 0.003	< 0.003	< 0.003	< 0.003	< 0.003
Calcium	7.11	6.48	6.55	7.56	6.93
Chromium	< 0.005	< 0.005	< 0.005	< 0.005	< 0.005
Cobalt	0.022	0.02	0.02	0.02	0.021
Copper	0.089	0.124	0.125	0.082	0.105
Lead	< 0.003	< 0.003	< 0.003	< 0.003	< 0.003
Magnesium	1.58	1.47	1.48	1.81	1.59
Manganese	0.071	0.061	0.062	0.077	0.068
Nickel	0.089	0.077	0.077	0.079	0.081
Potassium	2.67	2.81	2.83	2.66	2.74
Selenium	< 0.01	< 0.01	< 0.01	< 0.01	< 0.01
Silver	< 0.005	< 0.005	< 0.005	< 0.005	< 0.005
Sodium	16.1	15.9	15.9	14.6	15.63
Thallium	< 0.01	< 0.01	< 0.01	< 0.01	< 0.010
Vanadium	< 0.01	< 0.01	< 0.01	0.01	< 0.010
Zinc	4.46	4.53	4.56	4.40	4.49
Iron	29.9	31.0	31.0	30.9	30.7
Mercury	< 0.0002	< 0.0002	< 0.0002	< 0.0002	< 0.0002

Notes:
(1) Sampling was conducted approximately every half hour during air emissions testing and composited for each test day as follows:
03/14/01: 0800, 03/14-01 - 0700, 03/15/01; 03/15/01: 0700, 03/15/01 - 0600, 03/16/01.
< Indicates below analytical detection limit or a non-detect included in an average.

Table 3-30K

ANALYSIS OF AGGREGATE PRODUCT SAMPLES
JCI/UPCYCLE
AGGREGATE KILN TESTING

AGGREGATE PRODUCT					
Sampling date	03/14/01	03/15/01	03/15/01 Duplicate	03/14-15/01 Composite	Average
Sampling times	(1)	(1)	(1)	(1)	
Sampling frequency	30 minutes	30 minutes	30 minutes	30 minutes	
MEP Metals (Extraction No. 8) - mg/L					
Aluminum	4.76	3.4	3.42	4.74	4.08
Antimony	< 0.005	< 0.005	< 0.005	< 0.005	< 0.005
Arsenic	< 0.01	< 0.01	< 0.01	< 0.01	< 0.01
Barium	0.21	0.224	0.224	0.206	0.216
Beryllium	< 0.001	< 0.001	< 0.001	< 0.001	< 0.001
Cadmium	< 0.003	< 0.003	< 0.003	< 0.003	< 0.003
Calcium	5.01	4.16	4.19	4.53	4.47
Chromium	< 0.005	< 0.005	< 0.005	< 0.005	< 0.005
Cobalt	0.015	0.01	0.01	0.009	0.011
Copper	0.206	0.125	0.126	0.144	0.150
Lead	0.006	< 0.003	0.006	< 0.003	< 0.005
Magnesium	1.05	0.883	0.879	0.964	0.944
Manganese	0.05	0.047	0.04	0.041	0.045
Nickel	0.057	0.042	0.041	0.032	0.043
Potassium	2.54	2.22	2.21	2.26	2.31
Selenium	< 0.01	< 0.01	< 0.01	< 0.01	< 0.01
Silver	< 0.005	< 0.005	< 0.005	< 0.005	< 0.005
Sodium	9.65	8.48	8.77	8.17	8.77
Thallium	< 0.01	< 0.01	< 0.01	< 0.01	< 0.010
Vanadium	0.01	0.01	< 0.01	< 0.01	< 0.010
Zinc	2.62	2.35	2.36	2.02	2.34
Iron	21.9	19	19.1	13.3	18.3
Mercury	< 0.0002	< 0.0002	< 0.0002	< 0.0002	< 0.0002
MEP Metals (Extraction No. 9) - mg/L					
Aluminum	11.6	3.18	3.14	3.68	5.40
Antimony	< 0.005	< 0.005	< 0.005	< 0.005	< 0.005
Arsenic	< 0.031	< 0.01	< 0.01	< 0.01	< 0.015
Barium	0.163	0.269	0.269	0.214	0.229
Beryllium	< 0.001	< 0.001	< 0.001	< 0.001	< 0.001
Cadmium	< 0.003	< 0.003	< 0.003	< 0.003	< 0.003
Calcium	15.7	4.19	4.11	4.79	7.20
Chromium	0.011	< 0.005	< 0.005	< 0.005	< 0.007
Cobalt	0.013	0.01	0.009	0.008	0.010
Copper	0.028	0.111	0.108	0.078	0.081
Lead	0.01	< 0.003	0.006	< 0.003	< 0.006
Magnesium	3.78	0.966	0.95	1.25	1.74
Manganese	0.167	0.038	0.036	0.046	0.072
Nickel	0.047	0.033	0.037	0.031	0.037
Potassium	3.06	1.8	1.8	1.82	2.12
Selenium	< 0.01	< 0.01	< 0.01	< 0.01	< 0.01
Silver	< 0.005	< 0.005	< 0.005	< 0.005	< 0.005
Sodium	9.52	8.24	7.92	7.98	8.42
Thallium	< 0.01	< 0.01	< 0.01	< 0.01	< 0.01
Vanadium	0.025	< 0.01	< 0.01	< 0.01	< 0.014
Zinc	2.37	2.12	2.08	2.06	2.16
Iron	32.8	13.9	13.7	11.9	18.1
Mercury	< 0.0002	< 0.0002	< 0.0002	< 0.0002	< 0.0002

Notes:
(1) Sampling was conducted approximately every half hour during air emissions testing and composited for each test day as follows:
03/14/01: 0800, 03/14-01 - 0700, 03/15/01; 03/15/01: 0700, 03/15/01 - 0600, 03/16/01.
< Indicates below analytical detection limit or a non-detect included in an average.

Table 3-31A

ANALYSIS OF CERAMIC FILTER CATCH SAMPLES
JCI/UPCYCLE
AGGREGATE KILN TESTING

BAGHOUSE FILTER CATCH

Sampling date	03/14/01	03/15/01	03/14-16/01 Composite	Average
Sampling times	(1)	(1)	(1)	
Sampling frequency	180 minutes	180 minutes	180 minutes	
Metals - mg/kg (dry)				
Aluminum	16900	21800	19000	19233
Antimony	< 10	< 10	10.8	< 10.3
Arsenic	63.8	92.1	75.3	77.1
Barium	163	215	182	187
Beryllium	< 5	< 5	< 5	< 5
Cadmium	102	175	124	134
Calcium	27300	21900	26500	25233
Chromium	286	287	262	278
Cobalt	< 10	11.1	< 10	< 10.4
Copper	438	522	467	476
Iron	18200	20800	16800	18600
Lead	3560	5810	4270	4547
Magnesium	81800	49800	73900	68500
Manganese	12000	6930	10700	9877
Nickel	142	148	147	146
Potassium	16900	20700	18600	18733
Selenium	26.5	16.1	25.6	22.7
Silver	16.3	19.8	18.1	18.1
Sodium	128000	107000	124000	119667
Thallium	< 10	12.4	13.5	< 12.0
Vanadium	41.8	53.2	45.7	46.9
Zinc	627	1030	765	807
Mercury	9.4	6.0	8.7	8.0
Total Organic Carbon - %, w/w	1.0	0.4	0.4	0.6
PCDD/PCDF - pg/g				
TOTAL TCDF	170	55	160	128
TOTAL PCDF	22	61	160	81
TOTAL HxCDF	210	59	130	133
TOTAL HpCDF	170	50	120	113
TOTAL TCDD	57	19	45	40
TOTAL PCDD	120	38	86	81
TOTAL HxCDD	250	86	180	172
TOTAL HpCDD	280	120	210	203
2378-TCDF	38	12	32	27
2378-TCDD	0.94	0.40	0.72	0.69
12378-PCDF	9.4	3.0	7.7	6.7
23478-PCDF	28	8.1	22	19
12378-PCDD	4.8	1.5	3.6	3.3
123478-HxCDF	34	10	24	23
123678-HxCDF	18	5.5	13	12
234678-HxCDF	37	10	26	24
123789-HxCDF	8.0	2.2	5.1	5.1
123478-HxCDD	5.5	1.8	4.0	3.8
123678-HxCDD	19	6.3	13	13
123789-HxCDD	19	6.3	13	13
1234678-HpCDF	81	24	55	53
1234789-HpCDF	30	8.3	21	20
1234678-HpCDD	150	61	110	107
OCDF	68	20	47	45
OCDD	220	100	170	163
2378-TCDD Equivalency	**38.5**	**11.8**	**28.9**	**26.4**

Notes
(1) Sampling was conducted approximately every 3 hours during air emissions testing and composited for each test day as follows:
03/14/01: 0800, 03/14-01 - 0700, 03/15/01; 03/15/01: 0700, 03/15/01 - 0600, 03/16/01.
< Indicates below analytical detection limit or a non-detect included in an average.

Table 3-31B

ANALYSIS OF CERAMIC FILTER CATCH SAMPLES
JCI/UPCYCLE
AGGREGATE KILN TESTING

BAGHOUSE FILTER CATCH								
Sampling date		03/14/01		03/15/01		03/14-16/01 Composite		Average
Sampling times		(1)		(1)		(1)		
Sampling frequency		180 minutes		180 minutes		180 minutes		
Herbicides - ug/kg								
2,4-D	<	100	<	100	<	100	<	100
2,4,5-TP (Silvex)	<	100	<	100	<	100	<	100
Pesticides - ug/kg								
Aldrin	<	30	<	30	<	30	<	30
alpha-BHC	<	30	<	30	<	30	<	30
beta-BHC	<	30	<	30	<	30	<	30
delta-BHC	<	30	<	30	<	30	<	30
gamma-BHC (Lindane)	<	30	<	30	<	30	<	30
Chlordane	<	150	<	150	<	150	<	150
4,4'-DDD	<	30	<	30	<	30	<	30
4,4'-DDE	<	30	<	30	<	30	<	30
4,4'-DDT	<	30	<	30	<	30	<	30
Dieldrin	<	30	<	30	<	30	<	30
Endosulfan I	<	30	<	30	<	30	<	30
Endosulfan II	<	30	<	30	<	30	<	30
Endosulfan sulfate	<	30	<	30	<	30	<	30
Endrin	<	30	<	30	<	30	<	30
Endrin aldehyde	<	30	<	30	<	30	<	30
Heptachlor	<	30	<	30	<	30	<	30
Heptachlor epoxide	<	30	<	30	<	30	<	30
Methoxychlor	<	1500	<	1500	<	1500	<	1500
Toxaphene	<	1500	<	1500	<	1500	<	1500
PCB - mg/kg								
PCB 1016	<	0.06	<	0.06	<	0.06	<	0.06
PCB 1221	<	0.06	<	0.06	<	0.06	<	0.06
PCB 1232	<	0.06	<	0.06	<	0.06	<	0.06
PCB 1242	<	0.06	<	0.06	<	0.06	<	0.06
PCB 1248	<	0.06	<	0.06	<	0.06	<	0.06
PCB 1254	<	0.06	<	0.06	<	0.06	<	0.06
PCB 1260	<	0.06	<	0.06	<	0.06	<	0.06
Total PCB	<	0.06	<	0.06	<	0.06	<	0.06

Notes

(1) Sampling was conducted approximately every 3 hours during air emissions testing and composited for each test day as follows:
03/14/01: 0800, 03/14-01 - 0700, 03/15/01; 03/15/01: 0700, 03/15/01 - 0600, 03/16/01.

< Indicates below analytical detection limit or a non-detect included in an average.

Table 3-31C

ANALYSIS OF CERAMIC FILTER CATCH SAMPLES
JCI/UPCYCLE
AGGREGATE KILN TESTING

BAGHOUSE FILTER CATCH								
Sampling date		03/14/01		03/15/01		03/14-16/01 Composite		Average
Sampling times		(1)		(1)		(1)		
Sampling frequency		180 minutes		180 minutes		180 minutes		
Volatile Organic Compounds - ug/kg								
Benzene		83		75		120		93
Bromobenzene	<	5	<	5	<	5	<	5
Bromochloromethane	<	50	<	50	<	50	<	50
Bromodichloromethane	<	50	<	50	<	50	<	50
Bromoform	<	5	<	5	<	5	<	5
Bromomethane	<	50	<	50	<	50	<	50
n-Butylbenzene	<	5	<	5	<	5	<	5
sec-Butylbenzene	<	5	<	5	<	5	<	5
tert-Butylbenzene	<	5	<	5	<	5	<	5
Carbon tetrachloride		18		34		24		25
Chlorobenzene	<	5	<	5	<	5	<	5
Chloroethane	<	5	<	5	<	5	<	5
Chloroform		200		220		240		220
1-Chlorohexane	<	5	<	5	<	5	<	5
Chloromethane	<	50	<	50	<	50	<	50
2-Chlorotoluene	<	5	<	5	<	5	<	5
4-Chlorotoluene	<	5	<	5	<	5	<	5
Dibromochloromethane	<	5	<	5	<	5	<	5
1,2-Dibromo-3-chloropropane	<	5	<	5	<	5	<	5
1,2-Dibromoethane	<	5	<	5	<	5	<	5
Dibromomethane	<	5	<	5	<	5	<	5
1,2-Dichlorobenzene	<	5	<	5	<	5	<	5
1,3-Dichlorobenzene	<	5	<	5	<	5	<	5
1,4-Dichlorobenzene	<	5	<	5	<	5	<	5
Dichlorodifluoromethane	<	5	<	5	<	5	<	5
1,1-Dichloroethane	<	5	<	5	<	5	<	5
1,2-Dichloroethane	<	5	<	5	<	5	<	5
1,1-Dichloroethylene	<	5	<	5	<	5	<	5
1,2-Dichloroethylene (Total)	<	5	<	5	<	5	<	5
1,2-Dichloropropane	<	5	<	5	<	5	<	5
1,3-Dichloropropane	<	5	<	5	<	5	<	5
2,2-Dichloropropane	<	5	<	5	<	5	<	5
1,1-Dichloropropylene	<	5	<	5	<	5	<	5
cis-1,3-Dichloropropylene	<	5	<	5	<	5	<	5
trans-1,3-Dichloropropylene	<	5	<	5	<	5	<	5
Ethylbenzene		17		24		64		35
Hexachlorobutadiene	<	5	<	5	<	5	<	5
Isopropylbenzene	<	5	<	5	<	5	<	5
p-Isopropyltoluene	<	5	<	5	<	5	<	5
Methylene chloride	<	5	<	5	<	5	<	5
Naphthalene	<	5	<	5	<	5	<	5
n-Propylbenzene	<	5		7		13	<	8
Styrene	<	5	<	5	<	5	<	5
1,1,1,2-Tetrachloroethane	<	5	<	5	<	5	<	5
1,1,2,2-Tetrachloroethane	<	5	<	5	<	5	<	5
Tetrachloroethylene		6		8		9		8
Toluene	<	94		120		210		141
1,2,3-Trichlorobenzene	<	5	<	5	<	5	<	5
1,2,4-Trichlorobenzene	<	5	<	5	<	5	<	5
1,1,1-Trichloroethane	<	5	<	5	<	5	<	5
1,1,2-Trichloroethane	<	5	<	5	<	5	<	5
Trichloroethylene	<	5	<	5		6	<	5
Trichlorofluoromethane	<	5	<	5	<	5	<	5
1,2,3-Trichloropropane	<	5	<	5	<	5	<	5
1,2,3-Trimethylbenzene	<	5	<	5	<	5	<	5
1,2,4-Trimethylbenzene		24		16		36		25
1,3,5-Trimethylbenzene		12		11		20		14
Vinyl chloride	<	50	<	50	<	50	<	50
o-Xylene		20		23		61		35
p- & m-Xylenes		77		130		290		166

Notes
(1) Sampling was conducted approximately every 3 hours during air emissions testing and composited for each test day as follows:
03/14/01: 0800, 03/14-01 - 0700, 03/15/01; 03/15/01: 0700, 03/15/01 - 0600, 03/16/01.
< Indicates below analytical detection limit or a non-detect included in an average.

Table 3-31D

ANALYSIS OF CERAMIC FILTER CATCH SAMPLES
JCI/UPCYCLE
AGGREGATE KILN TESTING

BAGHOUSE FILTER CATCH								
Sampling date		03/14/01		03/15/01		03/14-16/01 Composite		Average
Sampling times		(1)		(1)		(1)		
Sampling frequency		180 minutes		180 minutes		180 minutes		
Semi-Volatile Organic Compounds - ug/kg								
Acenaphthene	<	1700	<	1700	<	1700	<	1700
Acenaphthylene	<	1700	<	1700	<	1700	<	1700
Anthracene	<	1700	<	1700	<	1700	<	1700
Benzo(a)anthracene	<	1700	<	1700	<	1700	<	1700
Benzo(b)fluoranthene	<	1700	<	1700	<	1700	<	1700
Benzo(k)fluoranthene	<	1700	<	1700	<	1700	<	1700
Benzo(g,h,i)perylene	<	1700	<	1700	<	1700	<	1700
Benzo(a)pyrene	<	1700	<	1700	<	1700	<	1700
Benzyl alcohol	<	1700	<	1700	<	1700	<	1700
Bis(2-chloroethoxy)methane	<	1700	<	1700	<	1700	<	1700
Bis(2-chloroethyl)ether	<	1700	<	1700	<	1700	<	1700
Bis(2-chloroisopropyl)ether	<	1700	<	1700	<	1700	<	1700
Bis(2-ethylhexyl)phthalate	J	180	<	1700	<	1700	<	1193
4-Bromophenyl phenyl ether.	<	1700	<	1700	<	1700	<	1700
Butyl benzyl phthalate	<	1700	<	1700	<	1700	<	1700
4-Chloroaniline	<	1700	<	1700	<	1700	<	1700
2-Chloronaphthalene	<	1700	<	1700	<	1700	<	1700
4-Chloro-3-methyl phenol	<	1700	<	1700	<	1700	<	1700
2-Chlorophenol	<	1700	<	1700	<	1700	<	1700
4-Chlorophenyl phenyl ether	<	1700	<	1700	<	1700	<	1700
Chrysene	<	1700	<	1700	<	1700	<	1700
Dibenz(a,h)anthracene	<	1700	<	1700	<	1700	<	1700
Dibenzofuran	<	1700	<	1700	<	1700	<	1700
Di-n-butylphthalate	<	1700	<	1700	<	1700	<	1700
1,3-Dichlorobenzene	<	1700	<	1700	<	1700	<	1700
1,4-Dichlorobenzene	<	1700	<	1700	<	1700	<	1700
1,2-Dichlorobenzene	<	1700	<	1700	<	1700	<	1700
3,3'-Dichlorobenzidine	<	1700	<	1700	<	1700	<	1700
2,4-Dichlorophenol	<	1700	<	1700	<	1700	<	1700
Diethylphthalate	<	1700	<	1700	<	1700	<	1700
2,4-Dimethylphenol	<	1700	<	1700	<	1700	<	1700
Dimethylphthalate	<	1700	<	1700	<	1700	<	1700
4,6-Dinitro-2-methylphenol	<	8500	<	8500	<	8500	<	8500
2,4-Dinitrophenol	<	8500	<	8500	<	8500	<	8500
2,4-Dinitrotoluene	<	1700	<	1700	<	1700	<	1700
2,6-Dinitrotoluene	<	1700	<	1700	<	1700	<	1700
Di-n-octylphthalate	<	1700	<	1700	<	1700	<	1700
Fluoranthene	<	1700		1700	<	1700	<	1700
Fluorene	J	390	J	390	J	350	J	377
Hexachlorobenzene	<	1700	<	1700	<	1700	<	1700
Hexachlorobutadiene	<	1700	<	1700	<	1700	<	1700
Hexachlorocyclopentadiene	<	1700	<	1700	<	1700	<	1700
Hexachloroethane	<	1700	<	1700	<	1700	<	1700
Indeno(1,2,3-cd)pyrene	<	1700	<	1700	<	1700	<	1700
Isophorone	<	1700	<	1700	<	1700	<	1700
2-Methylnaphthalene	<	1700	<	1700	<	1700	<	1700
2-Methylphenol	<	1700	<	1700	<	1700	<	1700
4-Methylphenol	<	1700	<	1700	<	1700	<	1700
Naphthalene	<	1700	<	1700	<	1700	<	1700
2-Nitroaniline	<	8500	<	8500	<	8500	<	8500
3-Nitroaniline	<	8500	<	8500	<	8500	<	8500
4-Nitroaniline	<	8500	<	8500	<	8500	<	8500
Nitrobenzene	<	1700	<	1700	<	1700	<	1700
2-Nitrophenol	<	1700	<	1700	<	1700	<	1700
4-Nitrophenol	<	8500	<	8500	<	8500	<	8500
N-Nitrosodiphenylamine	<	1700	<	1700	<	1700	<	1700
N-Nitrosodi-n-propylamine	<	1700	<	1700	<	1700	<	1700
Pentachlorophenol	<	8500	<	8500	<	8500	<	8500
Phenanthrene	<	1700	<	1700	<	1700	<	1700
Phenol	<	1700	<	1700	<	1700	<	1700
Pyrene	<	1700	<	1700	<	1700	<	1700
1,2,4-Trichlorobenzene	<	1700	<	1700	<	1700	<	1700
2,4,5-Trichlorophenol	<	1700	<	1700	<	1700	<	1700
2,4,6-Trichlorophenol	<	1700	<	1700	<	1700	<	1700

Notes
(1) Sampling was conducted approximately every 3 hours during air emissions testing and composited for each test day as follows
03/14/01: 0800, 03/14-01 - 0700, 03/15/01; 03/15/01: 0700, 03/15/01 - 0600, 03/16/01.
< Indicates below analytical detection limit or a non-detect included in an average.
J Detected but below the quantitation limit; quantity is estimated

Table 3-31E

ANALYSIS OF CERAMIC FILTER CATCH SAMPLES
JCI/UPCYCLE
AGGREGATE KILN TESTING

BAGHOUSE FILTER CATCH								
Sampling date		03/14/01		03/15/01		03/14-16/01 Composite		Average
Sampling times		(1)		(1)		(1)		
Sampling frequency		180 minutes		180 minutes		180 minutes		
TCLP Volatiles - ug/L								
Benzene		4		3		3		3
Bromobenzene	<	1	<	1	<	1	<	1
Bromochloromethane	<	10	<	10	<	10	<	10
Bromodichloromethane	<	10	<	10	<	10	<	10
Bromoform	<	1	<	1	<	1	<	1
Bromomethane	<	10	<	10	<	10	<	10
n-Butylbenzene	<	1	<	1	<	1	<	1
sec-Butylbenzene	<	1	<	1	<	1	<	1
tert-Butylbenzene	<	1	<	1	<	1	<	1
Carbon tetrachloride	<	1		1	<	1	<	1
Chlorobenzene	<	1	<	1	<	1	<	1
Chloroethane	<	1	<	1	<	1	<	1
Chloroform		10	J	9	J	9	J	9
1-Chlorohexane	<	1	<	1	<	1	<	1
Chloromethane	<	10	<	10	<	10	<	10
2-Chlorotoluene	<	1	<	1	<	1	<	1
4-Chlorotoluene	<	1	<	1	<	1	<	1
Dibromochloromethane	<	1	<	1	<	1	<	1
1,2-Dibromo-3-chloropropane	<	1	<	1	<	1	<	1
1,2-Dibromoethane	<	1	<	1	<	1	<	1
Dibromomethane	<	1	<	1	<	1	<	1
1,2-Dichlorobenzene	<	1	<	1	<	1	<	1
1,3-Dichlorobenzene	<	1	<	1	<	1	<	1
1,4-Dichlorobenzene	<	1	<	1	<	1	<	1
Dichlorodifluoromethane	<	1	<	1	<	1	<	1
1,1-Dichloroethane	<	1	<	1	<	1	<	1
1,2-Dichloroethane	<	1	<	1	<	1	<	1
1,1-Dichloroethylene	<	1	<	1	<	1	<	1
1,2-Dichloroethylene (Total)	<	1	<	1	<	1	<	1
1,2-Dichloropropane	<	1	<	1	<	1	<	1
1,3-Dichloropropane	<	1	<	1	<	1	<	1
2,2-Dichloropropane	<	1	<	1	<	1	<	1
1,1-Dichloropropylene	<	1	<	1	<	1	<	1
cis-1,3-Dichloropropylene	<	1	<	1	<	1	<	1
trans-1,3-Dichloropropylene	<	1	<	1	<	1	<	1
Ethylbenzene	<	1	<	1	<	1	<	1
Hexachlorobutadiene	<	1	<	1	<	1	<	1
Isopropylbenzene	<	1	<	1	<	1	<	1
p-Isopropyltoluene	<	1	<	1	<	1	<	1
Methylene chloride	<	1	<	1	<	1	<	1
Naphthalene	<	1	<	1	<	1	<	1
n-Propylbenzene	<	1	<	1	<	1	<	1
Styrene	<	1	<	1	<	1	<	1
1,1,1,2-Tetrachloroethane	<	1	<	1	<	1	<	1
1,1,2,2-Tetrachloroethane	<	1	<	1	<	1	<	1
Tetrachloroethylene	<	1	<	1	<	1	<	1
Toluene		5		4		4		4
1,2,3-Trichlorobenzene	<	1	<	1	<	1	<	1
1,2,4-Trichlorobenzene	<	1	<	1	<	1	<	1
1,1,1-Trichloroethane	<	1	<	1	<	1	<	1
1,1,2-Trichloroethane	<	1	<	1	<	1	<	1
Trichloroethylene	<	1	<	1	<	1	<	1
Trichlorofluoromethane	<	1	<	1	<	1	<	1
1,2,3-Trichloropropane	<	1	<	1	<	1	<	1
1,2,3-Trimethylbenzene	<	1	<	1	<	1	<	1
1,2,4-Trimethylbenzene	<	1	<	1	<	1	<	1
1,3,5-Trimethylbenzene	<	1	<	1	<	1	<	1
Vinyl chloride	<	10	<	10	<	10	<	10
o-Xylene	<	1	<	1	<	1	<	1
p- & m-Xylenes		1	<	1		1	<	1

Notes:
(1) Sampling was conducted approximately every 3 hours during air emissions testing and composited for each test day as follows:
03/14/01: 0800, 03/14-01 - 0700, 03/15/01; 03/15/01: 0700, 03/15/01 - 0600, 03/16/01.
< Indicates below analytical detection limit or a non-detect included in an average.
J Detected but below the quantitation limit; quantity is estimated

Table 3-31F

ANALYSIS OF CERAMIC FILTER CATCH SAMPLES
JCI/UPCYCLE
AGGREGATE KILN TESTING

BAGHOUSE FILTER CATCH								
Sampling date	03/14/01		03/15/01		03/14-16/01 Composite		Average	
Sampling times	(1)		(1)		(1)			
Sampling frequency	180 minutes		180 minutes		180 minutes			
TCLP Semivolatiles - ug/L								
Acenaphthene	<	10	<	10	<	10	<	10
Acenaphthylene	<	10	<	10	<	10	<	10
Anthracene	<	10	<	10	<	10	<	10
Benzo(a)anthracene	<	10	<	10	<	10	<	10
Benzo(b)fluoranthene	<	10	<	10	<	10	<	10
Benzo(k)fluoranthene	<	10	<	10	<	10	<	10
Benzo(g,h,i)perylene	<	10	<	10	<	10	<	10
Benzo(a)pyrene	<	10	<	10	<	10	<	10
Benzyl alcohol	<	10	<	10	<	10	<	10
Bis(2-chloroethoxy)methane	<	10	<	10	<	10	<	10
Bis(2-chloroethyl)ether	<	10	<	10	<	10	<	10
Bis(2-chloroisopropyl)ether	<	10	<	10	<	10	<	10
Bis(2-ethylhexyl)phthalate	<	10	<	10	<	10	<	10
4-Bromophenyl phenyl ether	<	10	<	10	<	10	<	10
Butyl benzyl phthalate	<	10	<	10	<	10	<	10
4-Chloroaniline	<	10	<	10	<	10	<	10
2-Chloronaphthalene	<	10	<	10	<	10	<	10
4-Chloro-3-methyl phenol	<	10	<	10	<	10	<	10
2-Chlorophenol	<	10	<	10	<	10	<	10
4-Chlorophenyl phenyl ether	<	10	<	10	<	10	<	10
Chrysene	<	10	<	10	<	10	<	10
Dibenz(a,h)anthracene	<	10	<	10	<	10	<	10
Dibenzofuran	<	10	<	10	<	10	<	10
Di-n-butylphthalate	<	10	<	10	<	10	<	10
1,3-Dichlorobenzene	<	10	<	10	<	10	<	10
1,4-Dichlorobenzene	<	10	<	10	<	10	<	10
1,2-Dichlorobenzene	<	10	<	10	<	10	<	10
3,3'-Dichlorobenzidine	<	10	<	10	<	10	<	10
2,4-Dichlorophenol	<	10	<	10	<	10	<	10
Diethylphthalate	<	10	<	10	<	10	<	10
2,4-Dimethylphenol	<	10	<	10	<	10	<	10
Dimethylphthalate	<	10	<	10	<	10	<	10
4,6-Dinitro-2-methylphenol	<	50	<	50	<	50	<	50
2,4-Dinitrophenol	<	50	<	50	<	50	<	50
2,4-Dinitrotoluene	<	10	<	10	<	10	<	10
2,6-Dinitrotoluene	<	10	<	10	<	10	<	10
Di-n-octylphthalate	<	10	<	10	<	10	<	10
Fluoranthene	<	10	<	10	<	10	<	10
Fluorene	<	10	<	10	<	10	<	10
Hexachlorobenzene	<	10	<	10	<	10	<	10
Hexachlorobutadiene	<	10	<	10	<	10	<	10
Hexachlorocyclopentadiene	<	10	<	10	<	10	<	10
Hexachloroethane	<	10	<	10	<	10	<	10
Indeno(1,2,3-cd)pyrene	<	10	<	10	<	10	<	10
Isophorone	<	10	<	10	<	10	<	10
2-Methylnaphthalene	<	10	<	10	<	10	<	10
2-Methylphenol	<	10	<	10	<	10	<	10
4-Methylphenol	<	10	<	10	<	10	<	10
Naphthalene	<	10	<	10	<	10	<	10
2-Nitroaniline	<	50	<	50	<	50	<	50
3-Nitroaniline	<	50	<	50	<	50	<	50
4-Nitroaniline	<	50	<	50	<	50	<	50
Nitrobenzene	<	10	<	10	<	10	<	10
2-Nitrophenol	<	10	<	10	<	10	<	10
4-Nitrophenol	<	50	<	50	<	50	<	50
N-Nitrosodiphenylamine	<	10	<	10	<	10	<	10
N-Nitrosodi-n-propylamine	<	10	<	10	<	10	<	10
Pentachlorophenol	<	50	<	50	<	50	<	50
Phenanthrene	<	10	<	10	<	10	<	10
Phenol	<	10	<	10	<	10	<	10
Pyrene	<	10	<	10	<	10	<	10
1,2,4-Trichlorobenzene	<	10	<	10	<	10	<	10
2,4,5-Trichlorophenol	<	10	<	10	<	10	<	10
2,4,6-Trichlorophenol	<	10	<	10	<	10	<	10

Notes:
(1) Sampling was conducted approximately every 3 hours during air emissions testing and composited for each test day as follows
03/14/01: 0800, 03/14-01 - 0700, 03/15/01; 03/15/01: 0700, 03/15/01 - 0600, 03/16/01.
< Indicates below analytical detection limit or a non-detect included in an average.

Table 3-31G

ANALYSIS OF CERAMIC FILTER CATCH SAMPLES
JCI/UPCYCLE
AGGREGATE KILN TESTING

BAGHOUSE FILTER CATCH				
Sampling date	03/14/01	03/15/01	03/14-16/01 Composite	Average
Sampling times	(1)	(1)	(1)	
Sampling frequency	180 minutes	180 minutes	180 minutes	
TCLP Metals - mg/L				
Antimony	0.126	0.168	0.139	0.144
Arsenic	< 0.05	< 0.05	< 0.05	< 0.05
Barium	0.143	0.108	< 0.05	< 0.10
Beryllium	< 0.001	< 0.001	< 0.001	< 0.001
Cadmium	< 0.05	< 0.05	< 0.05	< 0.05
Chromium	0.84	0.469	0.803	0.704
Cobalt	< 0.05	< 0.05	< 0.05	< 0.05
Copper	< 0.05	< 0.05	< 0.05	< 0.05
Lead	2.63	2.34	4.47	3.15
Manganese	0.092	< 0.05	0.159	< 0.100
Nickel	< 0.05	< 0.05	< 0.05	< 0.05
Selenium	0.353	0.394	0.379	0.375
Silver	< 0.05	< 0.05	0.068	< 0.056
Thallium	0.416	0.343	0.488	0.416
Magnesium	239	295	259	264
Vanadium	< 0.05	< 0.05	< 0.05	< 0.05
Zinc	< 0.05	< 0.05	< 0.05	< 0.05
Aluminum	0.552	0.674	0.659	0.628
Calcium	24.5	30.1	26.0	26.9
Potassium	595	673	698	655
Iron	< 0.05	< 0.05	< 0.05	< 0.05
Mercury	0.0520	0.0536	0.0318	0.0458
MEP Metals (Extraction No. 1) - mg/L				
Aluminum	0.087	0.148	0.067	0.101
Antimony	< 0.005	< 0.005	< 0.005	< 0.005
Arsenic	< 0.01	< 0.01	< 0.01	< 0.01
Barium	0.136	0.172	0.117	0.142
Beryllium	< 0.001	< 0.001	< 0.001	< 0.001
Cadmium	< 0.003	< 0.003	< 0.003	< 0.003
Calcium	8.17	9.45	9.44	9.02
Chromium	0.194	0.152	0.166	0.171
Cobalt	< 0.005	< 0.005	< 0.005	< 0.005
Copper	0.006	0.007	< 0.005	< 0.006
Lead	< 0.003	< 0.003	< 0.003	< 0.003
Magnesium	67.6	88.4	63.8	73.3
Manganese	< 0.005	< 0.005	< 0.005	< 0.005
Nickel	0.008	0.005	0.009	0.007
Potassium	88.1	89.6	63.5	80.4
Selenium	0.05	0.093	0.045	0.063
Silver	< 0.005	< 0.005	< 0.005	< 0.005
Sodium	1070	841	690	867
Thallium	0.062	0.054	0.049	0.055
Vanadium	< 0.01	< 0.01	< 0.01	< 0.01
Zinc	0.045	0.072	0.024	0.047
Iron	< 0.005	< 0.005	< 0.005	< 0.005
Mercury	0.0055	0.0098	0.0092	0.0082

Notes:
(1) Sampling was conducted approximately every 3 hours during air emissions testing and composited for each test day as follows:
03/14/01: 0800, 03/14-01 - 0700, 03/15/01; 03/15/01: 0700, 03/15/01 - 0600, 03/16/01.
< Indicates below analytical detection limit or a non-detect included in an average.

Table 3-31H

ANALYSIS OF CERAMIC FILTER CATCH SAMPLES
JCI/UPCYCLE
AGGREGATE KILN TESTING

BAGHOUSE FILTER CATCH								
Sampling date		03/14/01		03/15/01		03/14-16/01 Composite		Average
Sampling times		(1)		(1)		(1)		
Sampling frequency		180 minutes		180 minutes		180 minutes		
MEP Metals (Extraction No. 2) - mg/L								
Aluminum		0.053		0.034		0.038		0.042
Antimony	<	0.005	<	0.005	<	0.005	<	0.005
Arsenic	<	0.01	<	0.01	<	0.01	<	0.01
Barium		0.118		0.115		0.014		0.082
Beryllium	<	0.001	<	0.001	<	0.001	<	0.001
Cadmium	<	0.003	<	0.003	<	0.003	<	0.003
Calcium		7.68		6.89		8.90		7.82
Chromium		0.072		0.081		0.074		0.076
Cobalt	<	0.005	<	0.005	<	0.005	<	0.005
Copper	<	0.005	<	0.005	<	0.005	<	0.005
Lead	<	0.003	<	0.003	<	0.003	<	0.003
Magnesium		73.6		70.5		63.1		69.1
Manganese	<	0.005	<	0.005	<	0.005	<	0.005
Nickel	<	0.005	<	0.005	<	0.005	<	0.005
Potassium		19.1		35.2		17.9		24.1
Selenium		0.02		0.062		0.027		0.036
Silver	<	0.005	<	0.005	<	0.005	<	0.005
Sodium		255		345		220		273
Thallium		0.015		0.024	<	0.01	<	0.016
Vanadium	<	0.01	<	0.01	<	0.01	<	0.01
Zinc		0.019	<	0.02	<	0.02	<	0.020
Iron	<	0.005	<	0.005	<	0.005	<	0.005
Mercury		0.0007		0.0008	<	0.0002	<	0.0006
MEP Metals (Extraction No. 3) - mg/L								
Aluminum		0.035		0.029		0.054		0.039
Antimony	<	0.005	<	0.005	<	0.005	<	0.005
Arsenic	<	0.01	<	0.01	<	0.01	<	0.01
Barium		0.132		0.167		0.167		0.155
Beryllium	<	0.001	<	0.001	<	0.001	<	0.001
Cadmium	<	0.003	<	0.003	<	0.003	<	0.003
Calcium		8.21		8.98		8.81		8.67
Chromium		0.039		0.04		0.038		0.039
Cobalt	<	0.005	<	0.005	<	0.005	<	0.005
Copper	<	0.005	<	0.005	<	0.005	<	0.005
Lead	<	0.003	<	0.003	<	0.003	<	0.003
Magnesium		58.3		46.2		56.1		53.5
Manganese	<	0.005	<	0.005		0.005	<	0.005
Nickel	<	0.005	<	0.005	<	0.005	<	0.005
Potassium		4.18		7.74		2.58		4.83
Selenium	<	0.01		0.024		0.013		0.016
Silver	<	0.005	<	0.005	<	0.005	<	0.005
Sodium		61.0		89.5		40.3		63.6
Thallium		0.013	<	0.01		0.011	<	0.011
Vanadium	<	0.01	<	0.01	<	0.01	<	0.01
Zinc	<	0.02		0.026		0.045	<	0.030
Iron	<	0.005	<	0.005	<	0.005	<	0.005
Mercury		0.0017		0.0015		0.0049		0.0027

Notes:

(1) Sampling was conducted approximately every 3 hours during air emissions testing and composited for each test day as follows:
03/14/01: 0800, 03/14-01 - 0700, 03/15/01; 03/15/01: 0700, 03/15/01 - 0600, 03/16/01.

< Indicates below analytical detection limit or a non-detect included in an average.

Table 3-31l

ANALYSIS OF CERAMIC FILTER CATCH SAMPLES
JCI/UPCYCLE
AGGREGATE KILN TESTING

BAGHOUSE FILTER CATCH				
Sampling date	03/14/01	03/15/01	03/14-16/01 Composite	Average
Sampling times	(1)	(1)	(1)	
Sampling frequency	180 minutes	180 minutes	180 minutes	
MEP Metals (Extraction No. 4) - mg/L				
Aluminum	0.05	0.052	0.062	0.055
Antimony	< 0.005	< 0.005	< 0.005	< 0.005
Arsenic	< 0.01	< 0.01	< 0.01	< 0.01
Barium	0.236	0.802	0.224	0.421
Beryllium	< 0.001	< 0.001	< 0.001	< 0.001
Cadmium	< 0.003	< 0.003	< 0.003	< 0.003
Calcium	7.78	14.5	8.39	10.2
Chromium	0.042	0.048	0.041	0.044
Cobalt	< 0.005	< 0.005	< 0.005	< 0.005
Copper	< 0.005	0.019	< 0.005	< 0.010
Lead	< 0.003	< 0.003	< 0.003	< 0.003
Magnesium	55.1	39.0	54.5	49.5
Manganese	< 0.005	< 0.005	< 0.005	< 0.005
Nickel	< 0.005	0.006	< 0.005	< 0.005
Potassium	4.69	11.3	3.34	6.44
Selenium	< 0.01	0.024	< 0.01	0.015
Silver	< 0.005	< 0.005	< 0.005	< 0.005
Sodium	32.9	56.1	26.0	38.3
Thallium	0.017	0.017	< 0.01	< 0.015
Vanadium	< 0.01	< 0.01	< 0.01	< 0.01
Zinc	0.024	0.049	0.022	< 0.032
Iron	< 0.005	< 0.005	< 0.005	< 0.005
Mercury	0.0008	< 0.0002	< 0.0002	< 0.0004
MEP Metals (Extraction No. 5) - mg/L				
Aluminum	0.043	0.097	0.063	0.068
Antimony	< 0.005	< 0.005	< 0.005	< 0.005
Arsenic	< 0.01	< 0.01	< 0.01	< 0.01
Barium	0.52	0.684	0.319	0.508
Beryllium	< 0.001	< 0.001	< 0.001	< 0.001
Cadmium	< 0.003	< 0.003	< 0.003	< 0.003
Calcium	10.3	19.3	9.94	13.2
Chromium	0.034	0.027	0.039	0.033
Cobalt	< 0.005	< 0.005	< 0.005	< 0.005
Copper	< 0.005	0.016	0.009	< 0.010
Lead	< 0.003	< 0.003	< 0.003	< 0.003
Magnesium	47.4	33.9	50.3	43.9
Manganese	< 0.005	< 0.005	< 0.005	< 0.005
Nickel	< 0.005	< 0.005	< 0.005	< 0.005
Potassium	3.51	3.28	3.21	3.33
Selenium	< 0.01	0.014	0.013	< 0.012
Silver	< 0.005	< 0.005	< 0.005	< 0.005
Sodium	16.0	28.1	26.8	23.6
Thallium	< 0.01	< 0.01	< 0.01	< 0.010
Vanadium	< 0.01	< 0.01	< 0.01	< 0.01
Zinc	0.024	0.086	0.045	0.052
Iron	< 0.005	< 0.005	< 0.005	< 0.005
Mercury	0.0006	< 0.0002	0.0006	< 0.0005

Notes:
(1) Sampling was conducted approximately every 3 hours during air emissions testing and composited for each test day as follow
03/14/01: 0800, 03/14-01 - 0700, 03/15/01; 03/15/01: 0700, 03/15/01 - 0600, 03/16/01.
< Indicates below analytical detection limit or a non-detect included in an average.

Table 3-31J

ANALYSIS OF CERAMIC FILTER CATCH SAMPLES
JCI/UPCYCLE
AGGREGATE KILN TESTING

BAGHOUSE FILTER CATCH				
Sampling date	03/14/01	03/15/01	03/14-16/01 Composite	Average
Sampling times	(1)	(1)	(1)	
Sampling frequency	180 minutes	180 minutes	180 minutes	
MEP Metals (Extraction No. 6) - mg/L				
Aluminum	0.031	0.031	0.032	0.031
Antimony	< 0.005	< 0.005	< 0.005	< 0.005
Arsenic	< 0.01	0.024	< 0.01	< 0.01
Barium	0.475	1.71	0.553	0.913
Beryllium	< 0.001	< 0.001	< 0.001	< 0.001
Cadmium	< 0.003	< 0.003	< 0.003	< 0.003
Calcium	12.7	23.7	11.1	15.8
Chromium	0.058	0.036	0.061	0.052
Cobalt	< 0.005	< 0.005	< 0.005	< 0.005
Copper	< 0.005	< 0.005	< 0.005	< 0.005
Lead	< 0.003	0.011	< 0.003	< 0.006
Magnesium	29.9	40.6	36.9	35.8
Manganese	< 0.005	< 0.005	< 0.005	< 0.005
Nickel	< 0.005	< 0.005	< 0.005	< 0.005
Potassium	27.7	5.90	26.7	20.1
Selenium	0.019	0.013	0.022	< 0.018
Silver	< 0.005	< 0.005	< 0.005	< 0.005
Sodium	60.6	30.2	< 0.05	< 30.3
Thallium	< 0.01	< 0.01	< 0.01	< 0.010
Vanadium	< 0.01	< 0.01	< 0.01	< 0.01
Zinc	< 0.02	< 0.02	< 0.02	0.020
Iron	< 0.005	< 0.005	< 0.005	< 0.005
Mercury	< 0.0002	0.0006	0.0006	< 0.0005
MEP Metals (Extraction No. 7) - mg/L				
Aluminum	0.15	0.066	0.098	0.105
Antimony	< 0.005	< 0.005	0.013	< 0.008
Arsenic	< 0.01	0.041	0.014	< 0.022
Barium	0.441	1.96	0.709	1.04
Beryllium	< 0.001	< 0.001	< 0.001	< 0.001
Cadmium	< 0.003	< 0.003	< 0.003	< 0.003
Calcium	14.9	25.1	15.6	18.5
Chromium	0.043	0.029	0.045	0.039
Cobalt	< 0.005	< 0.005	< 0.005	< 0.005
Copper	0.008	< 0.005	< 0.005	< 0.006
Lead	0.07	0.025	0.042	0.046
Magnesium	21.4	35.9	23.5	26.9
Manganese	0.016	0.009	0.011	0.012
Nickel	< 0.005	< 0.005	< 0.005	< 0.005
Potassium	24.8	5.11	26.1	18.7
Selenium	0.015	< 0.01	0.018	< 0.014
Silver	< 0.005	< 0.005	< 0.005	< 0.005
Sodium	69.4	29.7	70.1	56.4
Thallium	< 0.01	< 0.01	< 0.01	< 0.010
Vanadium	< 0.01	< 0.01	< 0.01	< 0.01
Zinc	0.145	0.05	0.103	0.099
Iron	0.064	0.014	0.010	0.029
Mercury	0.0006	0.0006	< 0.0002	< 0.0005

Notes:
(1) Sampling was conducted approximately every 3 hours during air emissions testing and composited for each test day as follow
03/14/01: 0800, 03/14-01 - 0700, 03/15/01; 03/15/01: 0700, 03/15/01 - 0600, 03/16/01.
< Indicates below analytical detection limit or a non-detect included in an average.

Table 3-31K

ANALYSIS OF CERAMIC FILTER CATCH SAMPLES
JCI/UPCYCLE
AGGREGATE KILN TESTING

BAGHOUSE FILTER CATCH				
Sampling date	03/14/01	03/15/01	03/14-16/01 Composite	Average
Sampling times	(1)	(1)	(1)	
Sampling frequency	180 minutes	180 minutes	180 minutes	
MEP Metals (Extraction No. 8) - mg/L				
Aluminum	0.03	0.061	0.038	0.043
Antimony	< 0.005	< 0.005	< 0.005	< 0.005
Arsenic	< 0.01	0.079	< 0.01	< 0.03
Barium	0.455	1.98	0.73	1.06
Beryllium	< 0.001	< 0.001	< 0.001	< 0.001
Cadmium	< 0.003	< 0.003	< 0.003	< 0.003
Calcium	19.8	28.9	19.7	22.8
Chromium	0.034	0.028	0.034	0.032
Cobalt	< 0.005	< 0.005	< 0.005	< 0.005
Copper	< 0.005	< 0.005	< 0.005	< 0.005
Lead	< 0.003	0.018	< 0.003	< 0.008
Magnesium	37.7	41.8	38.9	39.5
Manganese	< 0.005	0.009	< 0.005	< 0.006
Nickel	< 0.005	< 0.005	< 0.005	< 0.005
Potassium	12.6	3.93	12.9	9.81
Selenium	< 0.01	< 0.01	< 0.01	< 0.010
Silver	< 0.005	< 0.005	< 0.005	< 0.005
Sodium	37.1	21.3	37.6	32.0
Thallium	< 0.01	< 0.01	0.012	< 0.011
Vanadium	< 0.01	< 0.01	< 0.01	< 0.01
Zinc	< 0.02	0.045	< 0.02	0.028
Iron	< 0.005	< 0.005	< 0.005	< 0.005
Mercury	< 0.0002	< 0.0002	< 0.0002	< 0.0002
MEP Metals (Extraction No. 9) - mg/L				
Aluminum	0.037	0.059	0.032	0.043
Antimony	< 0.005	< 0.005	< 0.005	< 0.005
Arsenic	< 0.01	0.082	0.016	< 0.04
Barium	0.573	1.68	0.873	1.04
Beryllium	< 0.001	< 0.001	< 0.001	< 0.001
Cadmium	< 0.003	< 0.003	< 0.003	< 0.003
Calcium	23	31.5	23.5	26.0
Chromium	0.02	0.021	0.022	0.021
Cobalt	< 0.005	< 0.005	< 0.005	< 0.005
Copper	< 0.005	< 0.005	< 0.005	< 0.005
Lead	0.006	0.022	< 0.003	< 0.010
Magnesium	36.6	36.9	39.8	37.8
Manganese	< 0.005	0.007	< 0.005	< 0.006
Nickel	< 0.005	< 0.005	< 0.005	< 0.005
Potassium	6.2	3.15	6.71	5.35
Selenium	< 0.01	< 0.01	< 0.01	< 0.01
Silver	< 0.005	< 0.005	< 0.005	< 0.005
Sodium	21.4	19	24.5	21.6
Thallium	< 0.01	< 0.01	< 0.01	< 0.01
Vanadium	< 0.01	< 0.01	< 0.01	< 0.01
Zinc	0.027	0.051	0.023	0.034
Iron	< 0.005	< 0.005	< 0.005	< 0.005
Mercury	< 0.0002	< 0.0002	< 0.0002	< 0.0002

Notes:
(1) Sampling was conducted approximately every 3 hours during air emissions testing and composited for each test day as follow
03/14/01: 0800, 03/14-01 - 0700, 03/15/01; 03/15/01: 0700, 03/15/01 - 0600, 03/16/01.
< Indicates below analytical detection limit or a non-detect included in an average.

Table 3-32

ANALYSIS OF SCRUBBER MAKEUP WATER SAMPLES
JCI/UPCYCLE
AGGREGATE KILN TESTING

SCRUBBER MAKEUP WATER						
Sampling date		03/14-16/01 Composite		03/14-16/01 Composite Duplicate		Average
Sampling times		(1)		(1)		
Sampling frequency		120 minutes		120 minutes		
Metals - ug/L						
Aluminum	<	5		12.5	<	9
Antimony	<	5	<	5	<	5
Arsenic	<	10	<	10	<	10
Barium		20.6		20.7		21
Beryllium	<	1	<	1	<	1
Cadmium	<	3	<	3	<	3
Calcium		57200		57000		57100
Chromium	<	5	<	5	<	5
Cobalt	<	5	<	5	<	5
Copper		65.8		62.5		64
Lead	<	3	<	3	<	3
Magnesium		23700		23900		23800
Manganese	<	5	<	5	<	5
Nickel	<	5	<	5	<	5
Potassium		1750		1740		1745
Selenium	<	10	<	10	<	10
Silver	<	5	<	5	<	5
Sodium		4510		4750		4630
Thallium	<	10	<	10	<	10
Vanadium	<	10	<	10	<	10
Zinc		27.4		26.4		27
Iron		12.3		10.7		12
Mercury		0.0016	<	0.0002	<	0.0009
Total Halogens (Cl, Br, and F)- mg/L		0.064		0.14		0.10

Notes:
(1) Sampling was conducted every two hours during air emissions testing and composited for the entire test program: 0800, 03/14/01 - 0600, 03/16/01.
< Indicates below analytical detection limit or a non-detect included in an average.

Table 3-33

ANALYSIS OF SCRUBBER LIQUOR SAMPLES
JCI/UPCYCLE
AGGREGATE KILN TESTING

SCRUBBER LIQUOR										
Sampling date		03/14/01		03/15/01		03/16/01		03/16/01 Duplicate		Average
Sampling time		08:00		07:00		05:00		05:00		
Metals - ug/L										
Aluminum		2,490		2,640		4,160		2,890		3,045
Antimony	<	50	<	50		199	<	50	<	87
Arsenic	<	100	<	100	<	100	<	100	<	100
Barium	<	100	<	100	<	100	<	100	<	100
Beryllium	<	10	<	10	<	10	<	10	<	10
Cadmium	<	30	<	30	<	30	<	30	<	30
Calcium		14,100		7,340		9,880		9,260		10,145
Chromium		209		178		177		174		185
Cobalt	<	50	<	50	<	50	<	50	<	50
Copper		385		683		507		491		517
Lead		112		128		104		99		111
Magnesium		122,000		89,600		96,400		94,300		100,575
Manganese		332		167		140		120		190
Nickel	<	50	<	50	<	50	<	50	<	50
Potassium		55,400		56,200		65,300		64,100		60,250
Selenium		110	<	100		103	<	100	<	103
Silver	<	50	<	50	<	50	<	50	<	50
Sodium		21,500,000		18,200,000		17,800,000		17,800,000		18,825,000
Thallium	<	100	<	100	<	100	<	100	<	100
Vanadium	<	100	<	100	<	100	<	100	<	100
Zinc		254		266		263		229		253
Iron		1,100		1,090		1,950		1,120		1,315
Mercury		0.48		0.72		0.58		NA		0.59
Total Halogens (Cl, Br, and F) - mg/L		0.29		3.1		4.3		4.7		3.1

Notes:
< Indicates below analytical detection limit or a non-detect included in an average.
NA Not analyzed.

STS CONSULTANTS

CONSULTING ENGINEERS

JCI / Upcycle Associates Sediment Decontamination Pilot Project

STS Project No: 31870
May 30, 2001
Revised June 21, 2001

STS PROJECT NO. 31870
LABORATORY TESTING PROGRAM
OF UPCYCLE LIGHTWEIGHT AGGREGATE

Scope of Services

The scope of services provided by STS Consultants, Ltd. was to provide laboratory testing services for Upcycle lightweight aggregate. The lightweight aggregate is a product processed by extrusion and heat. The process produces an inert cylindrical particle approximately 1½ inch in diameter and 2½ inches long on the average. The testing included performance of particle size distribution analysis on both virgin and tested material, density determination by compaction and vibratory methods and strength determinations using triaxial compression and direct shear methods as well as utilizing the two methods of compaction to compare the values obtained.

Particle Size Determination

The particle size analyses were performed in accordance with ASTM C 136. One test was conducted on a representative portion of the virgin sample. Particle size analyses were later performed on each triaxial, direct shear and compaction point to provide information concerning the material degradation when subjected to the testing processes. The particle size distribution curves have been included in a later section of this report. We have also included particle size distribution curves that provide comparison graphs for the triaxial, direct shear and Proctor compaction points.

Density Determination

Two ASTM (American Society for Testing and Materials) density determinations were conducted on the lightweight aggregate. The first was a standard compaction test following ASTM D 698 Method C. This test utilizes an impact method of compacting the material. The test method calls for the use of a 5.5-pound, pie shaped rammer dropping a distance of twelve inches. Fifty-six blows per layer are expended with the total compactive effort utilizing a total of three approximately equal layers. The material is compacted into a 6 inch diameter by 4½ inch high steel mold having an internal volume of 0.075 cubic feet.

The second method of compaction is the relative density test, which incorporates two separate ASTM methods. Those were the minimum density index test, ASTM D 4254 and the maximum density index test ASTM D 4253. The minimum index determination was conducted by placing the material, using a small scoop, into a rigid mold as gently as possible until the level of material reached the top of the mold. The weight of the material is recorded and based upon the volume of the mold, the minimum density value is determined.

The maximum density index is performed by placing the material into a steel mold and applying a 2 lb./ in^2 surcharge to the top. The mold and weight are anchored to a vibratory table. The table is vibrated at 60 Hz for 8 minutes causing the material to densify. When completed, the material is struck off at the top of the mold and the specimen weight recorded. The maximum index density is determined. Combining the two values with actual density measurements allows the determination of the relative density of the material.

Strength Testing Specimen Preparation

Prior to the strength testing, the aggregate was submerged in ordinary tap water to saturate. This process was necessary especially for the triaxial testing so accurate specimen volume change measurements could be made. The material was allowed to hydrate for a minimum of forty-eight hours. When ready for testing the material was drained and towel dried, to a saturated surface dry condition (SSD) and mixed thoroughly. On the average (in a saturated condition) the moisture content ranged from 14.0 to 24.2 percent.

Direct Shear Tests

Two drained direct shear tests were conducted on the lightweight aggregate. The tests were performed in accordance with ASTM D 3080 and run in a saturated condition. All direct shear points were performed in a twelve inch by twelve-inch square shear box. Normal stresses for the testing program were 0.25, 0.50, 1.0 and 2.0 kilograms per square centimeter (ksc).

For the first test set, the specimens were compacted using the impact method of compaction. The sample was compacted to approximately 45 pounds per cubic foot (pcf) or 95% of the maximum index density value. Each sample was compacted into the shear mold in three seperate layers. Once in the shear box the normal stress was applied and the specimen fully inundated.

Shearing of the specimen was begun following zero vertical deflection of the sample with the normal stress applied. A shearing rate of 0.05 centimeters per minute (cm/min) was used for all of the direct shear tests. During the course of the tests, horizontal load and displacement measurements were recorded. Upon test completion, final moisture contents were determined by collection of the entire sample including the free water from the shear box. Moisture content samples were later used for the "after test" particle size analysis.

Consolidated Drained Triaxial Shear Tests

Two consolidated drained triaxial tests were performed in accordance with Corps of Engineers procedure EM-1110-2-1906 Appendix X. Specimens for the triaxial compression tests were molded to dimensions of six inches in diameter and twelve inches in height. The test specimens, like the direct shear specimens, were molded using the same two methods of compaction, impact and vibratory. The specimens were molded using a total of five lifts as opposed to the three utilized in the direct shear tests. To avoid undue influence, porous stones were not utilized. Only filter paper disks were positioned between the material and platens to provide unimpeded flow to and from the specimen.

Specimen set up required that a split mold be used to facilitate the specimen molding. Once the specimen and been compacted within the latex membrane positioned inside the mold and attached to the top and bottom platens, a vacuum of 2 psi was applied to maintain the molded shape of the specimen while it was sealed into the triaxial chamber and saturating pressures applied.

Saturation of the specimen was accomplished by introducing de-aired water through the bottom platen and allowing the water to flow through the top of the specimen. When fully inundated, the sample was pressurized by applying 3.72 ksc confining pressure and 3.52 ksc backpressure incrementally. The specimens remained under saturating pressures overnight. The average saturation time was approximately nineteen hours. Because of the rigidity of the specimens, B parameters were not utilized for verifying the degree of saturation.

Consolidation of the specimen was accomplished by increasing the cell pressure to a difference with the backpressure equal to the desired effective consolidating pressure. For this project consolidating stresses of 0.25, 0.50, 1.0 and 2.0 ksc were used for both triaxial tests.

When consolidation of the specimen was complete, the specimen was vertically loaded until failure or until reaching fifteen percent vertical strain. Free drainage of the specimen was allowed throughout the test. A strain rate of 0.02 centimeters per minute was utilized for each test. During the course of shearing vertical load, deflection and volume change measurements were recorded.

Norlite Testing

In 1993 STS Consultants, Ltd. conducted a laboratory testing program of a lightweight aggregate provided by Norlite Corporation, then located in Acton Massachusetts. A ¾ inch expanded shale aggregate was utilized in that testing program. The expanded shale aggregate consisted predominately of angular and sub-angular particles.

For the testing program, STS performed particle size analyses, compaction testing and six-inch diameter drained triaxial tests. With the permission of Norlite, STS has included the data from the report, dated December 10,1993, in Appendix A. The data has been included to provide a comparison of the test results to the lightweight aggregate produced by Upcycle. Permission to utilize that test data in this report was provided by Mr. Frank S. Archambault of Norlite Corporation in a memo to STS dated June 14, 2001.

Testing Program Discussion

The maximum density values obtained on the Upcycle material from the two methods of compaction were 51.0 pcf obtained using the maximum index density test and 52.5 pcf using the standard Proctor compaction test. The two different methods resulted in a difference of only 1.5 pcf. This may be attributed to testing variation or to the slight break down of the material using the impact compaction method utilized in ASTM D 698.

The two direct shear test results were also very close. The vibratory method of compaction yielded a friction angle of 47.5 degrees while the test using the tamping method of compaction resulted in a 46.0 degree angle. Again the different compaction methods had little if any influence on the test results. Particle size analysis after testing indicated a small amount of particle break down.

Several factors influence the friction angle developed through the direct shear test. First the particle shape may allow the particles to interlock more readily. An angular or sub-angular particle shape would be more likely to provide higher shear resistance than a material comprised of mostly sub-rounded and rounded particles. The maximum particle size as well as the particle size distribution can also influence shear resistance. A silty sandy gravel that has a high percentage of interparticle space filled with fine material in most cases produces a friction angle lower than that of an open graded gravel sample. The shearing process may also contribute to the particle break down. Normal stresses also may affect friction angle development. As normal stresses increase, the friction angle has a tendency to decrease. This may be attributed to particle size break down in certain aggregates. Each material is unique concerning the normal stress and the resulting friction angle.

Project specifications are always unique to the specific project. It has been our experience that project specifications often require a minimum friction angle of 35 degrees for materials used for embankments or reinforced walls. If this minimum angle is specified, the Upcycle aggregate falls well beyond the 35-degree requirement. It should be noted that the previous testing of Norlite lightweight aggregate did not include direct shear testing.

The consolidated drained triaxial test results of the Upcycle aggregate were almost identical. A friction angle of 38.5 degrees was determined for the vibratory compacted specimens and 38.0 degrees for the tamped specimens. Any influence due to compaction methods was not apparent. Both specimens had little material degradation during the shearing process as was indicated by the particle size distribution curves.

When compared with the Norlite test results, the Upcycle samples fall between the two values determined for the Norlite program, those being 37.0 and 39.0 degrees. The expanded shale of the Norlite program resulted in deviatoric stresses slightly higher than those obtained for the Upcycle aggregate. The maximum deviator stress developed with the Norlite 2.0 ksc confining pressure was 8.03 ksc. The highest for the Upcycle program at the same confining stress was 7.39 ksc., approximately 8 percent lower. This may be attributed to the compressibility or compressive strength of the individual particles. In any event, the extruded lightweight aggregate produced by Upcycle appears to have similar strength characteristics when compared with the expanded shale material produced by Norlite.

Overall the test results indicate the Upcycle material to provide repeatable test results. Methods of compaction appear to have little, if any, influence; however, with the very open free draining structure of the material, it would appear that vibratory compaction methods would be more practical in field applications.

LABORATORY TEST REPORT

ON

UPCYCLE – NEWARK BAY AGGREGATE

BENEFICIAL REUSE OF DREDGED MATERIALS MATRIX EVALUATION TESTING PROGRAM

DECEMBER 2001

MATERIALS ENGINEERING DIVISION
ENGINEERING DEPARTMENT
THE PORT AUTHORITY OF NY AND NJ

TABLE OF CONTENTS

1. INTRODUCTION

1.1 Objective

1.2 Scope of Testing

1.3 General Visual Inspection

2. LABORATORY TESTING OF AGGREGATE AND RESULTS

2.1 ASTM C-136 : Sieve Analysis

2.2 ASTM D-1557 : Modified Proctor

2.3 ASTM C-29 : Bulk Density

2.4 ASTM C-127 : Specific Gravity SSD and Absorption

2.5 ASTM C-88 : Soundness of Aggregates

2.6 AASHTO T-103 : Freeze and Thaw of Aggregate

2.7 ASTM C-227 : Potential Alkali Reactivity of Cement-Aggregate Combinations

2.8 Concrete Mix Design and Test Results

2.9 Environmental Analysis of Aggregate

3. CONCLUSIONS AND RECOMMENDATIONS

4. APPENDIX

1. INTRODUCTION

1.1 OBJECTIVE

The purpose of this test program was to examine and test lightweight coarse aggregate produced by JCI/Upcycle from Newark Bay dredge sediment. The final product is required to contain no contaminants and must qualify as a useful aggregate for either Portland Cement concrete or as a fill material.

1.2 SCOPE OF TESTING

The aggregate, concrete mix design, and concrete testing were performed at the Port Authority Materials Engineering Laboratory. Environmental testing for contaminants in the aggregate were performed by Hampton-Clarke/Veritech Labs with the results evaluated by the Port Authority Chemical and Environmental Laboratory. The test methods and the test results on the Upcycle aggregate are detailed in Sections 2 and 4 of this report.

The Upcycle-Newark Bay aggregate was tested in the same manner as the Upcycle-Raritan Bay aggregate testing program performed in 1998-1999, which included testing Norlite as a control sample. The test results from the earlier program are used in this report for comparison to our current sample.

1.3 GENERAL VISUAL INSPECTION

Upcycle aggregate is produced by JCI/Upcycle Aggregates, LLC by using dredge from Newark Bay. The aggregates are extruded pellets of approximately ½ inch diameter and one inch in length. A percentage of the pellets are crushed in order to achieve the lightweight aggregate gradation designation of ¾ to #4. The surface of each aggregate is reddish brown in color and has numerous radial, interconnected cracks. The interior of the aggregate is a dark brown to black color and porous in nature.

The Newark Bay aggregate is highly comparable in size, shape, and color to the Perth Amboy Marina material tested previously. The control test aggregate, Norlite, is commonly used in the construction industry for fill applications as well as in making concrete. It is gray in color, somewhat angular in shape, and porous in nature.

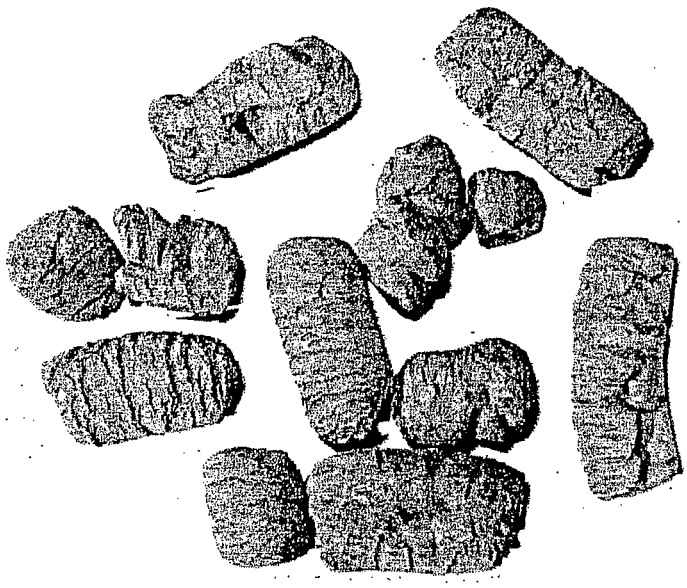

2. LABORATORY TESTING OF AGGREGATE AND RESULTS

2.1 ASTM C-136 : SIEVE ANALYSIS

Sieve analysis was performed on portions of the aggregates in two different conditions. The first is in the initial "as received" condition. The second sieve analysis was done on portion of sample used after the proctor test called the "breakdown" (see Appendix A for complete Soils Laboratory report).

PERCENT PASSING (As Received)

	Sieve Size									
Aggregate	3/4"	1/2"	3/8"	# 4	#8	#16	# 30	# 50	# 100	# 200
Upcycle										
Newark Bay	99.7	24.9	22.1	10.9	8.6	7.2	5.5	4.0	2.8	1.9
Perth Amboy	100	36.3	28.3	13.3	8.4	6.3	4.4	3.1	2.0	1.2
Norlite	97.4	42.1	18.0	5.4	—	—	—	—	—	—
ASTM*	**90-100**	—	**10-50**	**0-15**	—	—	—	—	—	—

* ASTM C-330 Table 1, Size Designation ¾" to #4

PERCENT PASSING (After Compaction)

	Sieve Size									
Aggregate	3/4"	1/2"	3/8"	# 4	#8	#16	# 30	# 50	# 100	# 200
Upcycle										
Newark Bay	100	58.9	50.0	33.9	24.2	17.6	12.3	8.7	5.9	3.6
Perth Amboy	100	66.9	51.5	32.9	21.8	15.4	11.0	8.4	6.5	4.7
Norlite	100	83.7	66.4	36.9	25.5	17.7	11.9	8.2	5.9	3.9
ASTM*	**90-100**	—	**10-50**	**0-15**	—	—	—	—	—	—

*ASTM C-330 Table 1, Size Designation ¾" to No. 4

2.2 ASTM D-1557 : MODIFIED PROCTOR

A modified proctor test was performed on each of the Upcycle aggregates. The **Upcycle-Newark Bay** material has a **maximum dry density of 62.4 pcf** at an **optimum moisture of 8.1%.** The **Upcycle-Perth Amboy** material has a **maximum dry density of 68.9 pcf** at an **optimum moisture of 20.0%.**

2.3 ASTM C-29 : BULK DENSITY

The bulk density ("unit weight") was tested in accordance with ASTM C-29 using the method prescribed in ASTM C-330 section 8.8.

AGGREGATE	UNIT WT. (lb./cu.ft.)
Upcycle-Newark Bay	46
Upcycle-Perth Amboy	54
Norlite	45

2.4 ASTM C-127 : SPECIFIC GRAVITY SSD AND ABSORPTION

The Specific Gravity SSD and Absorption were determined after immersion of the aggregates in water at standard conditions and following standard procedures.

AGGREGATE	SPECIFIC GRAVITY SSD	ABSORPTION %
Upcycle-Newark Bay	1.22	14.7
Upcycle-Perth Amboy	1.34	12.8
Norlite	1.25	11.3

2.5 ASTM C-88 : SOUNDNESS OF AGGREGATES

This test provides an indication of how an aggregate will hold up when subjected to weathering action in concrete. The aggregates were each subjected to five soaking and drying cycles using Sodium Sulfate.

Aggregate	Sieve	Original Grading (%)	Initial Wt. of Fraction (g)	Final Wt. of Fraction (g)	Percentage Passing Sieve After Test	Weighted Percentage Loss
Upcycle	1/2 in.	75	300.24	297.74	0.8	0.38
Newark Bay	3/8 in.	3	----	----	1.1	0.03
	# 4	11	670.60	662.94	1.1	0.12
					Total Weighted Loss	.5 %
Upcycle	1/2 in.	81	679.96	679.96	1.05	0.85
Perth Amboy	3/8 in.	6	330.31	330.31	2.6	0.16
	# 4	6	302.50	302.50	4.66	0.28
					Total Weighted Loss	1.3 %
Norlite	1/2 in.	62	670.11	670.11	2.53	1.57
	3/8 in.	30	331.29	331.29	5.19	1.56
	# 4	6	305.88	305.88	1.09	0.07
					Total Weighted Loss	3.2 %

2.6 AASHTO T-103 : FREEZE AND THAW OF AGGREGATE

The aggregate was tested in accordance with AASHTO T-103, Procedure A for ten freeze/thaw cycles.

Aggregate	Sieve	Original Grading (%)	Initial Wt. of Fraction (g)	Final Wt. of Fraction (g)	Percentage Passing Sieve After Test	Weighted Percentage Loss
Upcycle	1/2 in.	75	300.0	299.7	0.0	0.00
Newark Bay	3/8 in.	3	—	—	0.02	0.00
	# 4	11	999.1	997.2	0.02	0.00
					Total Weighted Loss	0.0 %
Upcycle	1/2 in.	81	670.11	665.27	0.72	0.59
Perth Amboy	3/8 in.	6	290.02	288.26	0.61	0.04
	# 4	6	298.00	294.70	1.11	0.07
					Total Weighted Loss	0.7 %
Norlite	1/2 in.	62	685.39	665.46	2.91	1.80
	3/8 in.	30	331.95	319.70	3.69	1.11
	# 4	6	281.84	274.93	2.45	0.15
					Total Weighted Loss	3.1 %

2.7 ASTM C-227 : POTENTIAL ALKALI REACTIVITY OF CEMENT-AGGREGATE COMBINATIONS

The test was performed by making 1"x 1" mortar bars consisting of Upcycle aggregate graded as per ASTM and Essroc I cement. The Essroc I cement was chosen for its higher alkali content (.95 Na_2O). The **average expansion** of the bars at was **.005 % at 14 days.**

2.8 CONCRETE MIX DESIGN AND TEST RESULTS

The following charts show the mix designs used for the Upcycle-Newark Bay testing program and the earlier Upcycle-Perth Amboy (1999), as well as the fresh and hardened concrete test results.

MIX DESIGN - 1999 UPCYCLE/NORLITE				
	Material Source	S.G.	Weight	Volume (cu. ft.)
Cement	Hercules I/II	3.15	658 lb.	3.35
Fine Agg.	Perth Amboy	2.65	1248 lb.	7.70
Coarse Agg.	Upcycle or Norlite	*	**	9.31
Water	Potable	1.00	335 lb.	5.13
Air Entr.	Daravair	1.05	8 oz.	—
Water Red.	WRDA - Hycol	1.20	19 oz.	—
W/C Ratio 0.51	Air 5.2%		Unit Wt. 114.0 lb/cu ft	
* Specific Gravity: Norlite = 1.25, Upcycle = 1.34				
** Coarse Aggregate weight was adjusted for 9.31cu ft volume				

MIX DESIGN - UPCYCLE, NEWARK BAY				
	Material Source	S.G.	Weight	Volume (cu. ft.)
Cement	Blue Circle I/II	3.15	658 lb.	3.35
Fine Agg.	Clayton	2.60	1250 lb.	7.70
Coarse Agg.	Upcycle, Nwk	1.22	700 lb.	9.20
Water	Potable	1.00	320 lb.	5.13
Air Entr.	Daravair	1.05	5.5 oz.	—
W/C Ratio 0.49	Air 6.0%		Unit Wt. 108.4 lb/cu ft	

MIX PROPERTIES - PLASTIC CONCRETE				
	Slump	Air Cont.	Unit Weight	Temp.
Upcycle, Perth Amboy	6.75"	5.25%	117.1 lb/cu ft	71
Norlite	5.25"	5.50%	117.4 lb/cu ft	70
Upcycle, Newark Bay	6.50"	7.25%	112.5 lb/cu ft	71

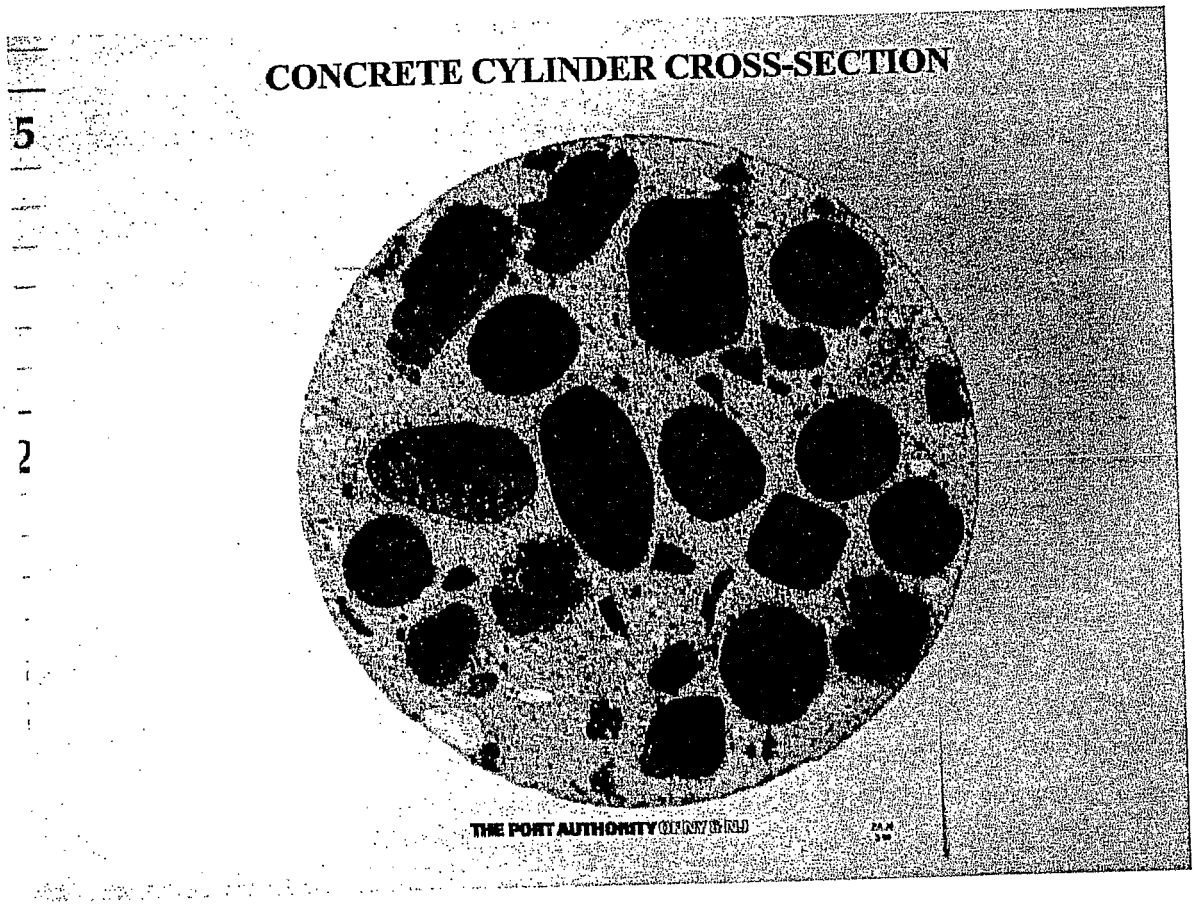

MIX PROPERTIES - HARDENED CONCRETE				
	Compressive Strength		Flexural Strength	Shrinkage (ASTM C-157)
	7 Day	28 Day		
Upcycle, Perth Amboy	3880 psi	5150 psi	695 psi	0.045%
Norlite	3960 psi	4780 psi	692 psi	0.039%
Upcycle, Newark Bay	3260 psi	4470 psi	647 psi	0.036%

2.9 ENVIRONMENTAL ANALYSIS OF AGGREGATE

The Upcycle-Newark Bay aggregate was submitted for a toxicity analysis including Dioxin, Cyanide, Mercury, Pesticides/PCB's, Semi-Volatile Organics, volatile compounds, and heavy metals. The report was reviewed and summarized by Dorian Bailey, PANYNJ Chemical/Environmental Testing Laboratory Supervisor, stating that from an exposure stand-point, based on the data obtained, **the material may be viewed as non-toxic** (see Appendix B for complete Environmental report).

3. CONCLUSIONS AND RECOMMENDATIONS

3.1 CONCLUSIONS

The principal conclusion drawn from the laboratory testing program is that the Upcycle aggregate exibits physical characteristics desired for a construction grade lightweight aggregate. The following is the list of conclusions derived from the testing program.

- The particle size distribution of Upcycle aggregate is generally uniform and can be manufactured to meet conventional specifications for lightweight concrete.
- The Upcycle aggregate is in the same density range as common lightweight aggregate such as Norlite.
- Water absorption of the Upcycle is in the same range as Norlite.
- The Soundness and Freeze-Thaw tests on the aggregates have demonstrated that the durability and soundness of Upcycle aggregate is equal to or better than Norlite aggregate.
- Degradation (Breakdown of the particles) due to compaction is less in Upcycle than Norlite.
- The Upcycle-Newark Bay does not have ASR potential.
- The successful batching of concrete using Upcycle aggregate demonstrates that Upcycle aggregate can be incorporated in Portland Cement Concrete in the same manner as a typical lightweight coarse aggregate like Norlite. The acceptable test results on the fresh and hardened, cured Upcycle concrete specimens are consistent with that of the Norlite specimens. This is further evidence that the Upcycle material can be used as a viable lightweight coarse aggregate for concrete.
- The material passes environmental testing and is considered non-toxic.

3.2 RECOMMENDATIONS

After reviewing the program, the test results are consistent with lightweight aggregates currently in use. It is recommended by the Materials Engineering Department that field testing of the Upcycle lightweight coarse aggregate be conducted to further evaluate its usefulness as lightweight structural backfill and as lightweight aggregate in Portland Cement concrete. A successful field installation utilizing the aggregate will contribute to broader acceptance of this material and provide valuable construction experience as well as in-place test data for continuing evaluation.

4. APPENDIX

A. SOILS LABORATORY REPORT

B. ENVIRONMENTAL REPORT

SOILS LABORATORY REPORT

GRAIN SIZE DISTRIBUTION TEST DATA Test No.: 14

Date: August 7, 2001
Project No.: Lab File
Project: Upcycle

Sample Data

Location of Sample: Before Compaction
Sample Description:
USCS Class: Liquid limit:
AASHTO Class: Plasticity index:

Notes

Remarks: Tested by: J. Zarks
Reviewed by:
Fig. No.:

Mechanical Analysis Data

Sieve	Size, mm	Percent finer
1 inches	25.40	100.0
0.75 inches	19.05	99.7
0.5 inches	12.70	24.9
0.375 inches	9.53	22.1
# 4	4.750	10.9
# 8	2.360	8.6
# 16	1.180	7.2
# 30	0.600	5.5
# 50	0.300	4.0
# 100	0.150	2.8
# 200	0.075	1.9

Fractional Components

Gravel/Sand based on #10 sieve
Sand/Fines based on #200 sieve
% + 3 in. = 0.0 % GRAVEL = 91.7 % SAND = 6.4
% FINES = 1.9

D85= 17.58 D60= 15.346 D50= 14.538
D30= 13.0467 D15= 6.10239 D10= 3.59335
Cc = 3.0867 Cu = 4.2707

GRAIN SIZE DISTRIBUTION TEST DATA Test No.: 15

Date: August 7, 2001
Project No.: Lab File
Project: Upcycle

Sample Data

Location of Sample: After Compaction
Sample Description:
USCS Class: Liquid limit:
AASHTO Class: Plasticity index:

Notes

Remarks: Tested by: J. Zarks
Reviewed by:
Fig. No.:

Mechanical Analysis Data

Sieve	Size, mm	Percent finer
0.75 inches	19.05	100.0
0.5 inches	12.70	58.9
0.375 inches	9.53	50.0
# 4	4.750	33.9
# 8	2.360	24.2
# 16	1.180	17.6
# 30	0.600	12.3
# 50	0.300	8.7
# 100	0.150	5.9
# 200	0.075	3.6

Fractional Components

Gravel/Sand based on #10 sieve
Sand/Fines based on #200 sieve
% + 3 in. = 0.0 % GRAVEL = 77.5 % SAND = 18.9
% FINES = 3.6

D85= 16.81 D60= 12.897 D50= 9.451
D30= 3.8063 D15= 0.86199 D10= 0.39400
Cc = 2.8510 Cu = 32.7341

GRAIN SIZE DISTRIBUTION TEST REPORT

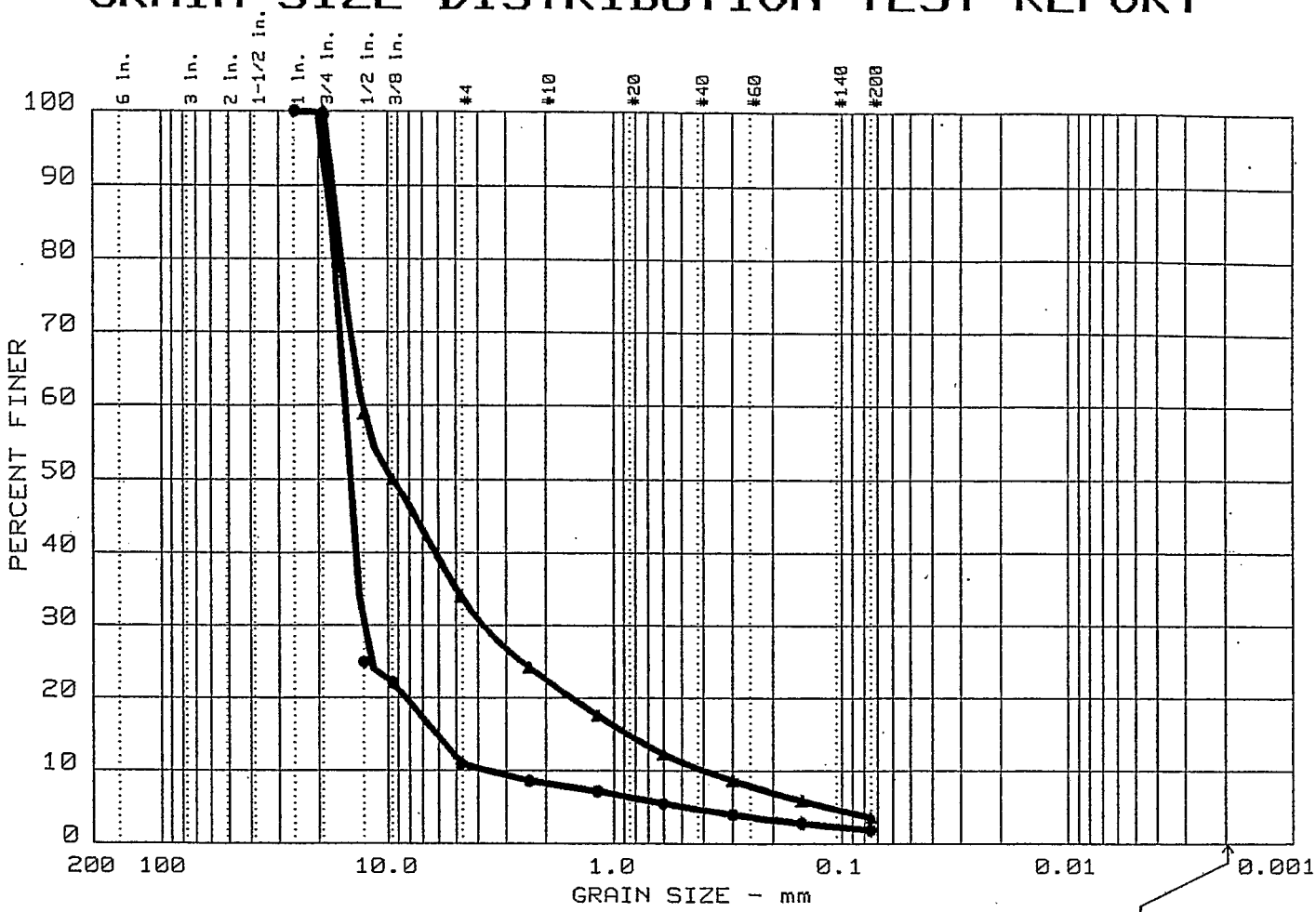

	% +3"	% GRAVEL	% SAND	% SILT	% CLAY
●	0.0	91.7	6.4	1.9	
▲	0.0	77.5	18.9	3.6	

	LL	PI	D_{85}	D_{60}	D_{50}	D_{30}	D_{15}	D_{10}	C_c	C_u
●			17.58	15.35	14.54	13.047	6.1024	3.5934	3.09	4.3
▲			16.81	12.90	9.45	3.806	0.8620	0.3940	2.85	32.7

	MATERIAL DESCRIPTION	USCS	AASHTO
●			
▲			

Project No.: Lab File
Project: Upcycle
● Location: Before Compaction
▲ Location: After Compaction

Date: August 7, 2001

Remarks:

Tested by: J. Zarks

Reviewed by:

GRAIN SIZE DISTRIBUTION TEST REPORT

THE PORT AUTHORITY OF N.Y. & N.J.

Figure No. _____

MOISTURE DENSITY TEST DATA

Client:
Project: Upcycle
Project Number:

Specimen Data

Source: Upcycle
Sample No.: 7/18/01
Elev. or Depth: Sample Length (in./cm.):
Location:
Description:
Liquid Limit: Plasticity Index: Natural Moisture:
Date: 8/3/01 USCS Classification: AASHTO Classification:
Testing Remarks:
Percent retained on 3/4 in. sieve:
Percent passing No. 200 sieve: Specific gravity:

Test Data And Results

Type of test: ASTM D 1557-91 Procedure C Modified
Mold Dia.: 6.00 in. Hammer Wt.: 10 lb. Drop: 18 in.
Layers: five Blows per Layer: 56

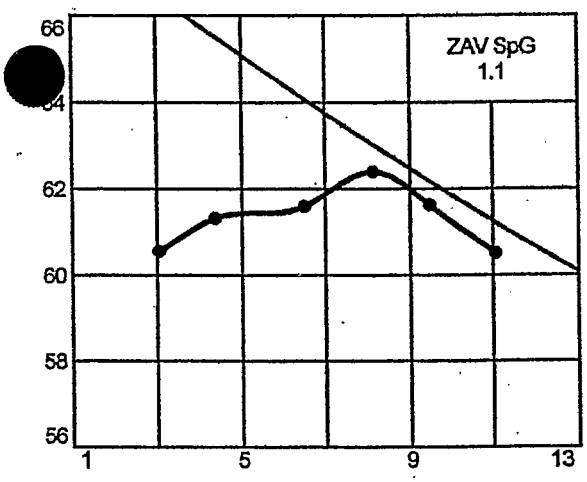

POINT NO.	1	2	3	4	5	6
WM + WS	19.06	19.18	19.44	19.42	19.30	19.44
WM	14.38	14.38	14.38	14.38	14.38	14.38
WW+T	6.34	6.40	5.74	5.58	6.38	6.44
WD+T	6.20	6.20	5.36	5.08	6.08	6.00
TARE	1.62	1.62	0.68	0.56	1.46	1.36
MOIST	3.1	4.4	8.1	11.1	6.5	9.5
MOISTURE	3.1	4.4	8.1	11.1	6.5	9.5
DRY DEN	60.5	61.3	62.4	60.5	61.6	61.6

Max dry den= 62.4 pcf Opt moisture= 8.1 %

Oversize Correction Not Applied

ENVIRONMENTAL ANALYSIS

CT #: PH-0671
MA #: NJ306
NJ #: 14622
NY #: 11408
PA #: 68-463

Report Of Analysis
veritech laboratories

To: PORT AUTHORITY OF NY & NJ
MATERIALS ENGINEERING DIV.
241 ERIE ST.
ROOM 234
JERSEY CITY NJ 07310-1397

Attention: Dorian Bailey
Project: Newark Bay

Date Collected: 8/1/01
Date Submitted: 8/9/01
Date Reported: 8/16/01

Lab#: AB39668 SampleID: Upcycle

TestGroup	Analyte	Units	MDL/PQL/RL	Result
AB39668 Upcycle				
% Solids SM2540G				
	% Solids	Percent		99
2,3,7,8-TCDD Scan				
	2,3,7,8-TCDD (1613)			Attached
Cyanide (soil/waste)				
	Cyanide	mg/kg	0.25	ND
Mercury (soil/waste) 7471A				
	Mercury	mg/Kg	0.14	ND
Organochlorine Pesticides 8081				
	;DCB-Surrogate	mg/Kg		83
	;TCMX-Surrogate	mg/Kg		71
	Aldrin	mg/Kg	0.0034	ND
	Alpha BHC	mg/Kg	0.0034	ND
	Beta-BHC	mg/Kg	0.0034	ND
	Chlordane	mg/Kg	0.0067	ND
	Delta-BHC	mg/Kg	0.0034	ND
	Dieldrin	mg/Kg	0.0034	ND
	Endosulfan I	mg/Kg	0.0034	ND
	Endosulfan II	mg/Kg	0.0034	ND
	Endosulfan Sulfate	mg/Kg	0.0034	ND
	Endrin	mg/Kg	0.0034	ND
	Endrin Aldehyde	mg/Kg	0.0034	ND
	Endrin Ketone	mg/Kg	0.0034	ND
	Gamma-BHC	mg/Kg	0.0034	ND
	Heptachlor	mg/Kg	0.0034	ND
	Heptachlor Epoxide	mg/Kg	0.0034	ND
	Methoxychlor	mg/Kg	0.0034	ND
	P,P'-DDD	mg/Kg	0.0034	ND
	P,P'-DDE	mg/Kg	0.0034	ND
	P,P'-DDT	mg/Kg	0.0034	ND
	Toxaphene	mg/Kg	0.034	ND

ND = Not Detected

Lab#: AB39668 SampleID: Upcycle

TestGroup	Analyte	Units	MDL/PQL/RL	Result
PCB 8082				
	;DCB-Surrogate	mg/Kg		84
	;TCMX-Surrogate	mg/Kg		92
	Aroclor-1016	mg/Kg	0.017	ND
	Aroclor-1221	mg/Kg	0.017	ND
	Aroclor-1232	mg/Kg	0.017	ND
	Aroclor-1242	mg/Kg	0.017	ND
	Aroclor-1248	mg/Kg	0.017	ND
	Aroclor-1254	mg/Kg	0.017	ND
	Aroclor-1260	mg/Kg	0.017	ND

DRAFT

ND = Not Detected

Lab# AB39668 SampleID: Upcycle

TestGroup	Analyte	Units	MDL/PQL/RL	Result
Semivolatile Organics + 25 (8270)				
	:2-Pentanone, 4-hydroxy-4-methyl-	mg/Kg	1.46	47J
	:9-Octadecenamide, (Z)-	mg/Kg	12.42	0.16J
	:Dodecanamide	mg/Kg	14.18	0.71J
TIC's	:unknown	mg/Kg	1.22	1.6J
	:unknown	mg/Kg	2.25	1.7J
	:unknown	mg/Kg	1.84	0.24J
	;2,4,6-Tribromophenol	mg/Kg		83
	;2-Fluorobiphenyl	mg/Kg		94
	;2-Fluorophenol	mg/Kg		81
	;Nitrobenzene-d5	mg/Kg		80
	;Phenol-d5	mg/Kg		81
	;Terphenyl-d14	mg/Kg		85
	1,2,4-Trichlorobenzene	mg/Kg	0.34	ND
	1,2-Dichlorobenzene	mg/Kg	0.34	ND
	1,2-Diphenylhydrazine	mg/Kg	0.34	ND
	1,3-Dichlorobenzene	mg/Kg	0.34	ND
	1,4-Dichlorobenzene	mg/Kg	0.34	ND
	2,4,5-Trichlorophenol	mg/Kg	0.34	ND
	2,4,6-Trichlorophenol	mg/Kg	0.34	ND
	2,4-Dichlorophenol	mg/Kg	0.34	ND
	2,4-Dimethylphenol	mg/Kg	0.34	ND
	2,4-Dinitrophenol	mg/Kg	0.34	ND
	2,4-Dinitrotoluene	mg/Kg	0.34	ND
	2,6-Dinitrotoluene	mg/Kg	0.34	ND
	2-Chloronaphthalene	mg/Kg	0.34	ND
	2-Chlorophenol	mg/Kg	0.34	ND
	2-Methylnaphthalene	mg/Kg	0.34	ND
	2-Methylphenol	mg/Kg	0.34	ND
	2-Nitroaniline	mg/Kg	0.34	ND
	2-Nitrophenol	mg/Kg	0.34	ND
	3&4-Methylphenol	mg/Kg	0.34	ND
	3,3'-Dichlorobenzidine	mg/Kg	0.34	ND
	3-Nitroaniline	mg/Kg	0.34	ND
	4,6-Dinitro-2-methylphenol	mg/Kg	0.34	ND
	4-Bromophenyl-phenylether	mg/Kg	0.34	ND
	4-Chloro-3-methylphenol	mg/Kg	0.34	ND
	4-Chloroaniline	mg/Kg	0.34	ND
	4-Chlorophenyl-phenylether	mg/Kg	0.34	ND
	4-Nitroaniline	mg/Kg	0.34	ND
	4-Nitrophenol	mg/Kg	0.34	ND
	Acenaphthene	mg/Kg	0.34	ND
	Acenaphthylene	mg/Kg	0.34	ND
	Anthracene	mg/Kg	0.34	ND
	Benzidine	mg/Kg	0.67	ND
	Benzo[a]anthracene	mg/Kg	0.34	ND

ND = Not Detected

Lab#: AB39668 SampleID: Upcycle

TestGroup	Analyte	Units	MDL/PQL/RL	Result
	Benzo[a]pyrene	mg/Kg	0.34	ND
	Benzo[b]fluoranthene	mg/Kg	0.34	ND
	Benzo[g,h,i]perylene	mg/Kg	0.34	ND
	Benzo[k]fluoranthene	mg/Kg	0.34	ND
	Bis(2-Chloroethoxy)methane	mg/Kg	0.34	ND
	Bis(2-Chloroethyl)Ether	mg/Kg	0.34	ND
	Bis(2-Chloroisopropyl)ether	mg/Kg	0.34	ND
	Bis(2-Ethylhexyl)phthalate	mg/Kg	0.34	ND
	Butylbenzylphthalate	mg/Kg	0.34	ND
	Carbazole	mg/Kg	0.34	ND
	Chrysene	mg/Kg	0.34	ND
	Dibenzo[a,h]Anthracene	mg/Kg	0.34	ND
	Dibenzofuran	mg/Kg	0.34	ND
	Diethylphthalate	mg/Kg	0.34	ND
	Dimethylphthalate	mg/Kg	0.34	ND
	Di-n-butylphthalate	mg/Kg	0.34	ND
	Di-n-octylphthalate	mg/Kg	0.34	ND
	Fluoranthene	mg/Kg	0.34	ND
	Fluorene	mg/Kg	0.34	ND
	Hexachlorobenzene	mg/Kg	0.34	ND
	Hexachlorobutadiene	mg/Kg	0.34	ND
	Hexachlorocyclopentadiene	mg/Kg	0.67	ND
	Hexachloroethane	mg/Kg	0.34	ND
	Indeno[1,2,3-cd]pyrene	mg/Kg	0.34	ND
	Isophorone	mg/Kg	0.34	ND
	Naphthalene	mg/Kg	0.34	ND
	Nitrobenzene	mg/Kg	0.34	ND
	N-Nitrosodimethylamine	mg/Kg	0.34	ND
	N-Nitroso-Di-N-Propylamine	mg/Kg	0.34	ND
	N-Nitrosodiphenylamine	mg/Kg	0.34	ND
	Pentachlorophenol	mg/Kg	0.34	ND
	Phenanthrene	mg/Kg	0.34	ND
	Phenol	mg/Kg	0.34	ND
	Pyrene	mg/Kg	0.34	ND

DRAFT

ND = Not Detected

Lab#: AB39668 SampleID: Upcycle

TestGroup	Analyte	Units	MDL/PQL/RL	Result
TAL Metals (Soil) 6010				
	Aluminum	Mg/Kg	300	3200
	Antimony	Mg/Kg	2	ND
	Arsenic	Mg/Kg	2	4.7
	Barium	Mg/Kg	10	21
	Beryllium	Mg/Kg	0.61	ND
	Cadmium	Mg/Kg	0.61	ND
	Calcium	Mg/Kg	510	3900
	Chromium	Mg/Kg	5.1	7.7
	Cobalt	Mg/Kg	2.5	ND
	Copper	Mg/Kg	5.1	11
	Iron	Mg/Kg	300	2400
	Lead	Mg/Kg	5.1	ND
	Magnesium	Mg/Kg	510	750
	Manganese	Mg/Kg	16	40
	Nickel	Mg/Kg	5.1	ND
	Potassium	Mg/Kg	250	260
	Selenium	Mg/Kg	2	ND
	Silver	Mg/Kg	2.5	ND
	Sodium	Mg/Kg	510	ND
	Thallium	Mg/Kg	1.2	ND
	Vanadium	Mg/Kg	10	ND
	Zinc	Mg/Kg	10	11

ND = Not Detected

Lab#: AB39668 SampleID: Upcycle

TestGroup	Analyte	Units	MDL/PQL/RL	Result
Volatile Organics + 10 (8260)				
TIC	:Ethane, 1,1,2-trichloro-1,2,2-trifluoro	mg/Kg	3.88	0.0058J
	;1,2-Dichloroethane-d4	mg/Kg		96
	;Bromofluorobenzene	mg/Kg		102
	;Toluene-d8	mg/Kg		95
	1,1,1-Trichloroethane	mg/Kg	0.0051	ND
	1,1,2,2-Tetrachloroethane	mg/Kg	0.0051	ND
	1,1,2-Trichloroethane	mg/Kg	0.0051	ND
	1,1-Dichloroethane	mg/Kg	0.0051	ND
	1,1-Dichloroethene	mg/Kg	0.0051	ND
	1,2-Dichloroethane	mg/Kg	0.0051	ND
	1,2-Dichloropropane	mg/Kg	0.0051	ND
	2-Butanone	mg/Kg	0.025	ND
	2-Chloroethylvinylether	mg/Kg	0.0051	ND
	2-Hexanone	mg/Kg	0.020	ND
	4-Methyl-2-Pentanone	mg/Kg	0.020	ND
	Acetone	mg/Kg	0.020	ND
	Acrolein	mg/Kg	0.015	ND
	Acrylonitrile	mg/Kg	0.0070	ND
	Benzene	mg/Kg	0.0010	ND
	Bromodichloromethane	mg/Kg	0.0051	ND
	Bromoform	mg/Kg	0.0051	ND
	Bromomethane	mg/Kg	0.0051	ND
	Carbon disulfide	mg/Kg	0.0051	ND
	Carbon tetrachloride	mg/Kg	0.0051	ND
	Chlorobenzene	mg/Kg	0.0051	ND
	Chloroethane	mg/Kg	0.0051	ND
	Chloroform	mg/Kg	0.0051	ND
	Chloromethane	mg/Kg	0.0051	ND
	Cis-1,2-Dichloroethene	mg/Kg	0.0051	ND
	Cis-1,3-Dichloropropene	mg/Kg	0.0051	ND
	Dibromochloromethane	mg/Kg	0.0051	ND
	Ethylbenzene	mg/Kg	0.0010	ND
	M&p-Xylenes	mg/Kg	0.0020	ND
	Methylene chloride	mg/Kg	0.0051	0.011B
	O-Xylene	mg/Kg	0.0010	ND
	Styrene	mg/Kg	0.0010	ND
	Tetrachloroethene	mg/Kg	0.0051	ND
	Toluene	mg/Kg	0.0010	ND
	Trans-1,2-Dichloroethene	mg/Kg	0.0051	ND
	Trans-1,3-Dichloropropene	mg/Kg	0.0051	ND
	Trichloroethene	mg/Kg	0.0051	ND
	Vinyl chloride	mg/Kg	0.0051	ND

ND = Not Detected

Lab# AB39668 SampleID: Upcycle

TestGroup	Analyte	Units	MDL/PQL/RL	Result

This report is a true report of results obtained from our tests of this material. In lieu of a formal contract document, the total aggregate liability of Veritech to all parties shall not exceed Veritech's total fee for analytical services rendered.

Robin Jetter - Quality Assurance Director

Or

Stanley Gilewicz - Laboratory Director

ND = Not Detected

PASC - Certificate of Analysis

Client ID:		Method Blank	Blank Spike	Blank Spike	AB39668 UPCYCLE
Lab No.:		045744 01	045744 01	045744 01	045745 01
Date Sampled:		-	-	-	01-Aug-2001
Component	Units			% Recoveries	
2,3,7,8-TCDD	ng/g	<	2.5	100	<0.0050
Internal Recoveries	%				
2,3,7,8-TCDD-13C12		99	101	101	90

NEW YORK STATE
DEPARTMENT OF TRANSPORTATION
MATERIALS BUREAU

SOURCE # 10- 1L TEST # 01AL 1
J.C.I./UPCYCLE BR3a SERIAL # 183125

On 06/29/01 material represented by sample 183125 was TESTED FOR INFORMATION ONLY.

REMARKS: UNIT WEIGHT AVG.=45.47LBS/FT3. CRUSHED & UNCRUSHED SAMPLES TESTED - SEE TEST SHEET FOR DETAILS.

YSDOT SIZES	NO.2	NO.1	NO.1A
10 Cycle MgSO4	1.7	3.5	
25 Cycle freeze-thaw			
25 Cycle 3% freeze-thaw			
% Non-carbonate	100		
% Insoluble residue			
L.A. Abrasion Grading B	31.1		

Bulk Specific Gravity SSD	1.42	Gravity & absorption values represent
Bulk Specific Gravity	1.244	this sample only
Apparent Specific Gravity	1.517	They may not be appropriate
Absorption	14.5	for designing mixes

OMPOSITION (size 2)	%
LIGHTWEIGHT AGGREGATE	100

NEW YORK STATE DEPARTMENT OF TRANSPORTATION
MATERIALS BUREAU

COARSE AGGREGATE ANALYSIS

TEST No.: 01AL 01
BR# 183125

DATE REC'D: 04/06/01
SOURCE No.: 10- 1L

LA Abrasion GRADING B
ORIGINAL WT 5007
FINAL WT 3449
% 31.1

25 CYCLE FREEZE-THAW
SIZE 3/4" 1/2"

NYSDOT SIZE No. 2's

COMPOSITION	%	
Extended Ht wt. unbroken	96	uncru
broken	4	
Extended Ht wt. broken	70	crush
unbroken	30	

% NON-CARBONATE 100

SPECIFIC GRAVITY & ABSORPTION TESTS

A	B	C	BULK SSD	BULK	APPARENT	ABSORPTION
1988	2276	677.9	1.42	1.244	1.517	14.5 crushed
2024	2274	600.1	1.36	1.209	1.421	12.4 uncrushed

10 CYCLE MgSO4 TANK: 1 FINISH DATE: 05/11/01 25 CYCLE 3% FREEZE-THAW

SIZE No.	3	2	1	1A	
ORIGINAL WT	0	2473	1094	0	crushed
FINAL WT	0	2431	1056	0	
% LOSS		1.7	3.5		
ORIGINAL WT	0	2504	0	0	uncrushed
FINAL WT	0	2485	0	0	
% LOSS		0.8			

SIZE 3/4" 1/2"

% LOSS
TOTAL % LOSS

TESTED BY: [signature]

CHECKED BY: [signature]

REVIEWED BY: M.C. Pangburn

DATE: 6-20-01

THIS MATERIAL WILL BE DISCARDED ON: 7-20-01

REMARKS: Unit wgt ave. = 45.47 lbs./ft^3

Clay lumps + friables = crushed = 0.4% uncrushed 0.0%

Form LB-9

New Jersey Department of Transportation
Division of Materials

Report analysis
Coarse Aggregate
Serial # 843200

Charged to: Fuller Co.

Proposed Use: info only

Kind of Material: light weight

Size: *57

Producer: 1) For Approval

Location: Bayonne, NJ

Sample taken from	delivered sample
Quantity represented	25 tons
Marks on sample	PAH#001
Sampled by	Paul I. Hang
Date taken	05/11/01
Date received at lab	11
Seal number	
Laboratory serial #	843200

Reported to:

~~1) For Approval~~
JC1/Upcycle Asso.
PO Box 11389
Albany, NY 1221
ATT: Jay Derman

Size of opening Square AASHTO T27	Total % Passing	Required % MIN.	Required % MAX.
100mm (4")			
90 mm (3.5")			
75mm (3")			
63 mm (2.5")			
50mm (2")			
37.5mm (1.5")	100	100	
25mm (1")	100	95	100
19mm (3/4")			
12.5mm (1/2")	43	25	60
9.5mm (3/8")			
4.75mm (No. 4)	23	0	10
2.36mm (No. 8)	18	0	5
1.18mm (No. 16)			
600mm (No. 30)			
300 µm (No. 50)			
150 µm (No. 100)			
75µm (No. 200)			
PLASTICITY INDEX AASHTO T90			
ABSORPTION AASHTO T85			
SODIUM SULFATE NJDOT A-3	1.6		10
LOS ANGELES ABRASION AASHTO T96	31		40

Sp. Grav. Bulk: SSD: 1.35 App.:

AASHTO T19 Unit Wt: 49 Dry Rodded Wt.: 53 Voids: 42 (%)

Reflectance NJDOT A-2: Scratch NJDOT A-9: 0 Flat/Elongate CRDC-119: (7% Max.)

NJDOT A-6 Coating: NA Fines - Ad. Fines -

NJDOT A-5 Lithologic Analysis: Acceptable - Other - (5% Max.)

Carbonate - Weathered - (5% Max.); Crushed Count -

PCC - (90% Min.) Bit. Con. - (10% Max.) Brick/Friable - (4% Max.)

Wood - (0.1% Max.) Glass: Plastic: Paper: Metal:

Warren Cummings

REMARKS:

Fe spec is 1.5 mg/200 gm sample .30, .31/2 gms, (60,000 mg/200 gm sample)
LOI spec. is 5% max - 0

Info only.

Paul I. Hang