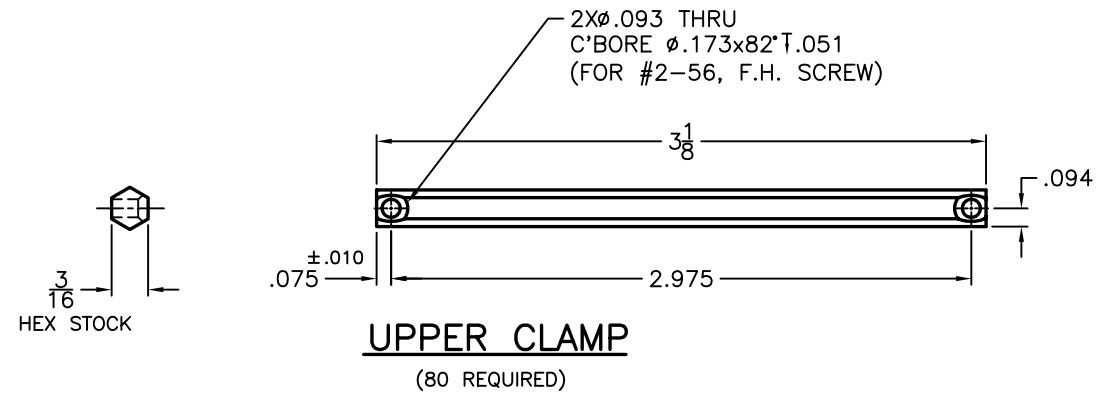

UPPER CLAMP

(80 REQUIRED)

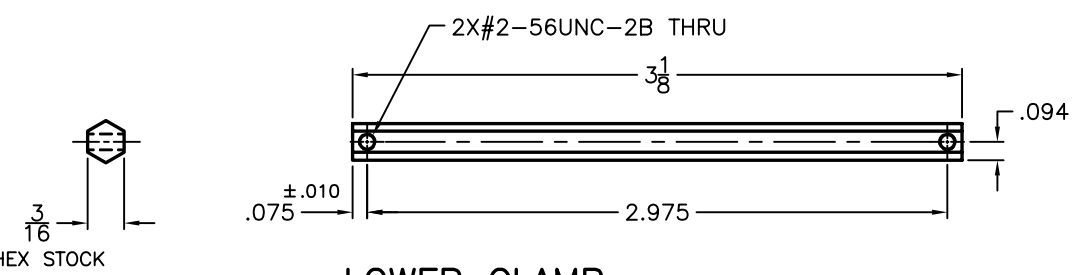

LOWER CLAMP

(80 REQUIRED)

NOTES:
1. MATERIAL: ALLOY 360 FREE-MACHINING BRASS HEXAGON 3/16" HEX SIZE, 6' LENGTH, MCMASTER-CARR 8952K32

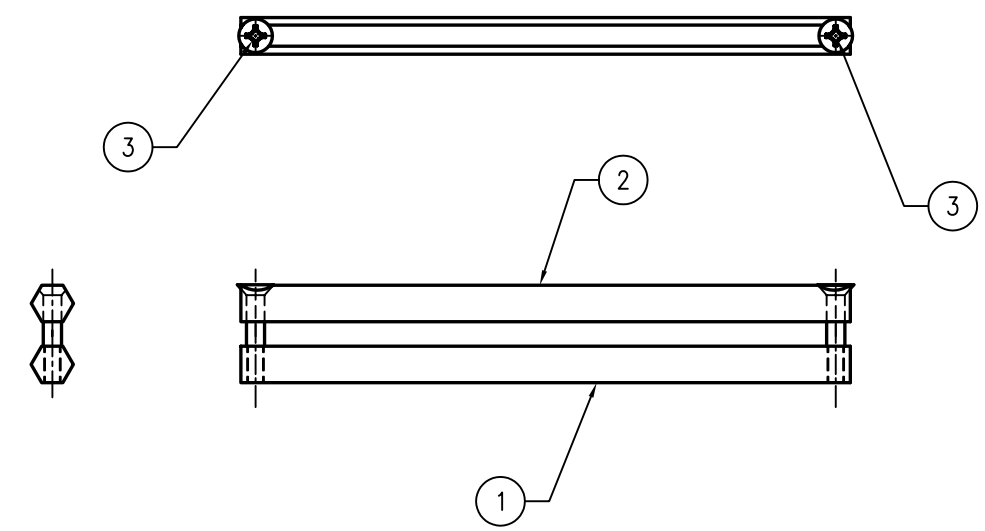

CLAMP ASSEMBLY

(80 REQUIRED)

ITEM NO.	QTY.	PART NUMBER	DESCRIPTION	REMARKS
3	2	91771A081	18-8 SS FLAT HD PHILLIPS MACHINE SCREW 2-56,1/2" LG	MCMASTER-CARR
2	1	UPPER CLAMP		SEE SHEET 1
1	1	LOWER CLAMP		SEE SHEET 1

BILL OF MATERIALS

INTERPRET IN ACCORDANCE WITH ANSI Y14.5M-1994
UNLESS OTHERWISE SPECIFIED DIMENSIONS ARE IN INCHES
DECIMAL TOLERANCES
.X ±.03
.XX ±.02
.XXX ±.005
ANGULAR TOLERANCE ±1°
DO NOT SCALE DRAWING
125 FINISH
MATERIAL: SEE NOTE 1
USED ON DRAWING NO. | QTY. REQ'D.
APPLICATION

STAR — SOLENOIDAL TANCHER AT B.N.L.G. BUILDING 1000
DRAWN JKSchubkin 8/22/94
CHECKED John Schubkin 8/94
ENGINEER Phil Kuczewski 8/94
APPROVED Ralph L. Brown 8/94
Q.A. R.L.B. 8/94
Q.A. CHECKLIST A-3
FILENAME

BROOKHAVEN
SPRING, NEW YORK, 11973-5000
TITLE: RHIC-SVT MISC. SYSTEMS 100 PIN CONNECTOR CLAMP
SIZE B | SVT402-B-1 | REV. A
SCALE 2/1 | DESIGN: — | SHEET 1 OF 2

STAR DWG NO. SVT402-B-1 | SHEET 1 OF 1 | A

INTERPRET IN ACCORDANCE WITH ANSI Y14.5M-1994
UNLESS OTHERWISE SPECIFIED DIMENSIONS ARE IN INCHES
DECIMAL TOLERANCES
.X ±.03
.XX ±.02
.XXX ±.005
ANGULAR TOLERANCE ±1°
DO NOT SCALE DRAWING
125 FINISH
MATERIAL: SEE NOTE 1
USED ON DRAWING NO. | QTY. REQ'D.
APPLICATION

STAR — SOLENOIDAL TANCHER AT B.N.L.G. BUILDING 1000
DRAWN JKSchubkin 8/22/94
CHECKED John Schubkin 8/94
ENGINEER Phil Kuczewski 8/94
APPROVED Ralph L. Brown 8/94
Q.A. R.L.B. 8/94
Q.A. CHECKLIST A-3
FILENAME

BROOKHAVEN
SPRING, NEW YORK, 11973-5000
TITLE: RHIC-SVT MISC. SYSTEMS 100 PIN CONNECTOR CLAMP
SIZE B | SVT403-B-2 | REV. A
SCALE 2/1 | DESIGN: — | SHEET 2 OF 2

STAR DWG NO. SVT403-B-2 | SHEET 2 OF 2 | A