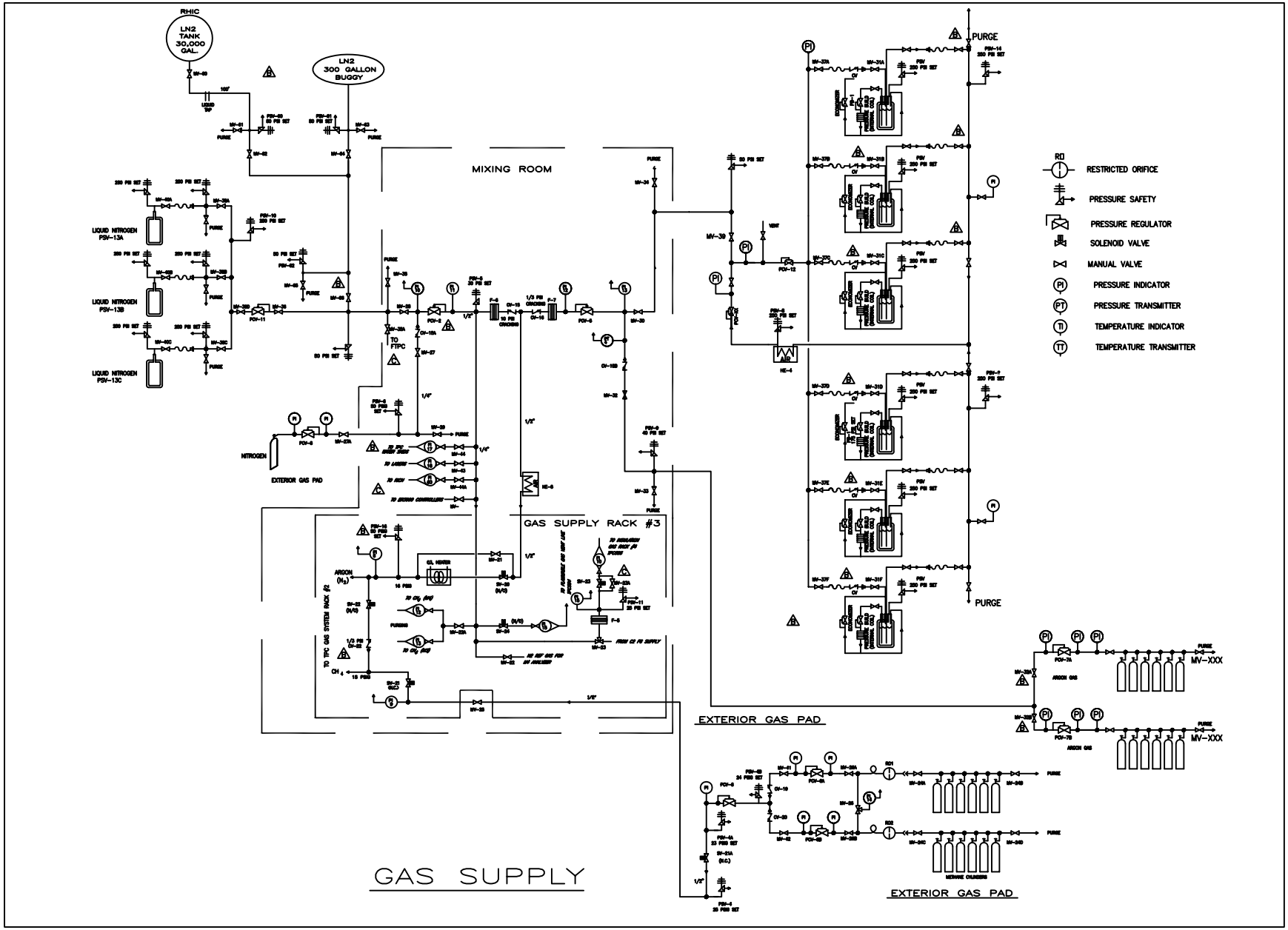
RHIC
LN2 TANK 30,000 GAL.
LN2 300 GALLON BUGGY
MIXING ROOM
LIQUID NITROGEN PSV-13A
LIQUID NITROGEN PSV-13B
LIQUID NITROGEN PSV-13C
NITROGEN
EXTERIOR GAS PAD
GAS SUPPLY RACK #3
ARGON
PURGE
RO
RESTRICTED ORIFICE
PRESSURE SAFETY
PRESSURE REGULATOR
SOLENOID VALVE
MANUAL VALVE
PI
PRESSURE INDICATOR
PT
PRESSURE TRANSMITTER
TI
TEMPERATURE INDICATOR
TT
TEMPERATURE TRANSMITTER
MV-XXX
EXTERIOR GAS PAD
EXTERIOR GAS PAD
GAS SUPPLY