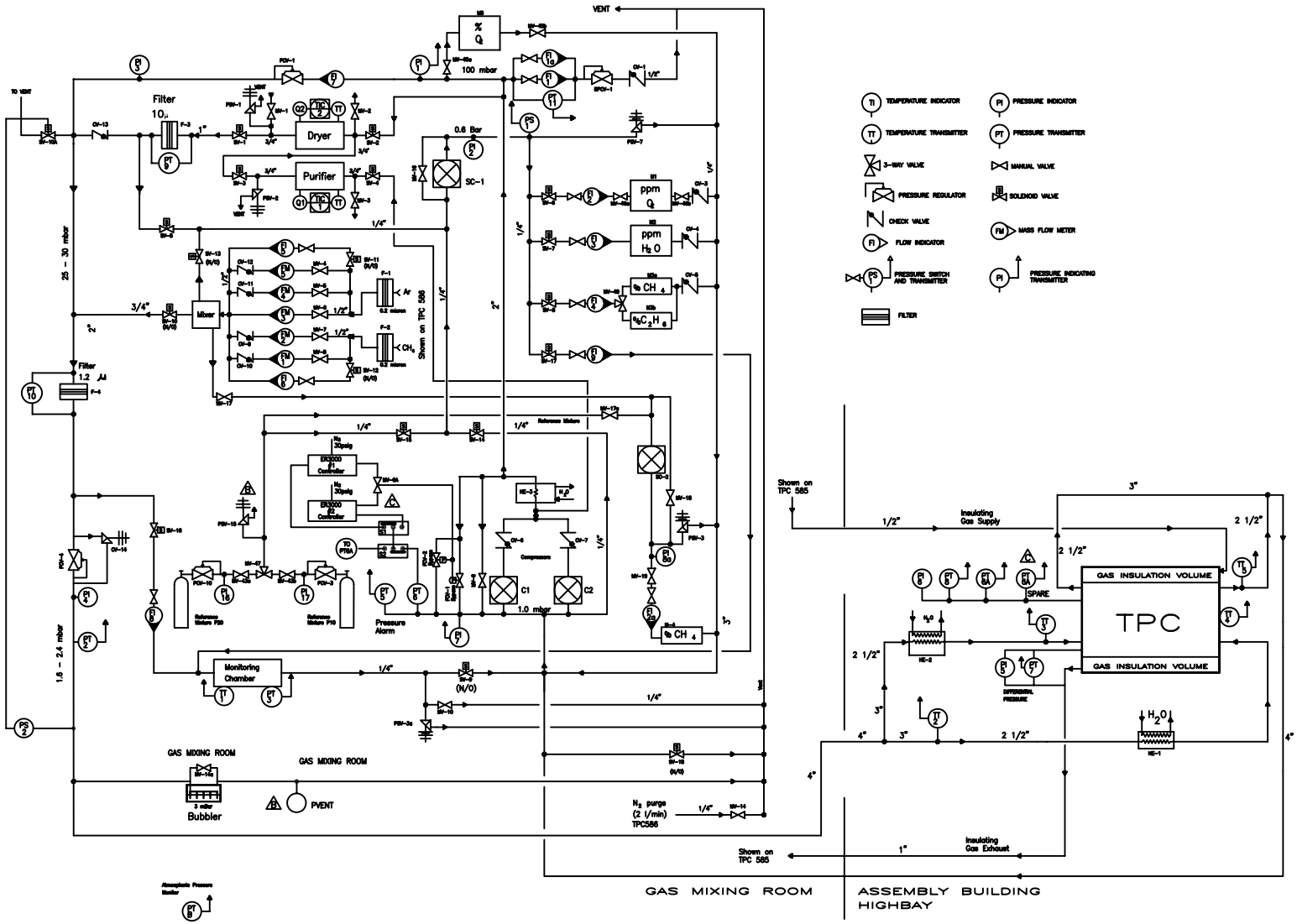


# TPC P10 GAS SYSTEM