ATF CO_2 LASER SYSTEM PITER I ALIGNMENT PROCEDURES

This procedure describes how to restore optimum alignment of the ATF CO_2 laser system PITER I. It shall be performed by Level 1 laser operator authorized to work on the system. List of qualified ATF CO_2 laser operators is posted in the ATF Control Room and in the ATF CO_2 Laser Room C2, see also on Web http://nslsweb.nsls.bnl.gov/AccTest/Safety/ATF_LAS_010.pdf. Laser safety goggles certified for PITER I laser shall be worn all the time when rooms C1 and C2 are interlocked.

The ATF CO_2 laser system consists of several components: oscillator, picosecond switch, preamplifier, booster amplifier. As is described below, there are several levels of complexity for aligning each component that are recommended for typical situations of the performance degradation.

1. CO_2 oscillator alignment (refer to Fig.1)

1a. Alignment procedure applied when degradation in the output energy or spatial distribution is detected

1a.1 Put on laser safety goggles certified for use with PITER I laser system (block 10 μm and 1 μm radiation).

1a.2 Interlock C2 room

1a.3 Open an access port in the oscillator cover

1a.4 Turn on CO_2 oscillator using procedure "ATF CO_2 laser system PITER I operations: turning the system on" http://nslsweb.nsls.bnl.gov/AccTest/Safety/ATF_LAS_007.pdf.

1a.5 Tuning micrometer adjustments of the output mirror in the oscillator cavity restore the oscillator output parameters.

1b. Alignment procedure applied when the oscillator output is lost and can not be restored by procedure 1a, or after optics or other components are replaced in the oscillator

1b.1 Red tag the oscillator AC power supply

1b.2 Remove the oscillator cover

1b.3 Set the alignment HeNe laser and a thin beamsplitter BS as shown in Fig.1.

1b.4 Adjust mirror M3 and beamsplitter BS to send the alignment HeNe beam through the iris diaphragms ID1 and ID2. Both discharge cells (main and low pressure) shall be centered on the alignment beam,

1b.5 Tune mirror M1 to retro-reflect the alignment beam

1b.6 With removed mirror M2 align the output beam diagnostic.
1b.7 Place mirror M2 centered on the alignment beam. Tune mirror M2 to retro-reflect the alignment beam
1b.8 Close the oscillator cover, remove red tag.
1b.9 Use procedure 1a to maximize the output signal.

2. Semiconductor switch alignment (refer to Fig.2)

These procedures are performed after steps 1a.1 and 1a.2 and when a CO2 laser oscillator is in operation

2a. If incomplete slicing is detected observing the transmitted signal on the scope, use an IR sensitive card to overlap the YAG and CO_2 laser beams in front of the semiconductor switch.

2b. When a low contrast switching is detected (a high background content in the intracavity pulse train from the regenerative preamplifier):

2b.1 Turn the YAG shutter off
2b.2 Put a joulemeter or a fast detector into the CO_2 laser beam behind the semiconductor switch.
2b.3 Using micrometer screws adjust half-wave plate P1 rotation and tilt angles of a semiconductor switch to minimize signal reflected by the switch.

3. Preamplifier alignment (refer to Fig.2)

These procedures are performed after steps 1a.1 and 1a.2 and when a CO2 laser oscillator is in operation

3a. Regenerative cavity alignment

3a.1 Set half-wave plates P1 and P2 at 45^0 from the working orientation (this allows a strong reflection from the semiconductor switch and corrects polarization to enter the regenerative cavity).
3a.2 Place a pyroviewer after dielectric mirror M4. Check centering of the CO_2 beam on ID1 and ID2.
3a.3 Place a kinematic mirror after the entrance diaphragm ID5, direct beam on a pyroviewer; check centering of the laser beam on ID3,4,5.
3a.4 Place pyroviewer after dielectric mirror M4; rotate quarter-wave plate P3 45^0; observe reflection from mirror M7; tilt mirror M7 to center the reflected beam on ID3.
3a.5 Rotate quarter-wave plate P3 back to working position; observe flashing on graphite paper placed after the telescope pinhole PH.

3a.6 Put Cu kinematic mirror after ID6; direct beam on a pyroviewer; check laser beam centering on the pinhole PH and ID6; center iris diaphragm placed in front of the pyroviewer.
3a.7 Put HeNe kinematic mirror; align HeNe3 laser through ID6 and the diaphragm in front of the pyroviewer.
3a.8 Remove Cu kinematic mirror; align HeNe3 laser through ID6,7.

3a.9 Remove HeNe kinematic mirror; observe reflection from mirror M10 on pyroviewer; tilt the mirror M10 to maximize the reflection.

3b. Multi-pass alignment

3b.1 Put quarter-wave plate P4; put Cu kinematic mirror after ID9; direct beam on a pyroviewer; Maximize the transmission by tilting mirror M11.

3b.2 Check laser beam centering on ID8 and ID9; adjust ID9 if necessary; center iris diaphragm placed in front of the pyroviewer.

3b.3 Put HeNe kinematic mirror; align HeNe3 laser through ID9 and the diaphragm in front of the pyroviewer.

3b.4 Remove Cu kinematic mirror; align HeNe3 laser through ID10 and ID11.

3b.5 Remove HeNe kinematic mirror; observe CO_2 beam on a pyroviewer; tilt mirror M13 to center the beam on ID11.

3b.6 Turn on preamplifier using procedure "ATF CO_2 laser system PITER I operations: turning the system on".

3b.7 Align HeNe6 laser (see Fig.2) to the preamplifier output.

4. Booster amplifier alignment (refer to Fig.3)

4a Align HeNe6 laser through a transport line between rooms C1 and C2 and on diaphragms ID1 and ID2 (see Fig.3).

4b Align local HeNe laser in room C2 through diaphragms ID1 and ID2 and with mirrors M2,3,4 into the amplifier entrance.

4c With an open amplifier vessel align HeNe beam at the center of each mirror M5,6,7. An output beam shall be centered on the output window and mirrors M8 and M9.

4d Close and pressurize the amplifier vessel. When the vessel is pressurized, access to mirror M4 is prohibited. Use external mirrors M2 and M3 for fine alignment of the beam into the amplifier.

4e Put on laser safety goggles certified for use with PITER I laser system (block 10 μm and 1 μm radiation).

4f Interlock C1 and C2 rooms.

4g Turn on PITER I laser system using procedure "ATF CO_2 laser system PITER I operations: turning the system on".

4h Correct HeNe alignment by comparison with the amplified CO_2 laser beam.

4j Reintroduce HeNe beam with a kinematic mirror at the amplifier output, coalign with the CO_2 beam, use for setting transport optics in the experimental hall.

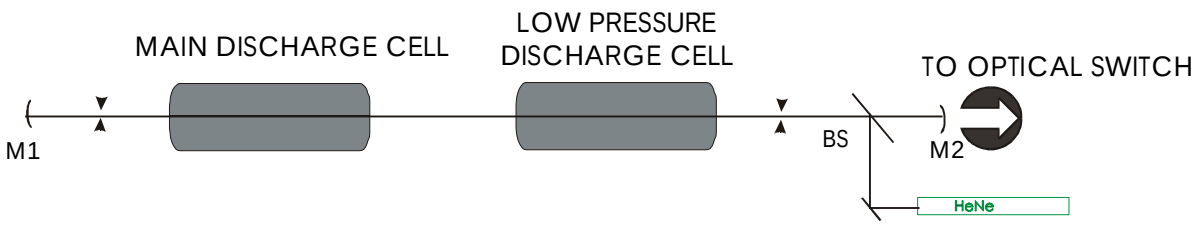

FIGURE 1

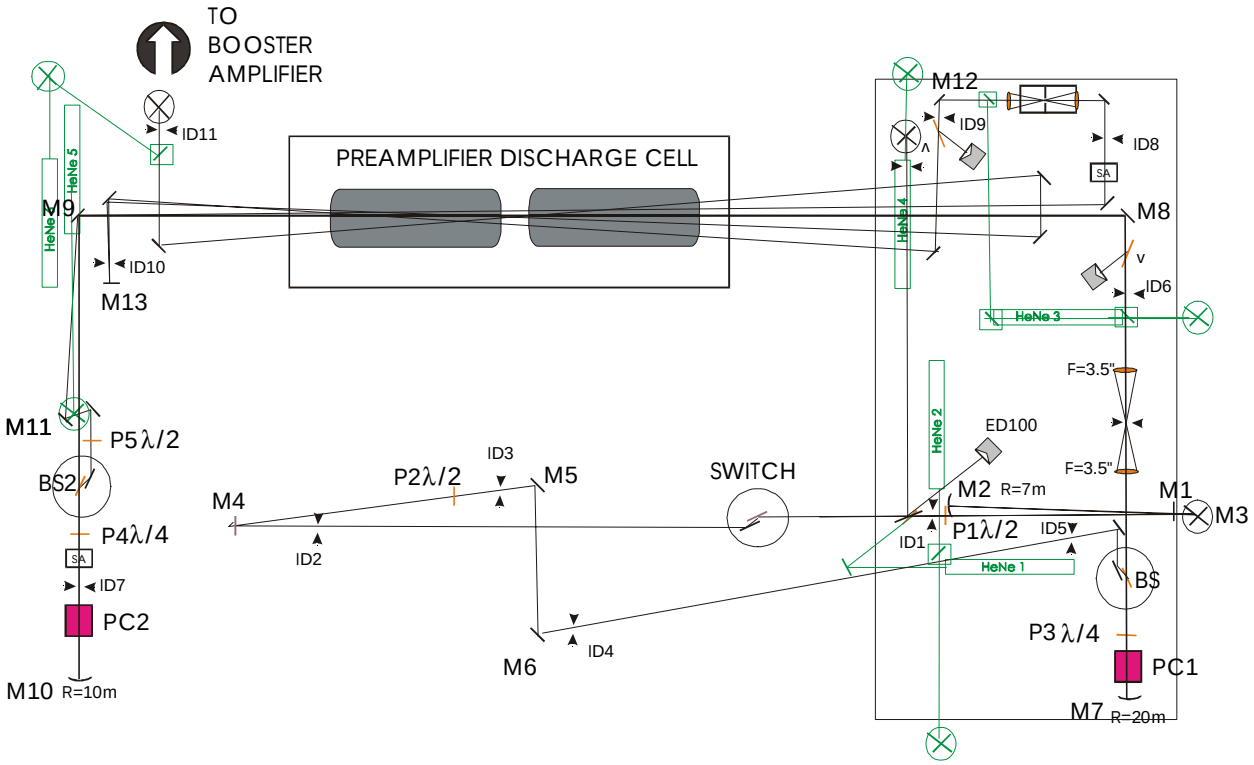

FIGURE 2

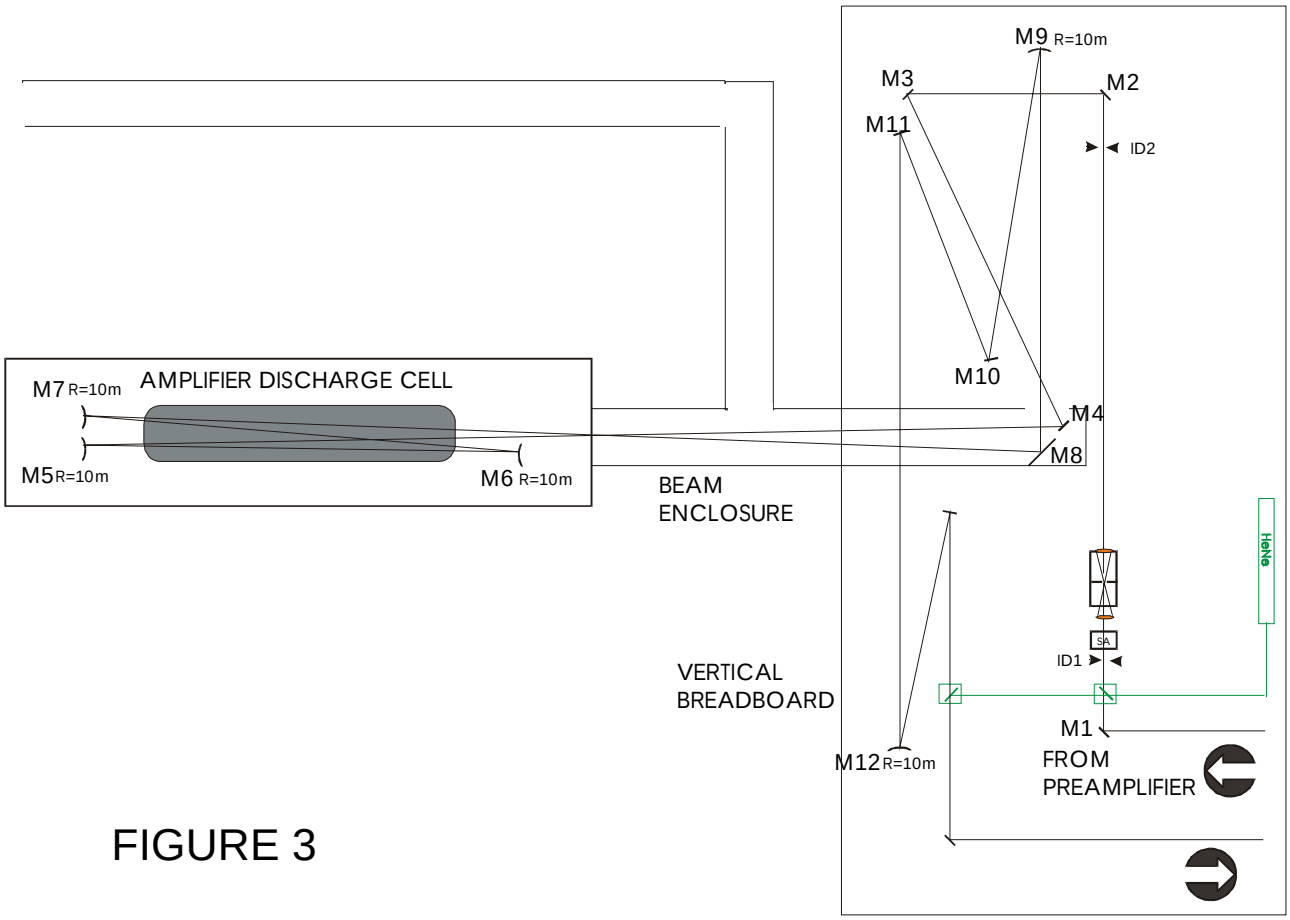
M9 R=10m
M3
M2
M11
ID2
M10
M7 R=10m
AMPLIFIER DISCHARGE CELL
M4
M8
M5 R=10m
M6 R=10m
BEAM
ENCLOSURE
HeNe
SA
ID1
VERTICAL
BREADBOARD
M1
M12 R=10m
FROM
PREAMPLIFIER

FIGURE 3