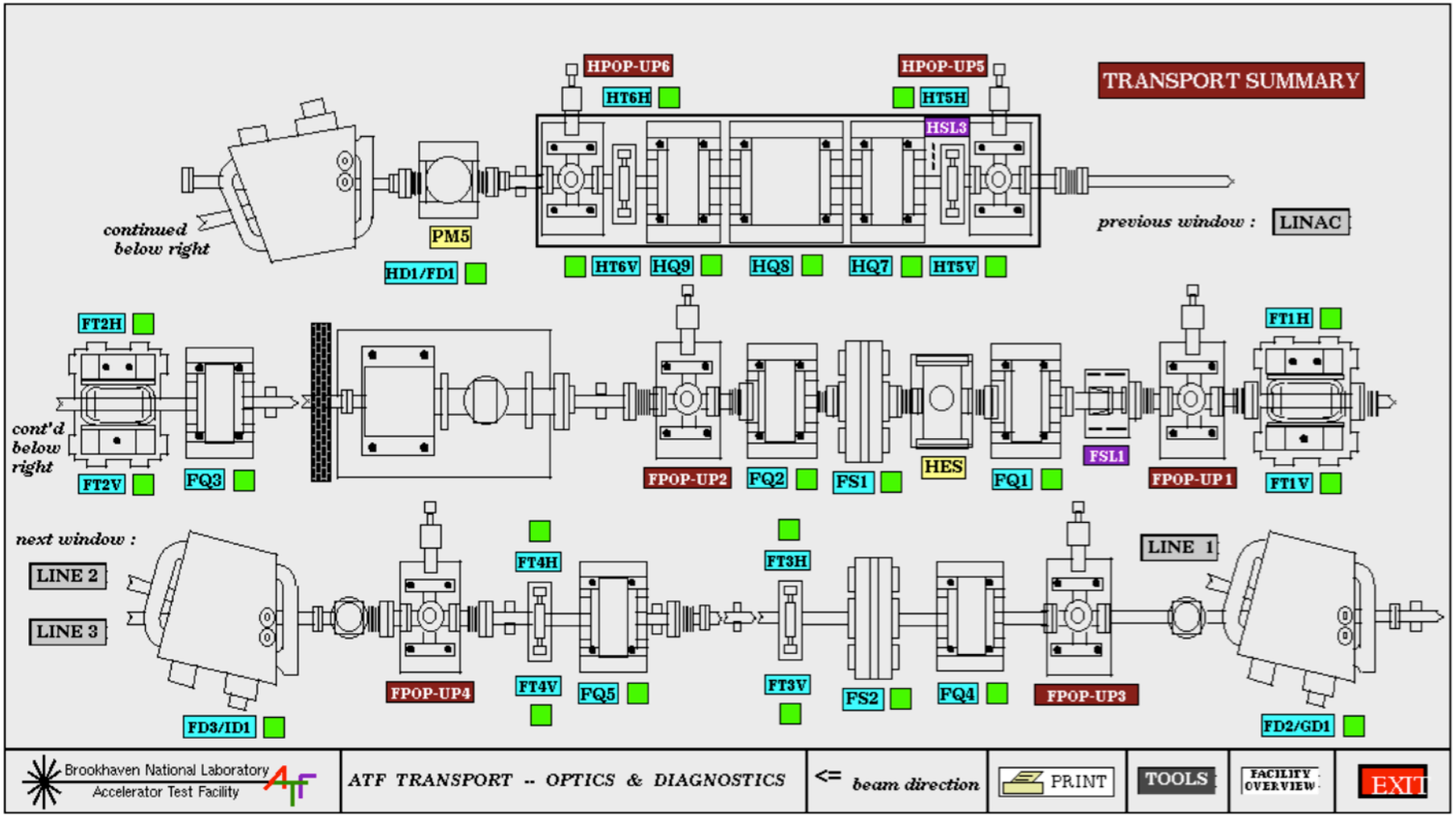

Figure: Screenshot of the ATF beam transport line control system panel (this is intended as a guide only and may be out of date with the continually varying beamline setup).