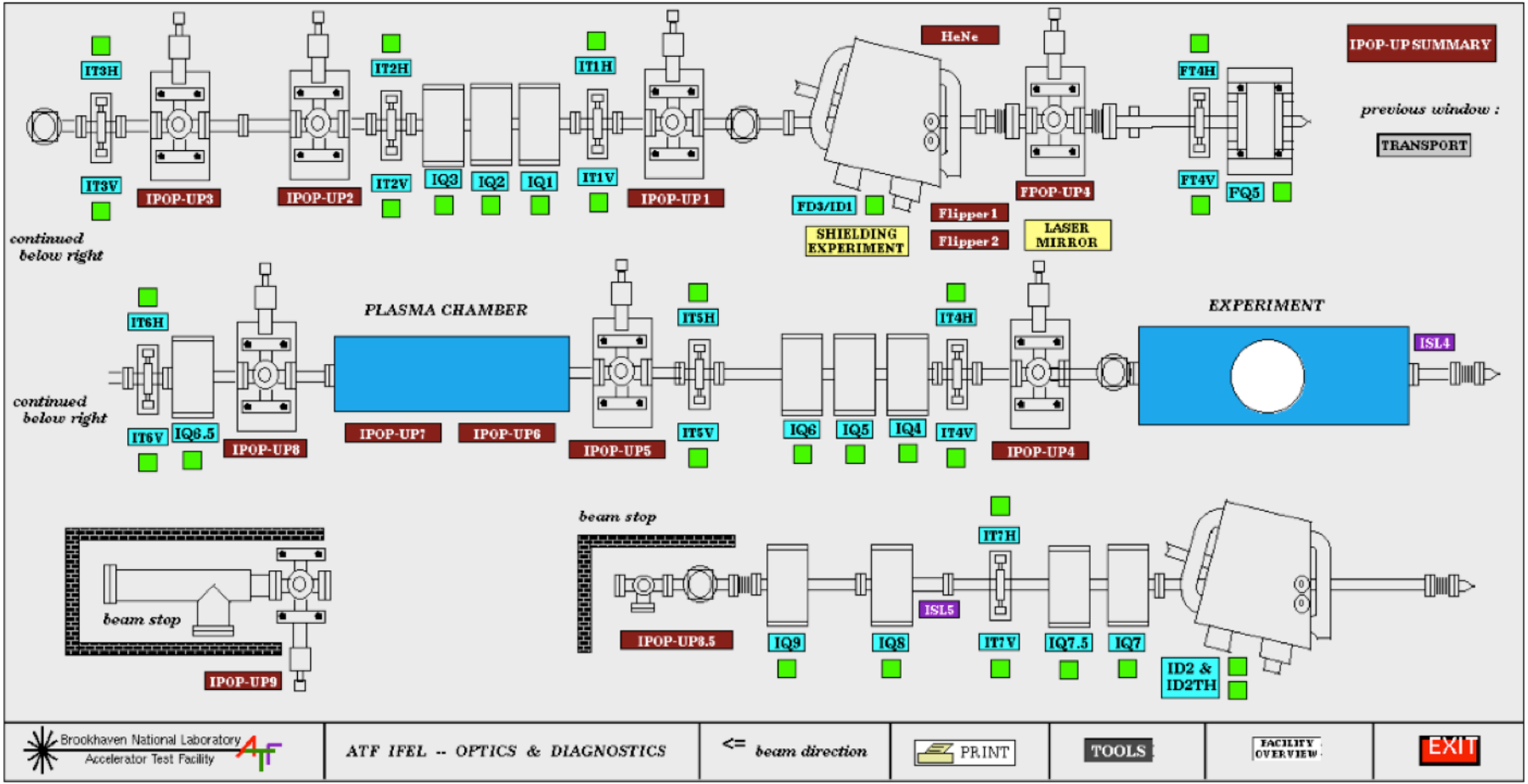

Figure: Screenshot of the ATF beamline 2 control system panel (this is intended as a guide only and may be out of date with the continually varying beamline setup).