eRHIC Accelerator R&D (part 2)

G. Wang

Collider-Accelerator Department, BNL

RHIC & AGS Annual Users' Meeting, June 13th , 2012

Outline

- Coherent electron cooling
  - Overview
  - Introduction to concept
  - Status of proof of principle experiment
- Energy recovery linac
  - Introduction to concept
  - Status and plan of R&D ERL in BNL
- Polarized electron source
  - ‘Gatling gun’ concept
  - LDRD ‘Gatling gun’ project

Coherent Electron Cooling Overview

- Achieving eRHIC luminosity of 10^{34} requires effective beam cooling.
- Traditional stochastic cooling does not have enough bandwidth to cool intense proton beams.
- Efficiency of traditional electron cooling falls as a high power of hadron's energy.
- Coherent Electron Cooling, using an electron beam as pick-up and kicker, has the potential for cooling high intensity beam at high energy.

Machine	Species	Energy GeV/n	Stochastic Cooling, hrs	Synchrotron radiation, hrs	Electron cooling, hrs	Coherent Electron Cooling, hrs 1D/3D
RHIC PoP	*Au*	*40*	-	-	~ 1	*0.02/0.06*
eRHIC	*Au*	100	~1	21,000/∞	~ 1	0.015/0.05
eRHIC	*p*	250	~100	40,000/∞	> 30	0.1/0.3
RHIC	*pp*	250	~100	40,000/∞	> 30	0.1/0.3

Courtesy of I. Pinayev

The Concept of Coherent Electron Cooling

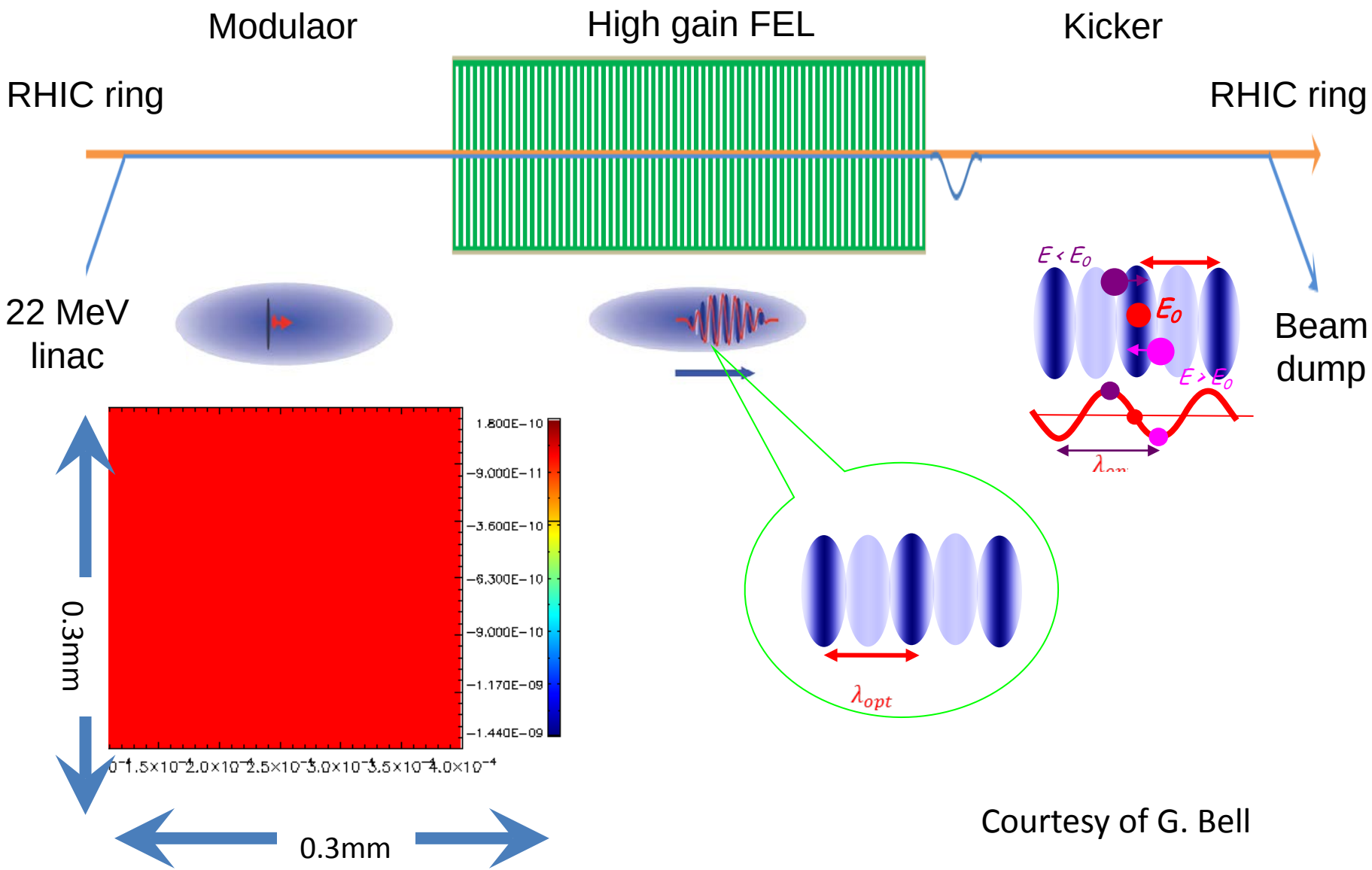

Courtesy of G. Bell

Status of Simulation and Theoretical Studies for CeC

- Analytical model based on 1D FEL theory have been completed in 2010. Progresses towards a 3D analytical model with finite beam size have been made recently.
- Computer simulations based on PIC qualitatively agree with theoretical calculation in the applicable parameter region. More realistic start-to-end simulation is to be finished in 2012.

(Courtesy of G. Bell)

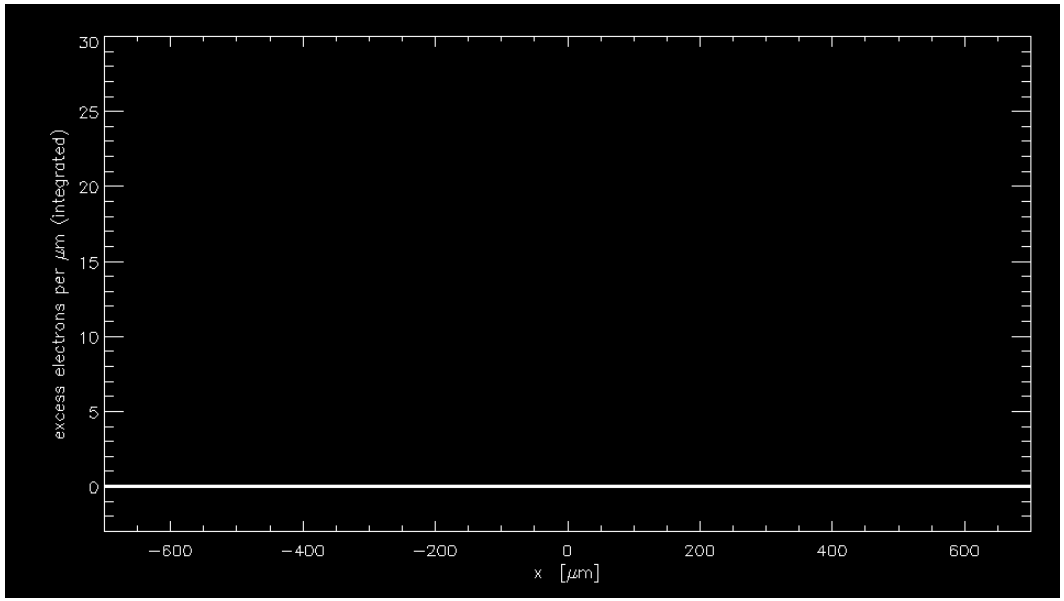

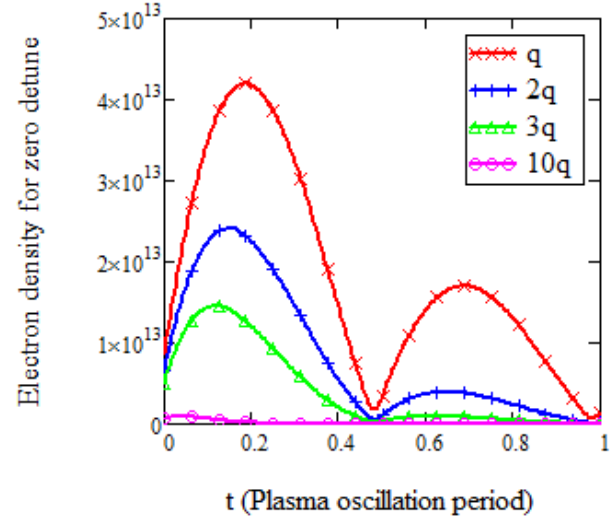

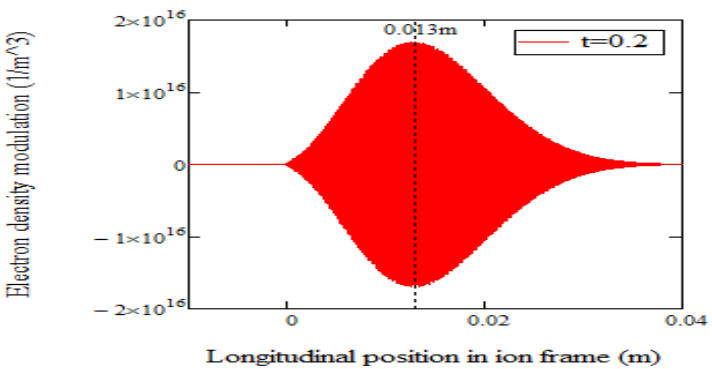

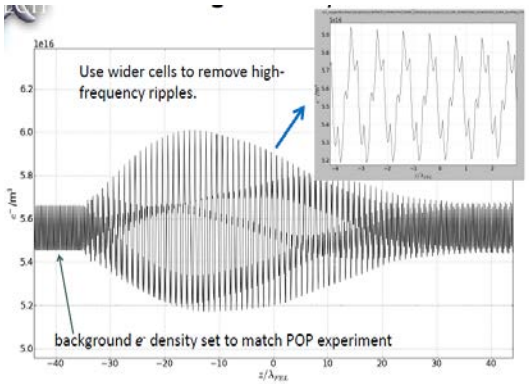

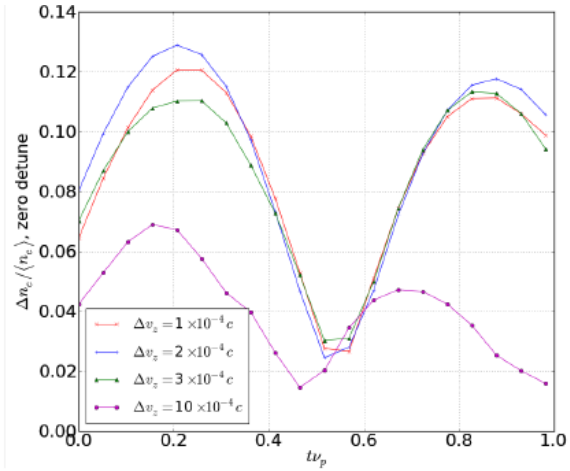

Coherent Electron Cooling
Proof-of-Principle experiment is under construction at RHIC's IP2

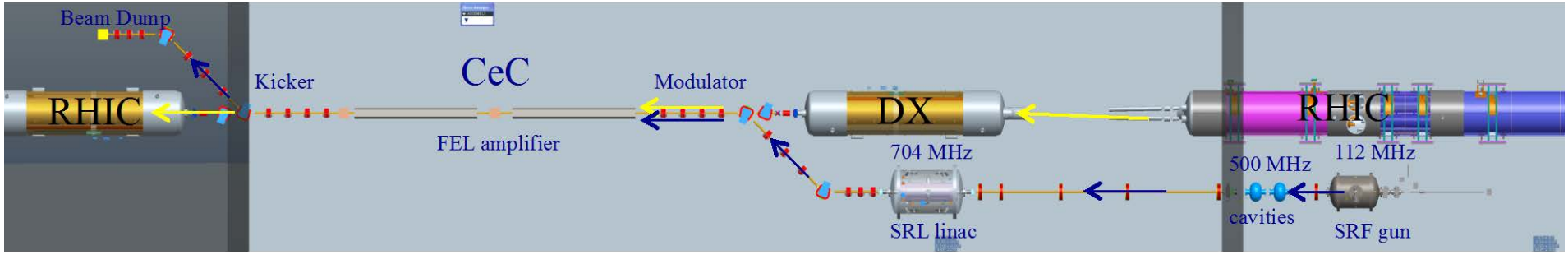

Main parameters for the CeC experiment with $^{197}Au^{79}$ ions

Parameter	*Units*	
Ion's energy	GeV/u	40
RMS norm. emittance, x,y	mm mrad	2
Ion per bunch		1×10^{9}
Longitudinal emittance	eV sec	0.5
RMS bunch-length	nsec	1.5
RMS momentum spread		3.5×10^{-4}
β*	m	5.5
Rep-rate	kHz	78.3
Electron beam energy	MeV	21.8
Charge per bunch	nC	0.5-5
RMS normalized emittance	mm mrad	5
Peak current in FEL	A	60-100
RMS energy spread		1×10^{-3}
Electrons per bunch	$\times10^{9}$	3.1-6.2
Electrons beam current	μA	390
e-beam power	kW	8.5
Length of the CeC	m	14
Length of FEL wiggler	m	7
Type of wiggler		Helical
Wiggler period	cm	4
Wiggler parameter, a_w		0.437
FEL wavelength	μm	13

Normalized Emittances and Energy Spread along the CEC POP Injector Line

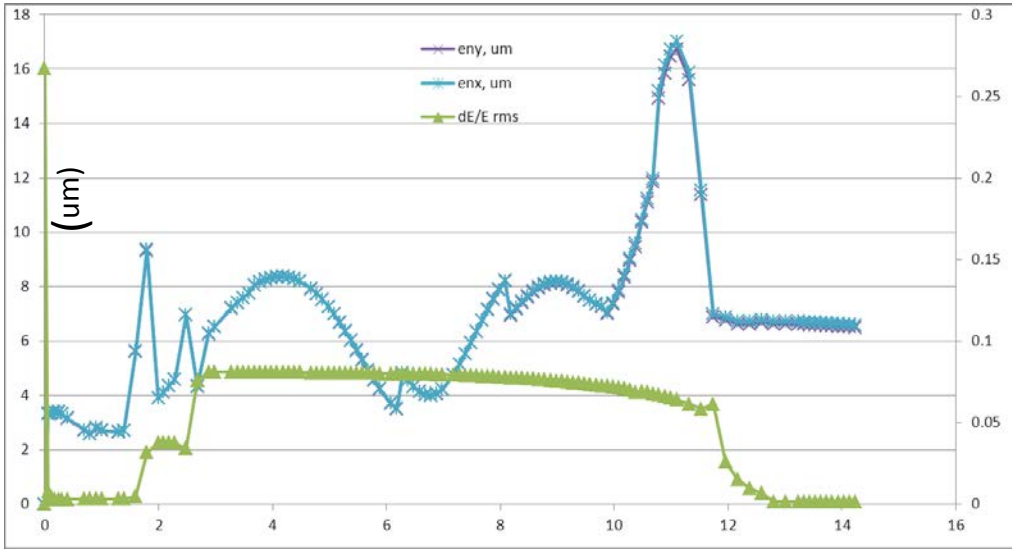

Spectra of Cooled Beam

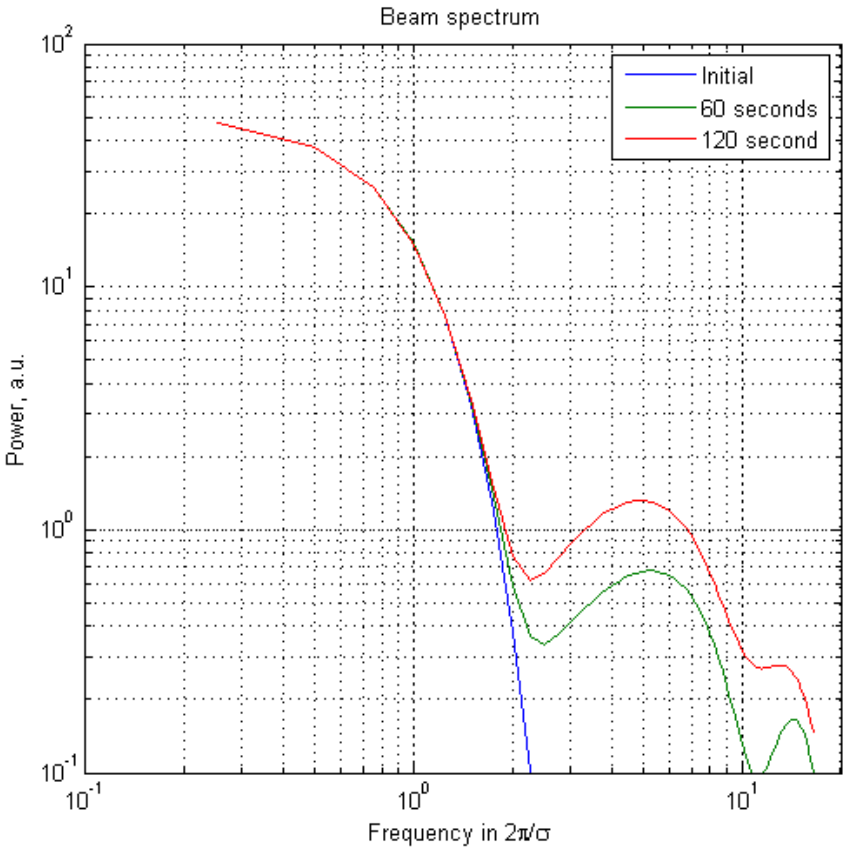

- For the Au ions r.m.s. bunch length is 1.5 ns
- That makes r.m.s. length of the cooled part 80-120 ps
- The cooling effects can be observed with oscilloscope 2 GHz or more bandwidth or spectrum analyzer with similar upper frequency

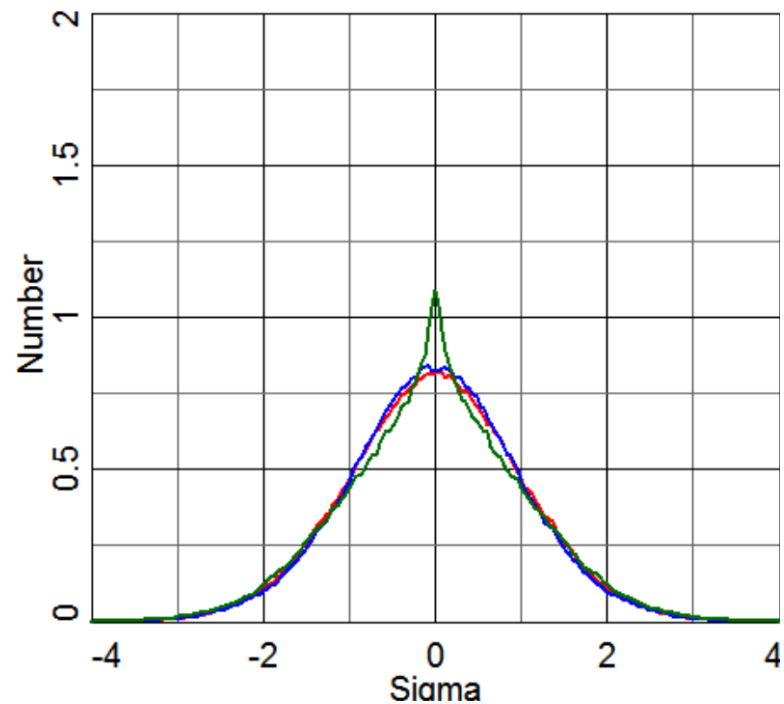

Modeling of cooling is performed with betacool by A. Fedotov

Courtesy of I. Pinayev

CeC Status

- Project towards demonstration of coherent electron cooling using Au ions in RHIC at ~ 40 GeV/n was started in FY11
  - Both theory and simulation tools for CeC are progressing well
  - RHIC 40 GeV ramp has been developed during run 11 APEX session. Au beam orbit stability, arriving time jitter and WCM spectrum are measured during run 12 APEX session.
  - Design and procurement of RF systems is in progress
    - Design and procurements of $2.2M cryogenic system for CeC experiment started
    - Order for 112 MHz SRF gun is being processed
    - 500 MHz cavities (on loan from Daresbury Lab) arrived to BNL
    - Design of the 704 MHz SRF linac progressing well

Courtesy of I. Pinayev

R&D ERL at BNL

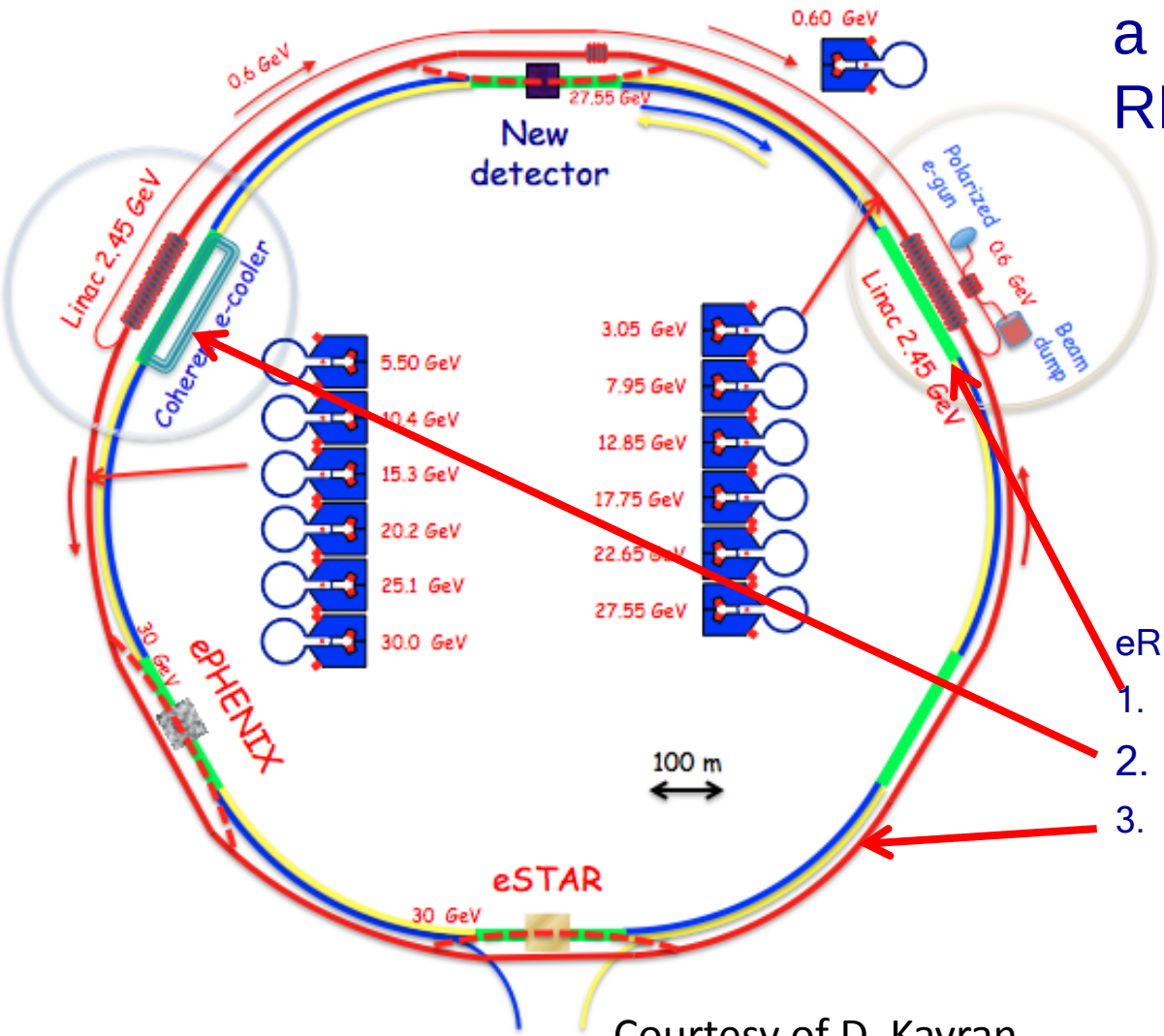

Courtesy of D. Kayran

R&D ERL will serve as a test-bed for future RHIC projects:

- ERL-based coherent electron cooling.
- ERL-based electron ion collider: eRHIC.

eRHIC, High energy and luminosity:

1. 600 MeV **ERL** injector
2. Coherent electron cooler **ERL**
3. Main eRHIC 6 passes 30 GeV **ERL**

Energy recovery* linacs (ERLs)

(with the same cavity energy recovery)

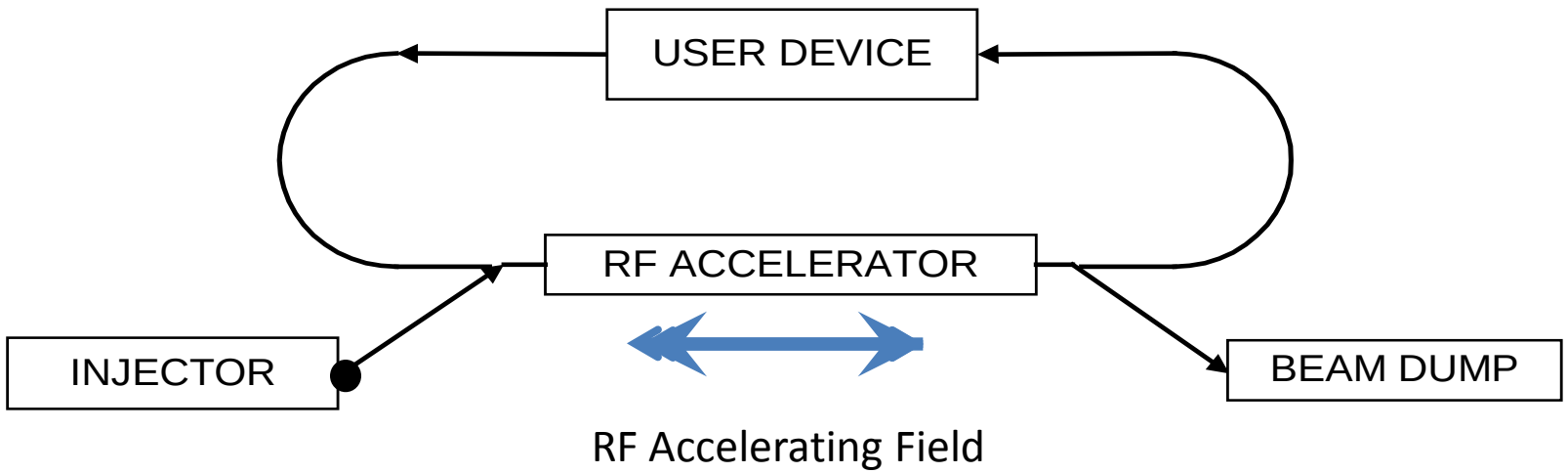

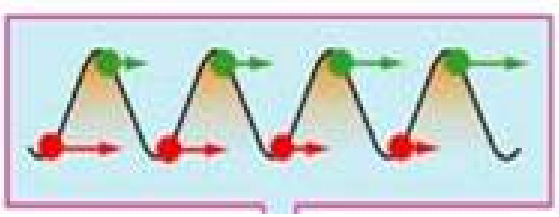

1) Accelerate in 1st pass of RF cavity
2) The return loop is N plus ½ RF wavelengths.
3) Recovery energy in 2nd pass RF cavity

***Energy Recovery** - process by which the energy invested in accelerating particles is returned to the RF cavities by decelerating them, and re-used to accelerate others

Courtesy of D. Kayran

Schematic Layout of the BNL ERL

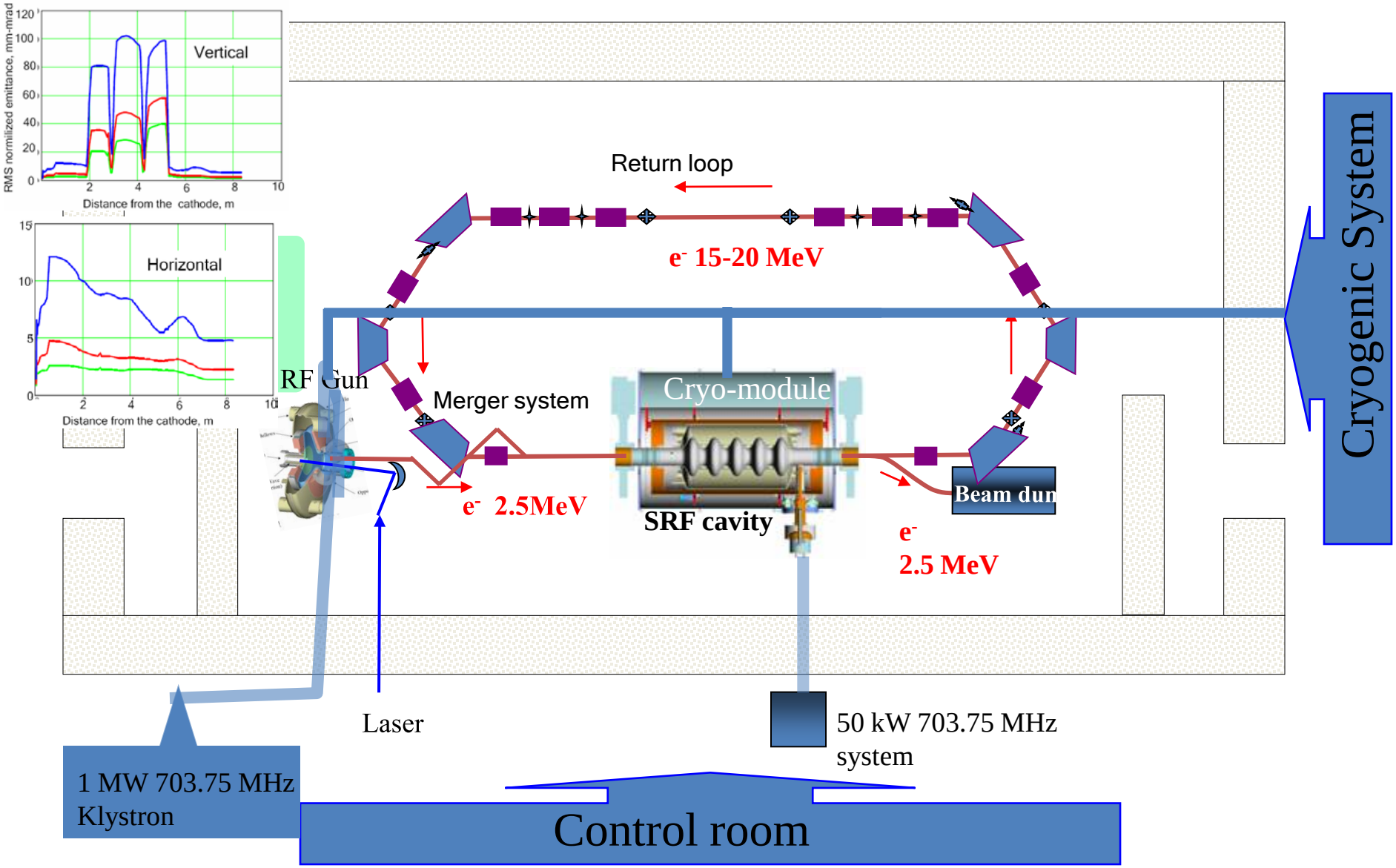

Courtesy of D. Kayran

BNL R&D ERL beam parameters

Parameter \ Operation regime	High Current	High charge
Charge per bunch, nC	0.7	5
Numbers of passes	1	1
Energy maximum/injection, MeV	20/2.5	20/3.0
Bunch rep-rate, MHz	700	9.383
Average current, mA	500	50
Injected/ejected beam power, MW	1.0	0.15
R.m.s. Normalized emittances ex/ey, mm*mrad	1.4/1.4	4.8/5.3
R.m.s. Energy spread, $\delta E/E$	3.5×10^{-3}	1×10^{-2}
R.m.s. Bunch length, ps	18	31

ERL Status and Plans:

- We are in construction stage and getting ready for the first stage of ERL commissioning : SRF Gun test
- Then the injection merger will be installed in order to test the concept of emittance preservation in a beam merger.
- Then the recirculation loop will be completed to demonstrate energy recovery with high charge per bunch and high beam current.

Courtesy of D. Kayran

Polarized Electron Source

- The luminosity of eRHIC for polarized collision depends on the current of polarized electron beam. To reach the designed eRHIC luminosity, ~50mA of polarized electron current is needed, which is far beyond what the state-of-art polarized electron cathode can deliver.

- A possible approach to achieving a higher current beam is to employ multiple cathodes and combine their multiple bunched beams along the same axis, i.e.

the 'gatling gun' concept.

“Gatling Gun” concept

Target photo current to be 2.5 mA / cathode, beam current to be > 50 mA @ 200 kV

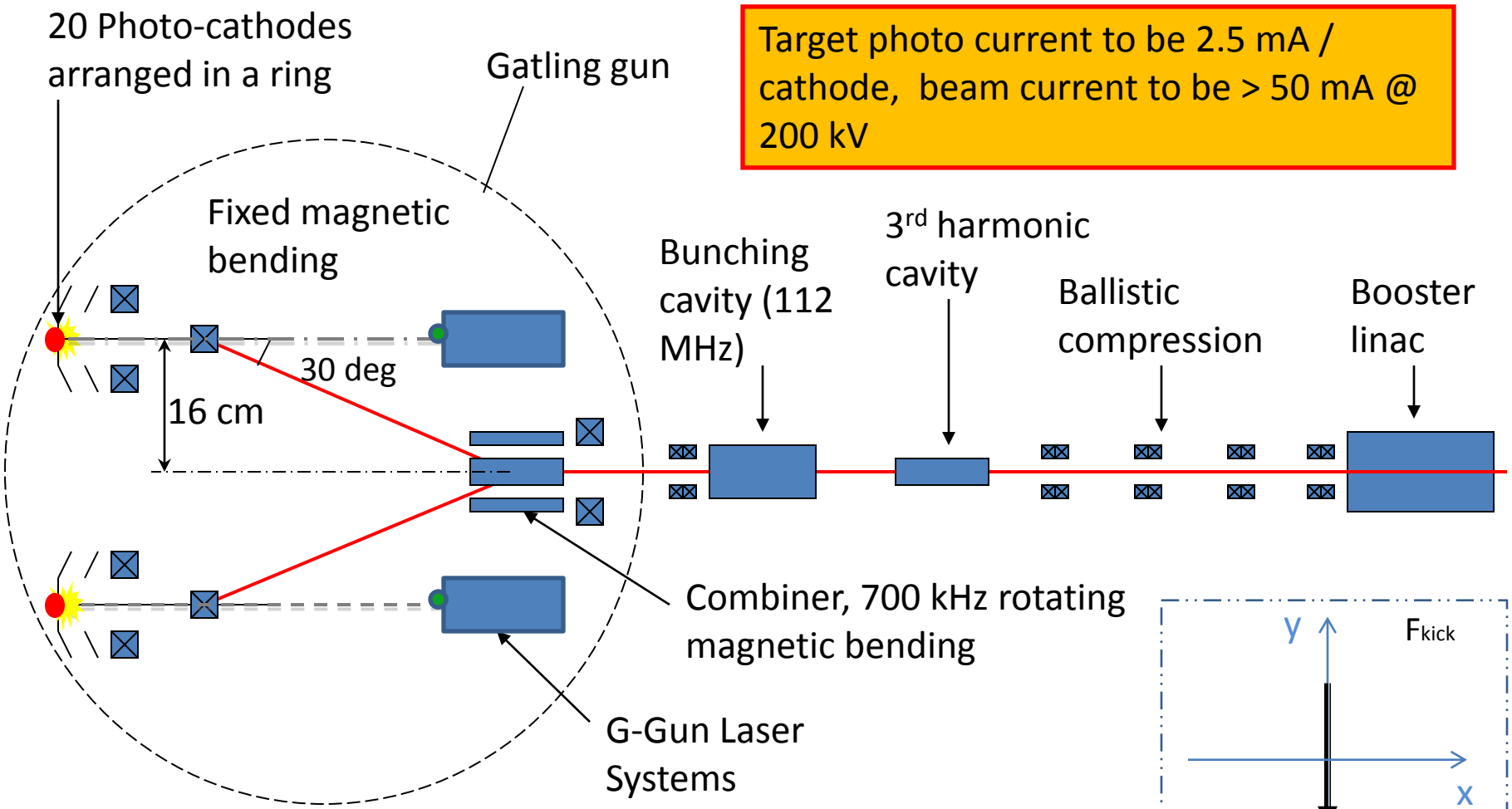

Courtesy of J. Skaritka

Combiner Design and Development

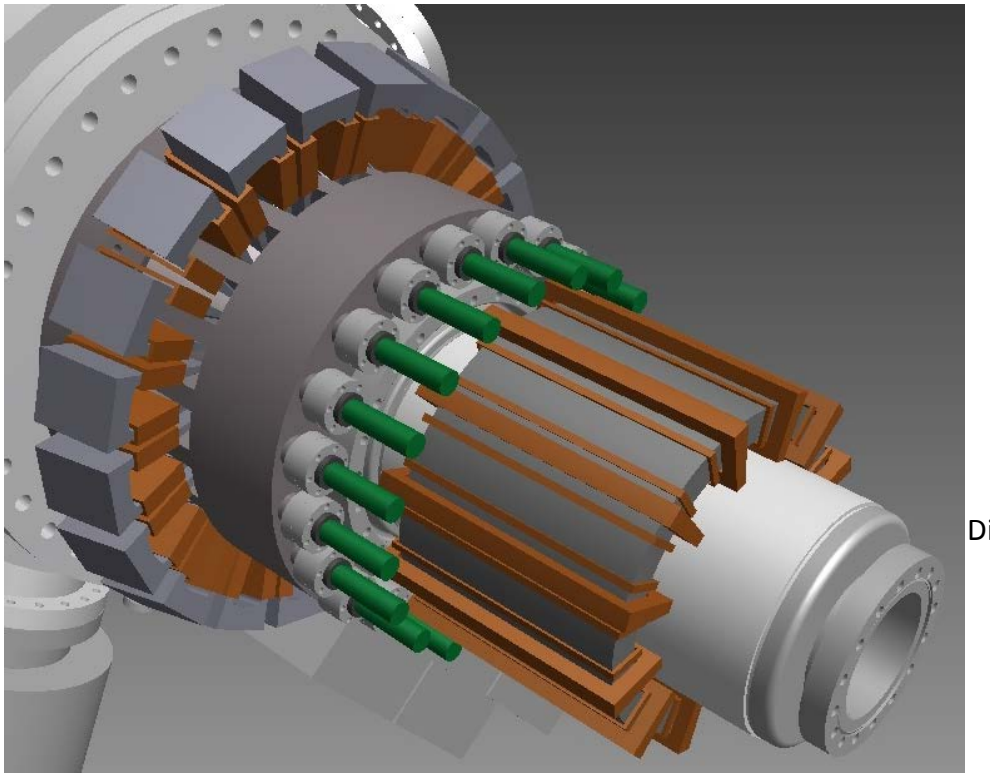

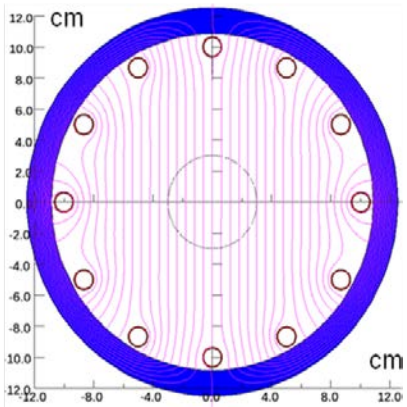

$R_{good\ field}$ ($B_{sextupole} < 5 \times 10^{-4}$) > 3cm

Dipole coil

Quadrupole coil

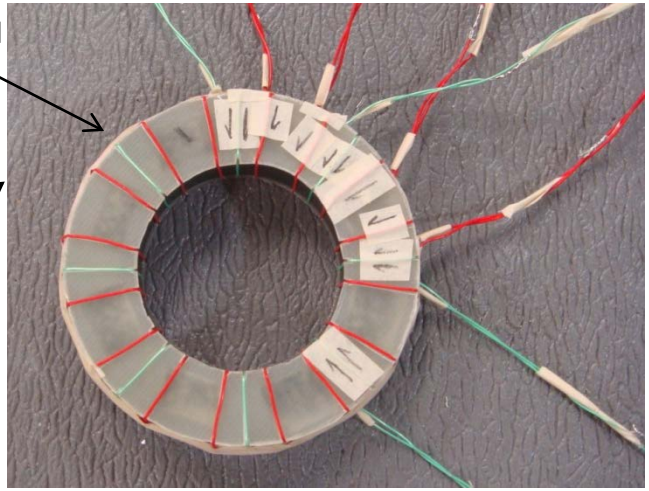

Test rotating field coils

A hollow ferrite cylinder surrounds an alumina vacuum tube. Cosine θ and 2θ current distributions in copper windings produce rotating dipole and quadrupole fields that bend and focus the e-beam as it exits the Gun.

I. Ben-Zvi, X. Chang, V. Litvinenko, W. Meng, A. Pikin, and J. Skaritka, Generating high-frequency, rotating magnetic fields with low harmonic content, Phys. Rev. ST Accel. Beams 14, 092001 (2011)

Courtesy of J. Skaritka

Gatling Gun LDRD Project

- The motivation is to develop a high-current polarized electron gun aimed at eRHIC, where the requirement is 50 mA average current.
- The specific approach is to use funneling of beams from multiple cathodes in order to increase the (current * lifetime) product of the gun.
- Detailed designs of Gatling Gun components are underway, some components are being manufactured while others are being tested.
- This program is complementary to high-current polarized gun R&D at Jefferson Laboratory and at MIT, i.e. advances in each of the programs lead to a combined improvement in the eRHIC polarized injector.

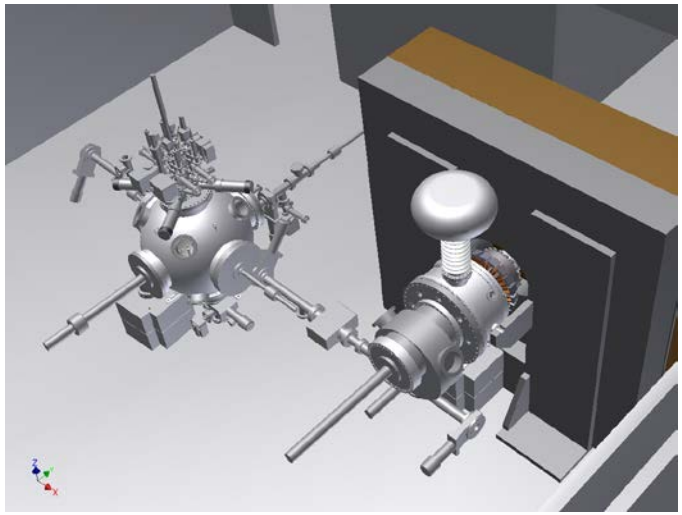

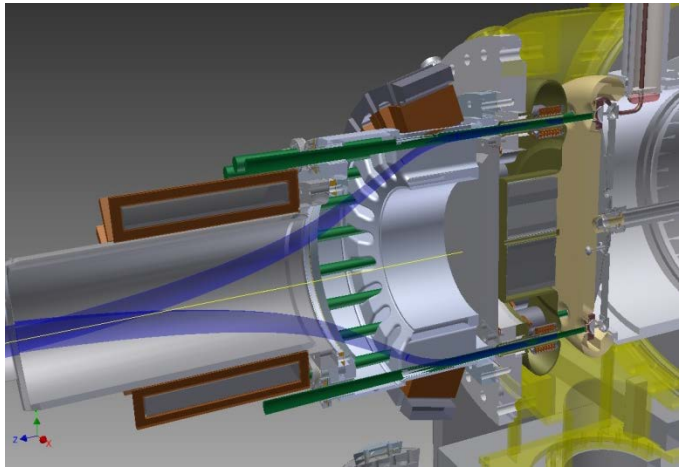

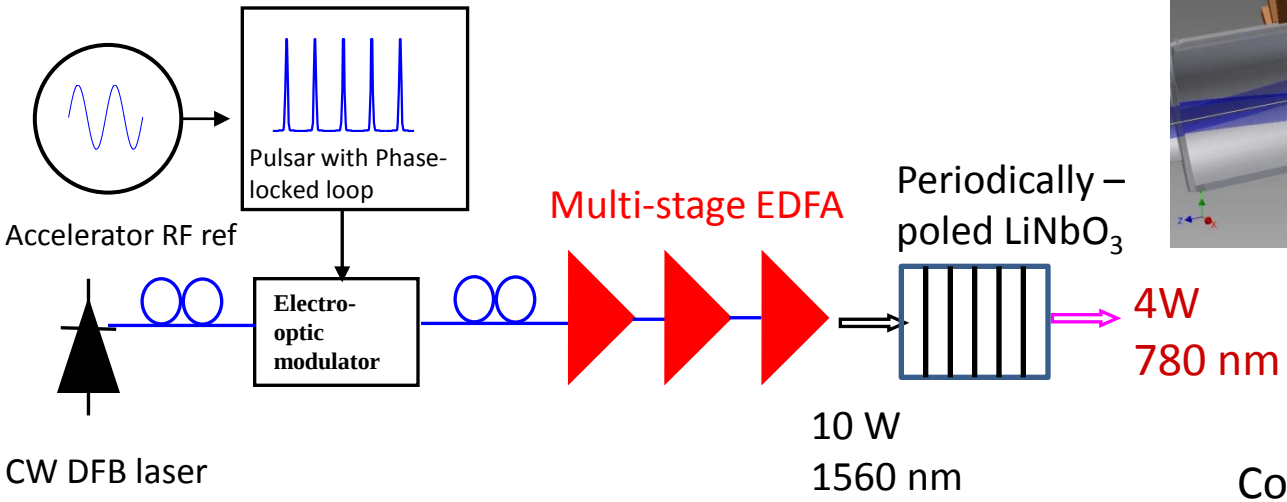

Courtesy of J. Skaritka

Thanks for your attention!

ERL SRF linac tests summary

- HOMs studies were done during all cool downs.
- In CW mode **13 MV/m** is well repeatable and stable. No radiation observed.
- The **22 MV/m** gradient is demonstrated in quasi CW mode operation (3-4 seconds.) CW higher gradient operation is limited by the temperature of thermo- transition near the FPC and the Tuner

SRF Gun Vertical Test results

•Several RF 2K vertical tests were proceeded at JLAB during spring 2010. The cavity (without Cathode) can sustain operation at 23.5 MV/m with dynamic load < 7 Watts. Demonstrated field is enough to accelerate the electrons to 2 MeV.

•In gun mode (with cathode) the maximum field was limitd by multipacting in cathode choke joint.

• The SRF Gun 2 (large grain cavity) Vertical Test with cathode stalk is under preparation at BNL. The test will address multipacting problem .

Courtesy of D. Kayran

Schematic layout

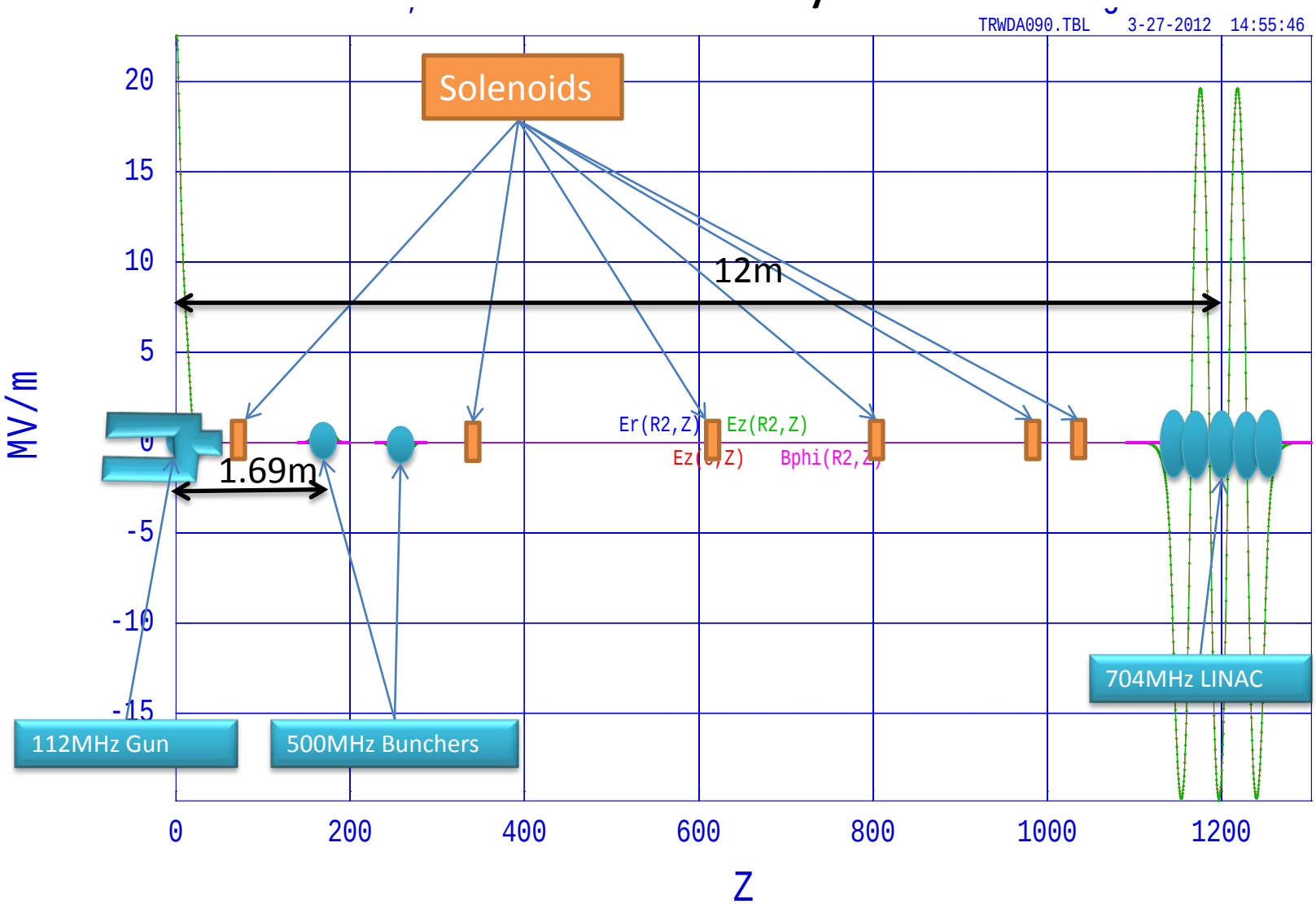

Start from long bunch, then using 2x500MHz cavies and ballistic compression to reach required peak current

Courtesy of D. Kayran

Preliminary Lattice Design

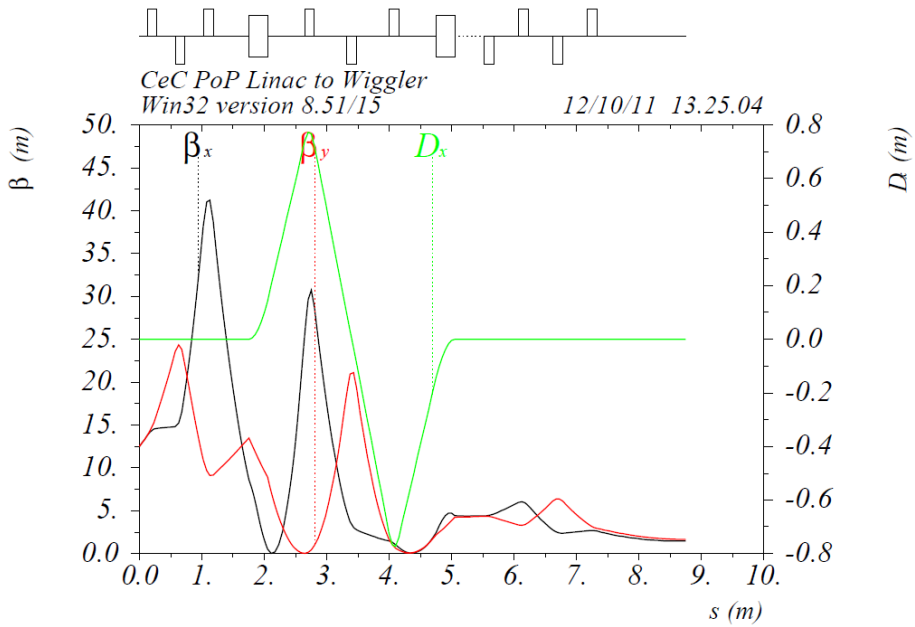

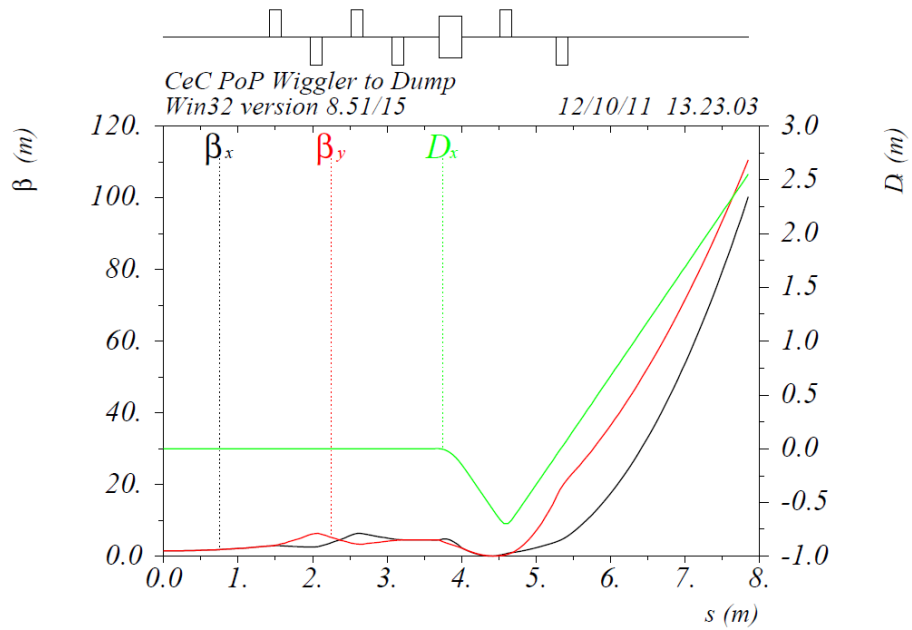

- Triplet after the linac provides matching of the betatron functions
- Three quadrupoles provide zero dispersion at the exit of dogleg
- Quadruplet provides optimum β-functions for modulator and matching into the wiggler
- Second quadruplet provides optimum β-functions for kicker
- Doublet increases beam size in the dump to reduce heat load

Diagnostics

- Two fast current transformers for charge (current and transmission monitoring)
- Emittance measuring system (slits or pepper pot) for low energy beam
- Beam position monitors with Libera Brilliance Single Pass receivers
- Fluorescent flags for 22 MeV beam emittance and energy spread measurements
- Double solenoid system allows beam length and slice emittance measurement
- Infrared port for FEL amplifier tuning
- Wall current monitor for ion beam profile and spectrum monitoring

Modified CeC Dipole (45° bend)

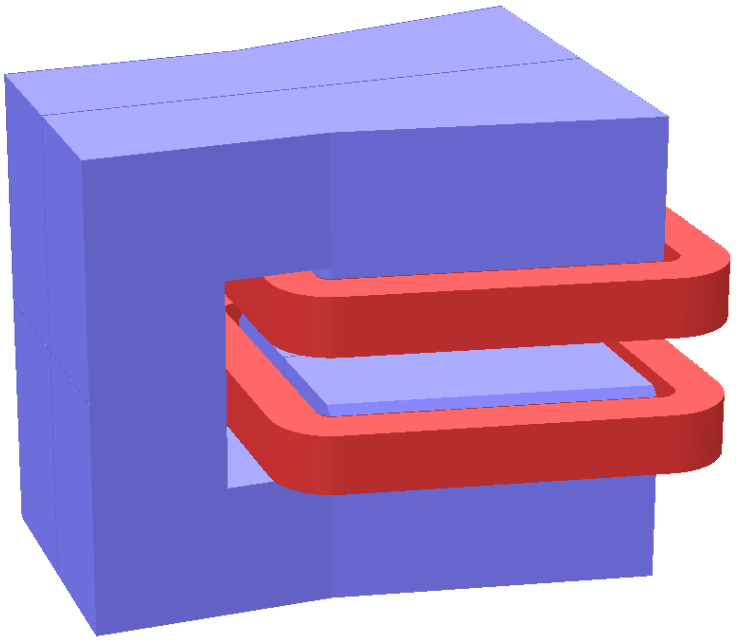

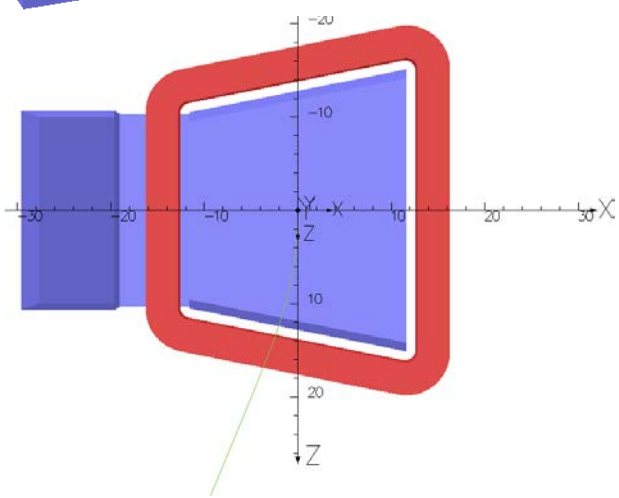

Bo = 1900 Gauss

With current 231.25 A (per turn)

N = 20 (per pole)

Conductor: 7.5 mm squared
3 mm hole
(ERL dipole conductor)

Quadrupoles and solenoids – existing design from ERL
Electromagnetic three-pole wiggler needs to be designed and build

G5 Steering Magnet

Maximum current: 30.13 A-turn per coil
or 60.26 A-turn per leg
or 3.35 A per turn
or 1 A/mm^2 in Cu area
Maximum B ~ 10 Gauss (each set)

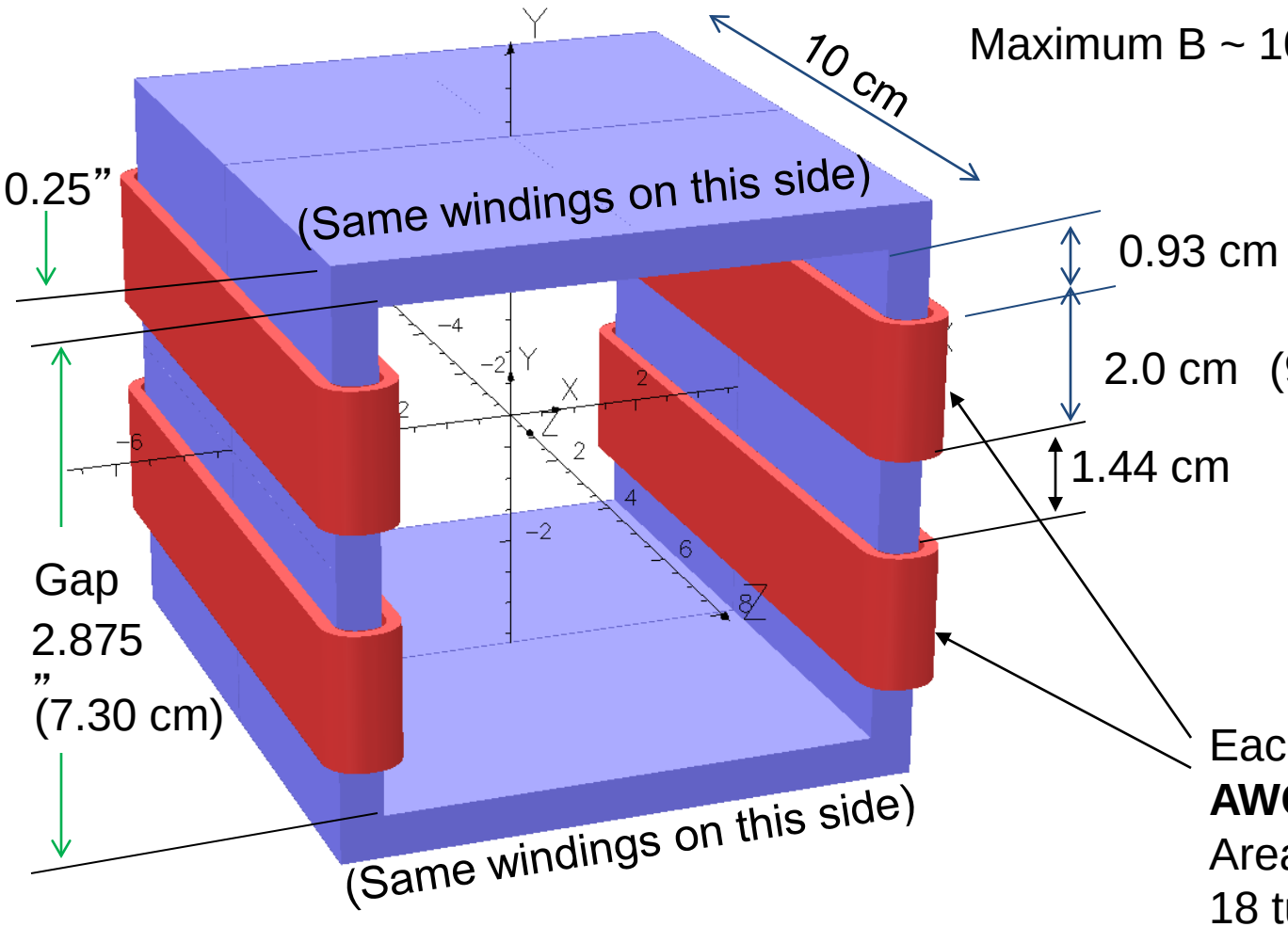

Each coil has 9 turns
AWG-12 wire (cross-section
Area = 0.2 x 2 cm)
18 turns (2 coils) per leg

Magnets

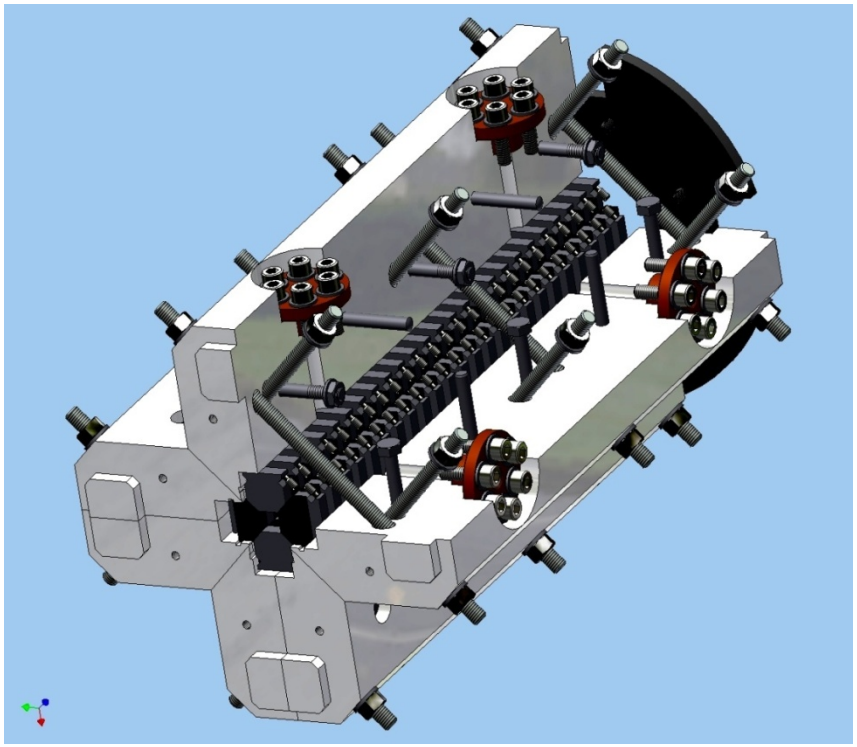

- Helical Wiggler
- Prototype is being developed by BudkerINP under LDRD funding
- Period 4cm
- Peak field 0.4 T
- Length 50 cm
- Schedule
  - Assembly – Nov 30, 2011
  - Magnetic measurement – Aug 31, 2012
  - Shipment to BNL – Dec 25, 2012

Beam Profile

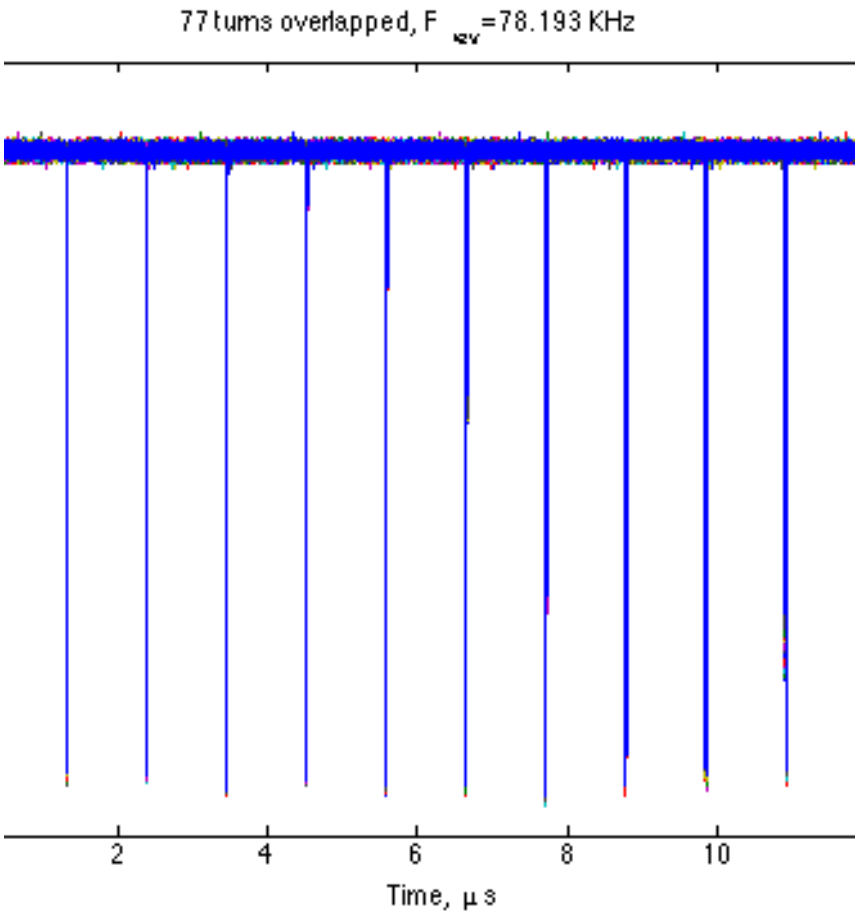

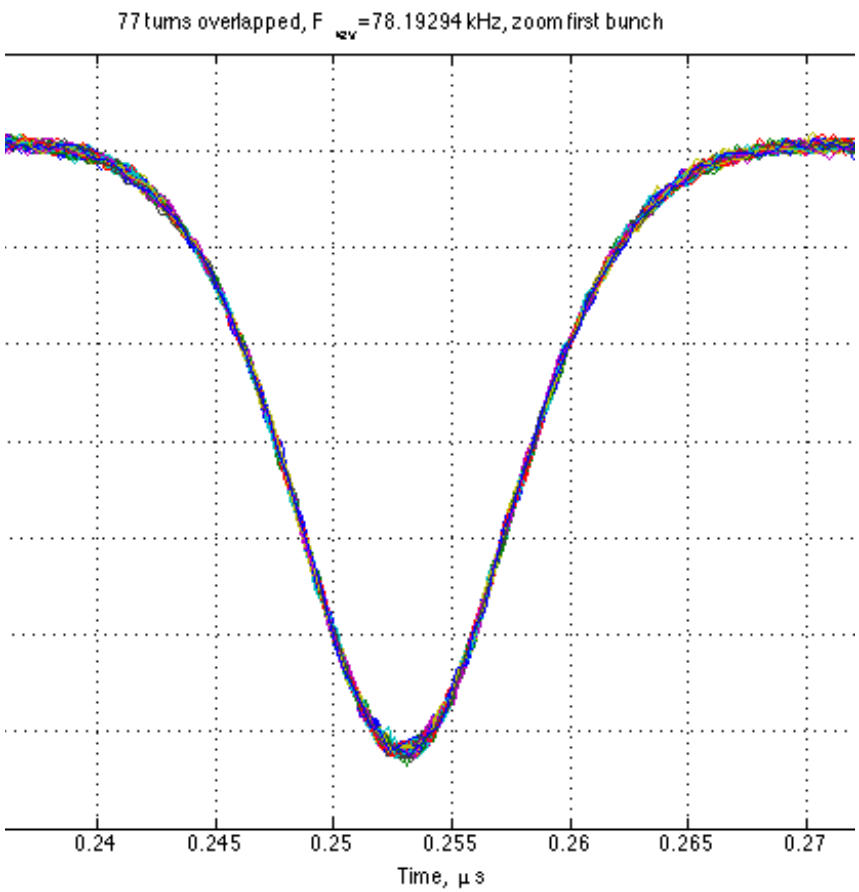

Credits:

Vladimir N. Litvinenko, Sergei Belomestnykh, Ilan Ben-Zvi, Jean C. Brutus, Alexei Fedotov, Yue Hao, Dmitry Kayran, George Mahler, Aljosa Marusic, Wuzheng Meng, Gary McIntyre, Michiko Minty, Vadim Ptitsyn, Igor Pinayev, Triveni Rao, Thomas Roser, Brian Sheehy, Steven Tepikian, Yatming Than, Dejan Trbojevic, Joseph Tuozzolo, Gang Wang, Vitaly Yakimenko (BNL, Upton, New York),

Mathew Poelker, Andrew Hutton, Geoffrey Kraft, Robert Rimmer (JLAB, Newport News, Virginia),

David L. Bruhwiler, Dan T. Abell, Chet Nieter, Vahid Ranjbar, Brian T. Schwartz (Tech-X, Boulder, Colorado),

Pavel Vobly, Mikhail Kholopov, Oleg Shevchenko (Budker Institute of Nuclear Physis, Novosibirsk, 6300090, Russia),

Peter Mcintosh Alan Wheelhouse, (STFC, Daresbury Lab, Daresbury, Warrington, Cheshire, UK,WA4 4AD)

High Power ERL landscape

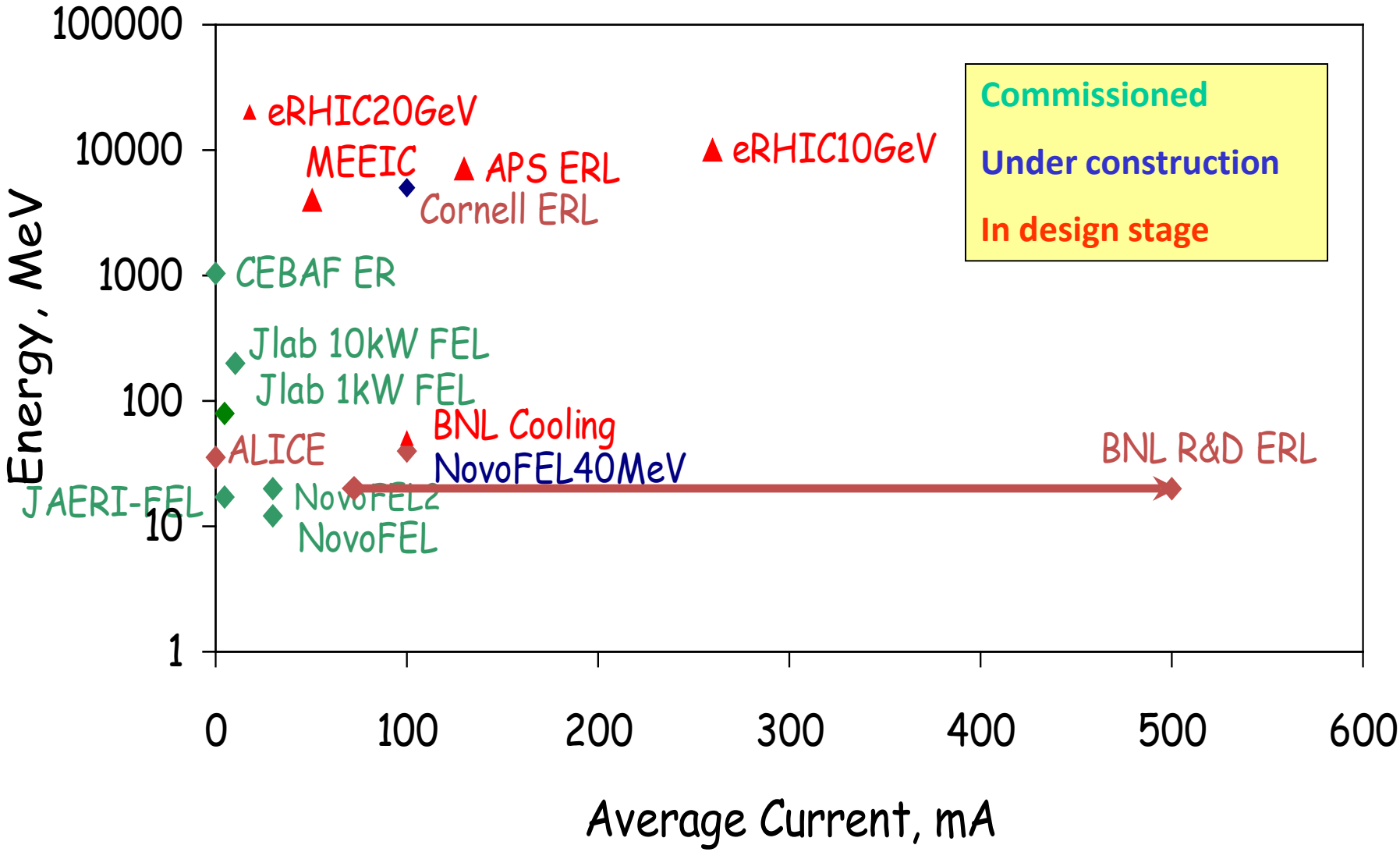

R&D ERL: 5cell SRF Cavity

- 5 cell SRF cavity, 17 cm iris, 24 cm beampipe
- 703.75 MHz, 20 MV/m @ Q_o=1e^{10}
- No trapped HOMs
- Cavity is inherently stiff, so no additional stiffeners are needed
- Coaxial FPC for power delivery
- Ferrite Dampers for HOMs
- 5 K heat intercept on beampipe
- Mechanical Tuner with 100 kHz tuning range, provides 9 kHz fast tuning

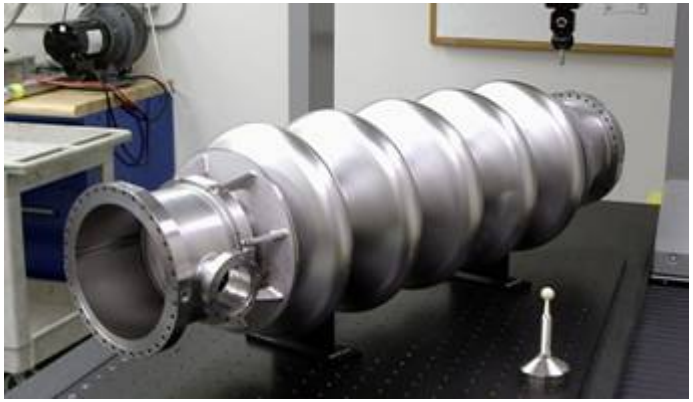

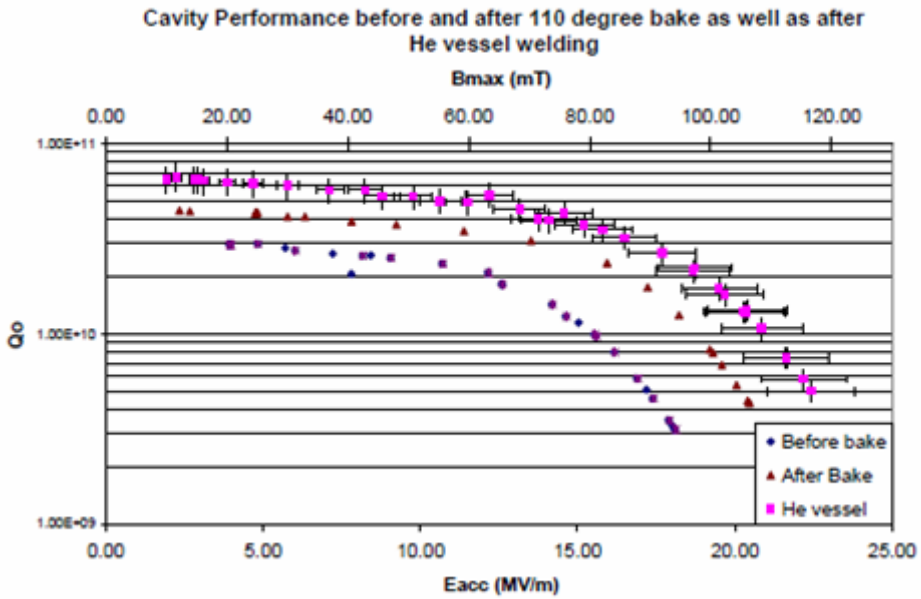

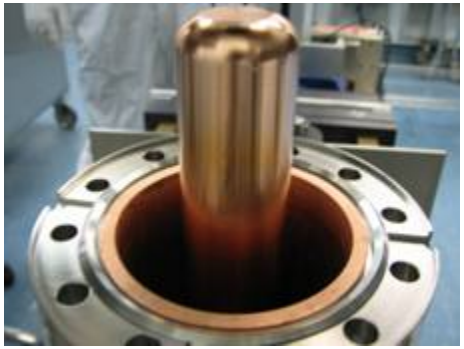

Courtesy of D. Kayran

ERL SRF Injector

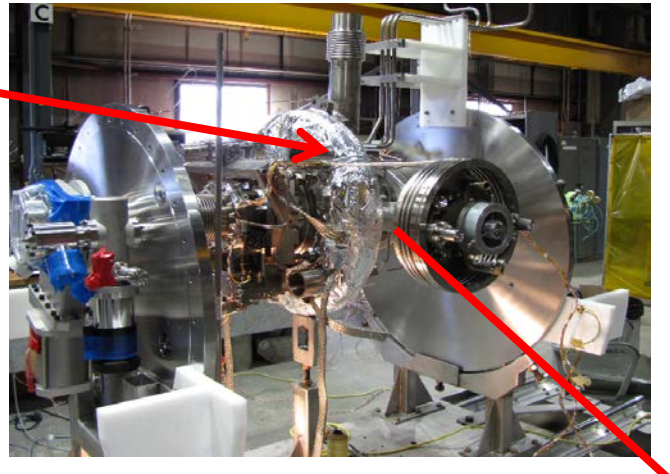

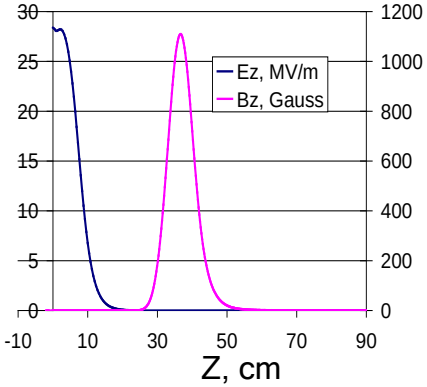

Field distribution

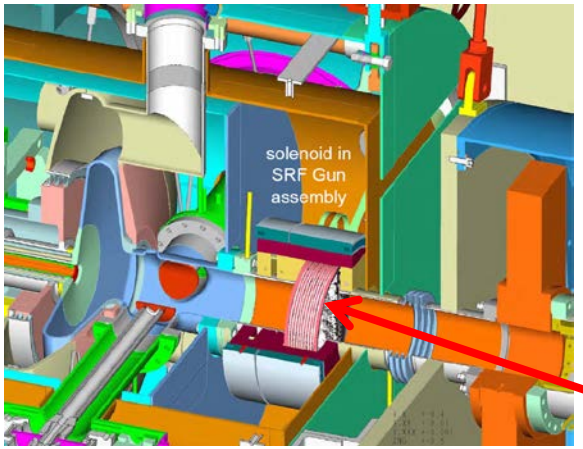

f_{RF}= 703.75 MHz
U=2-2.5 MV

Designed to be able provide average Current: 0.5 A
Has two fundamental power couplers: 0.5 MW each
HTS solenoid installed as close as possible to the cathode

Gatling Gun System Layout

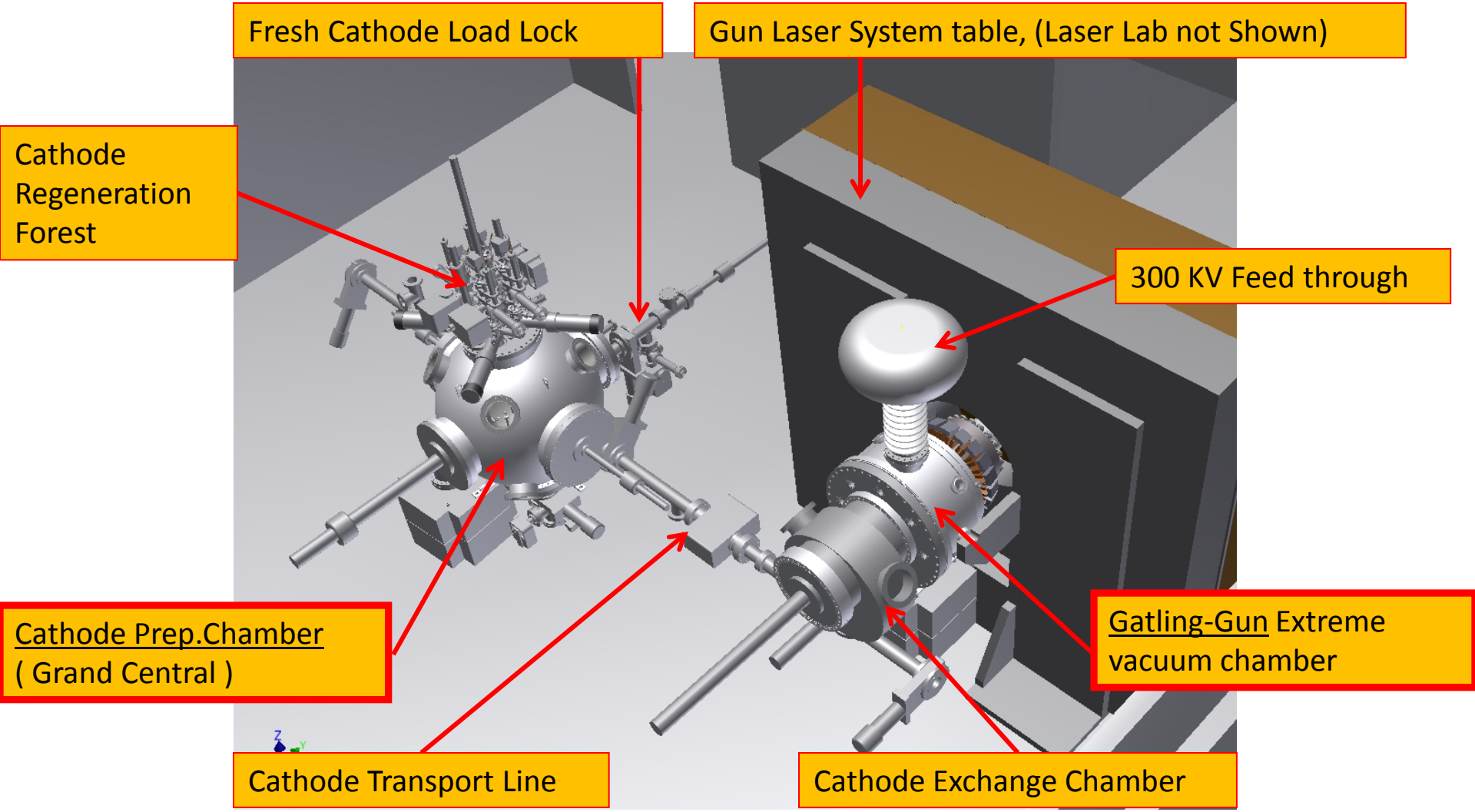

Courtesy of J. Skaritka

The Gatling Gun drive laser

Laser undergoing final testing at Optilab LLC of Phoenix AZ, and Covesion Ltd, of Hampshire, UK. Delivery expected shortly

.

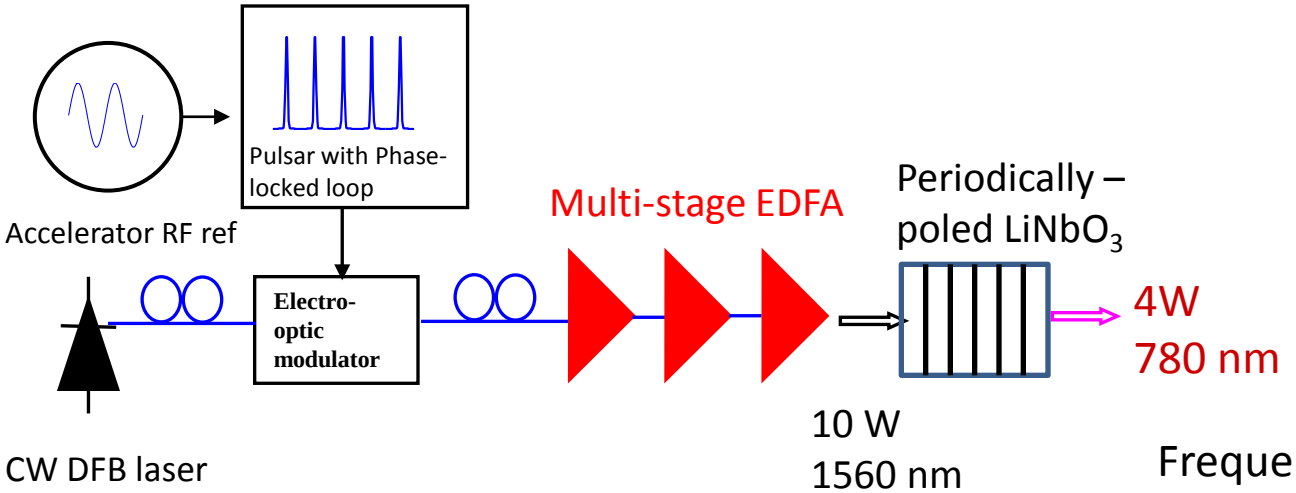

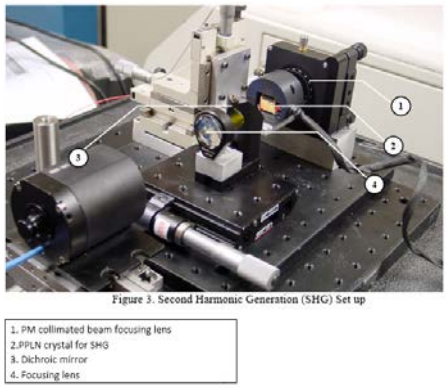

Figure 3. Second Harmonic Generation (SHG) Set up

Frequency doubling module

A 1560 nm laser (CW DFB) is modulated synchronously with a subharmonic of the accelerating RF. After amplification in an Erbium-doped fiber amplifier chain (EDFA), the light is frequency doubled in periodically poled Lithium Niobate. The output will be 4 Watts at 704 kHz (5.4 uJ/pulse), with an adjustable pulse width of 1.2-1.7 nsec.

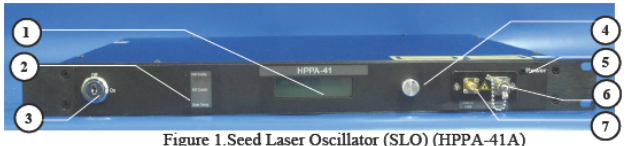

Figure 1.Seed Laser Oscillator (SLO) (HPPA-41A)

1. Main Display	2. Status Indicators	3. Key Switch	4. Knob Button
5. Power Indicator	6. Opt Receptacle panel	7. Data input SMA Connector	

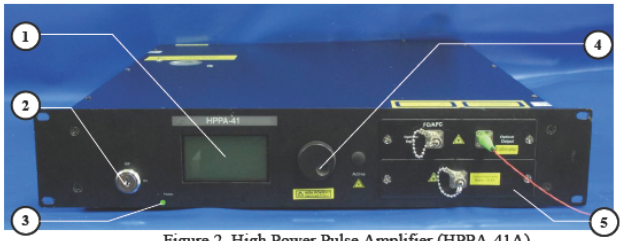

Figure 2. High Power Pulse Amplifier (HPPA-41A)

1. Main Display	2. Key Switch	3. Power Indicator
4. Knob Button	5. Opt Receptacle panel	

Courtesy of J. Skaritka

“Gatling Gun” concept

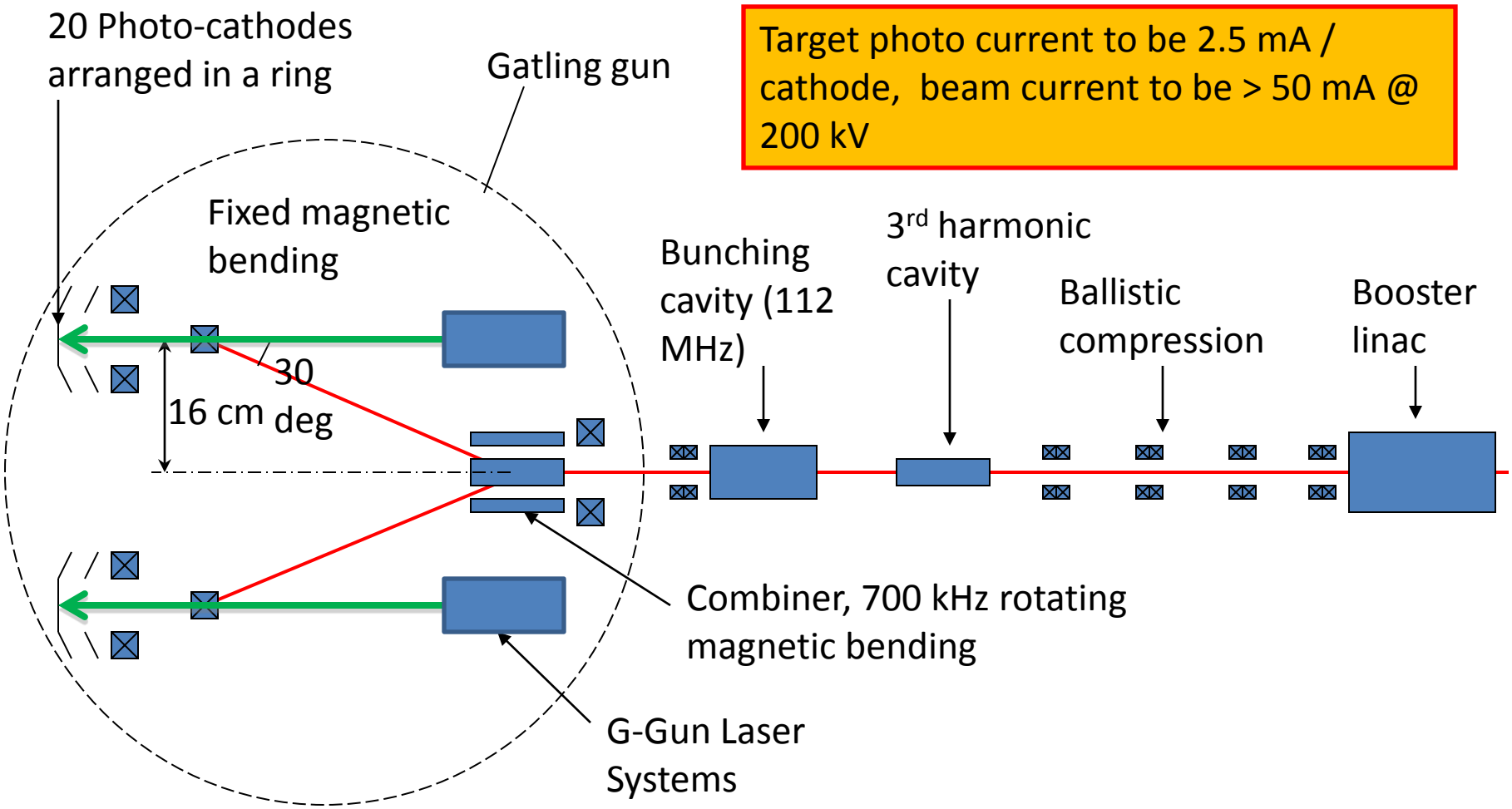

Target photo current to be 2.5 mA / cathode, beam current to be > 50 mA @ 200 kV

Courtesy of J. Skaritka

Energy recovery* linacs (ERLs)

(with the same cavity energy recovery)

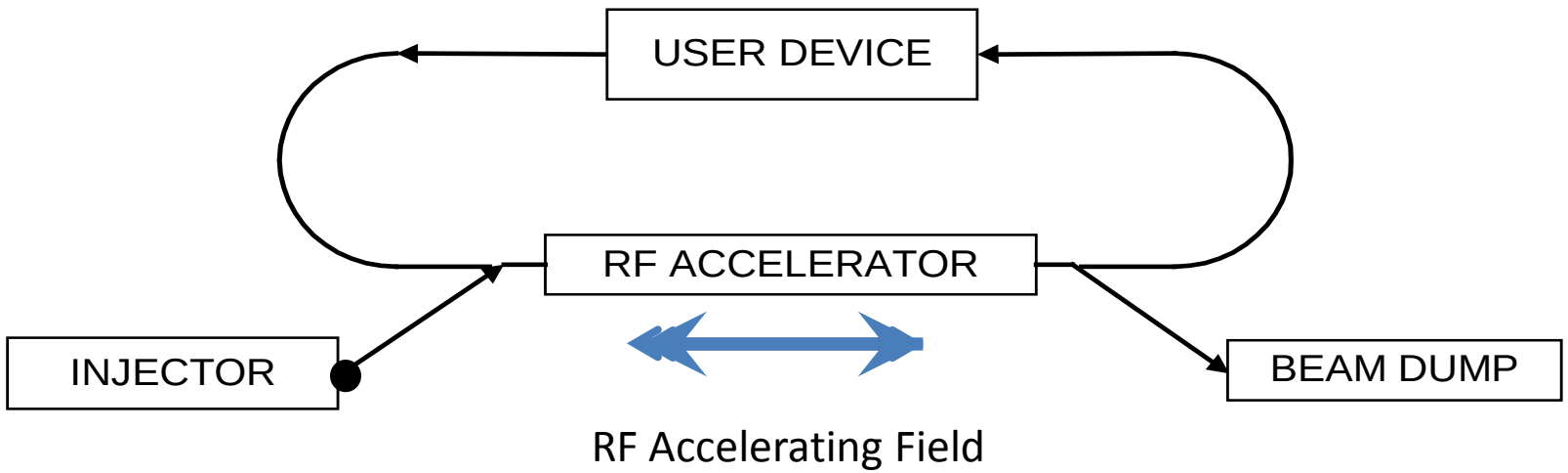

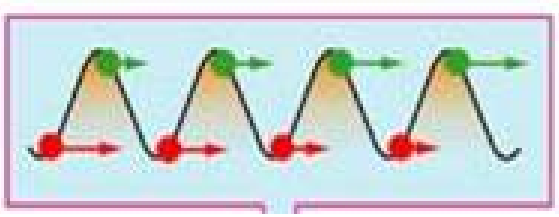

1) Accelerate in 1st pass of RF cavity
2) The return loop is N plus ½ RF wavelengths.
3) Recovery energy in 2nd pass RF cavity

***Energy Recovery** - process by which the energy invested in accelerating particles is returned to the RF cavities by decelerating them, and re-used to accelerate others

Courtesy of D. Kayran