Synthetic non-oxidative glycolysis enables complete carbon conservation

Igor W. Bogorad, Tzu-Shyang Lin & James C. Liao

Nature **502**, 693–697 (31 October 2013) doi:10.1038/nature12575

Yuanheng Cai

C-J Liu's lab

Why I Think You Should Know About This Work

- "This pathway solved one of the most significant limitations in biofuel production and biorefining: losing one-third of carbon from carbohydrate raw materials; this limitation was previously thought to be insurmountable because of the way glycolysis evolved."
- This new synthetic pathway could be used with many kinds of sugars, which in each case have different numbers of carbon atoms per molecule, and no carbon would be wasted.
- This new pathway could be used in biofuel production using photosynthetic microbes

Why I am Interested in This Work

- The pathway has a potential to enable us to use lignocellulosic materials more efficiently.

Glycolysis

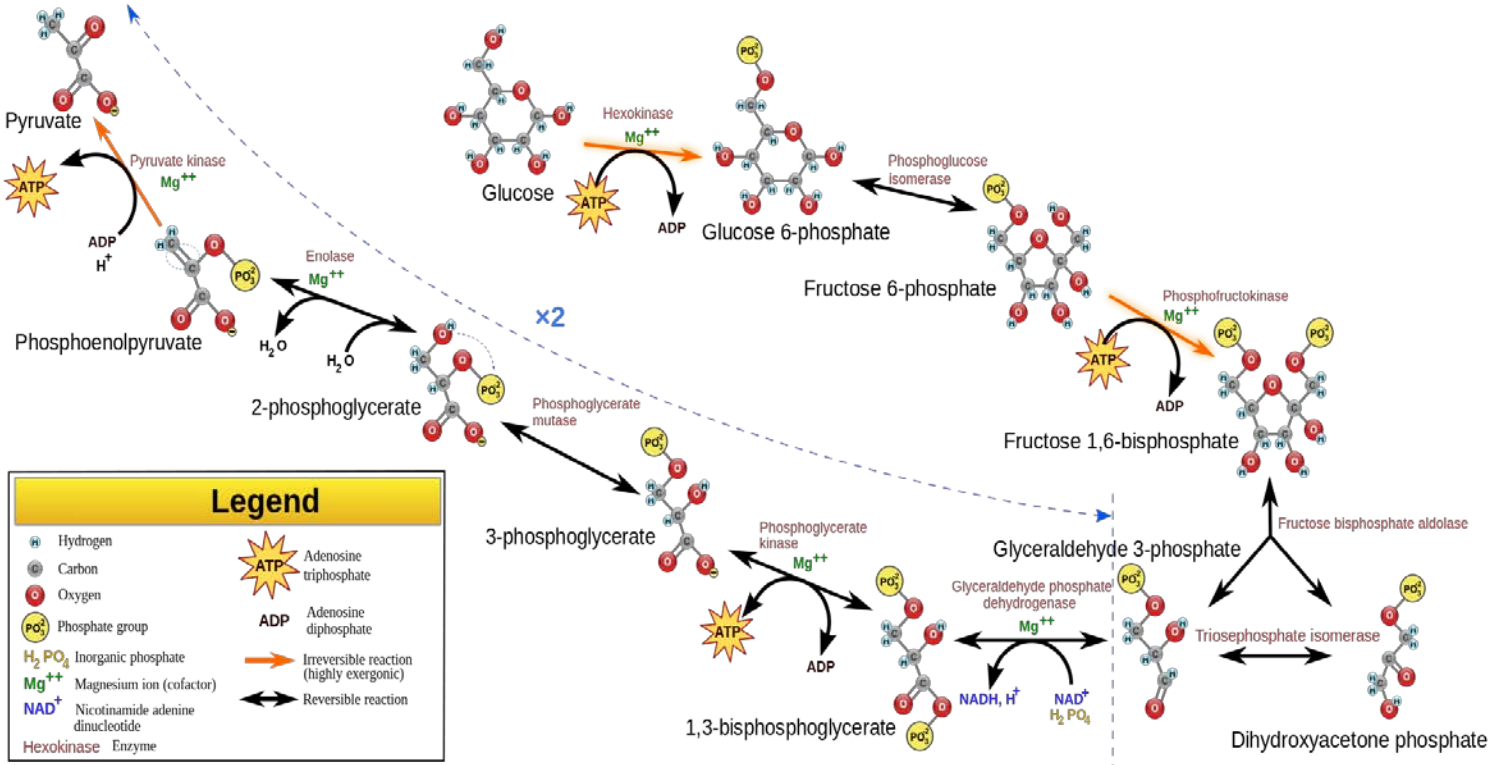

1. Glucose + 2 NAD^+ + 2 ADP + 2 P_i → 2 Pyruvate + 2 NADH + 2 H^+ + 2 ATP + 2 H_2O
2. Glycolysis occurs, with variations, in nearly all organisms, both aerobic and anaerobic.
3. It occurs in the cytosol of the cell

Pyruvate Decarboxylation (aerobic)

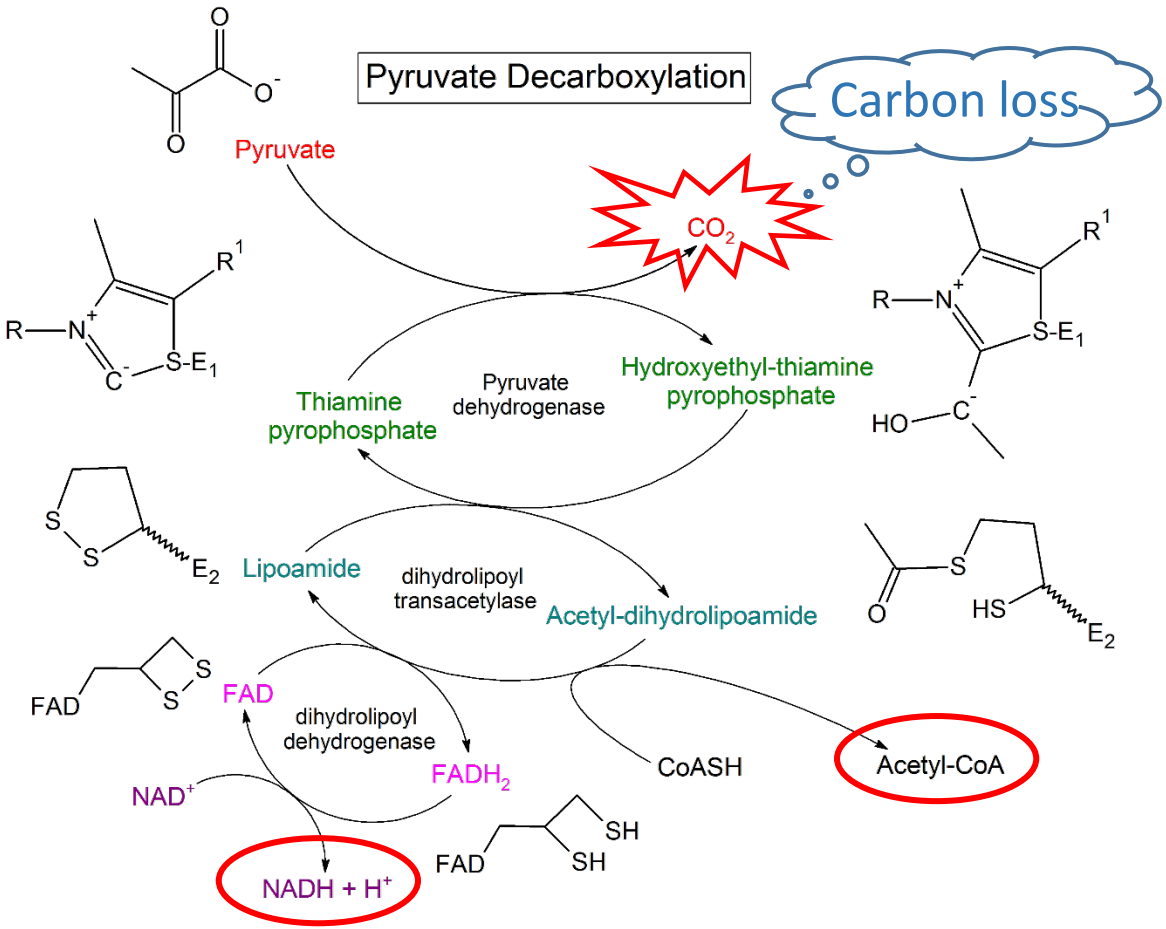

1. By PDC. Produce AcCoA, serving as a link to the TCA cycle. (In mitochondria for eukaryotes or in cytoplasm and plasma membrane for prokaryotes)
2. AcCoA involves in isoprenoids, flavonoids, polyketides and fatty acids biosynthesis
3. AcCoA serves as the building blocks for biorefinery

Structure of oxidative (EMP) and non-oxidative glycolysis (NOG)

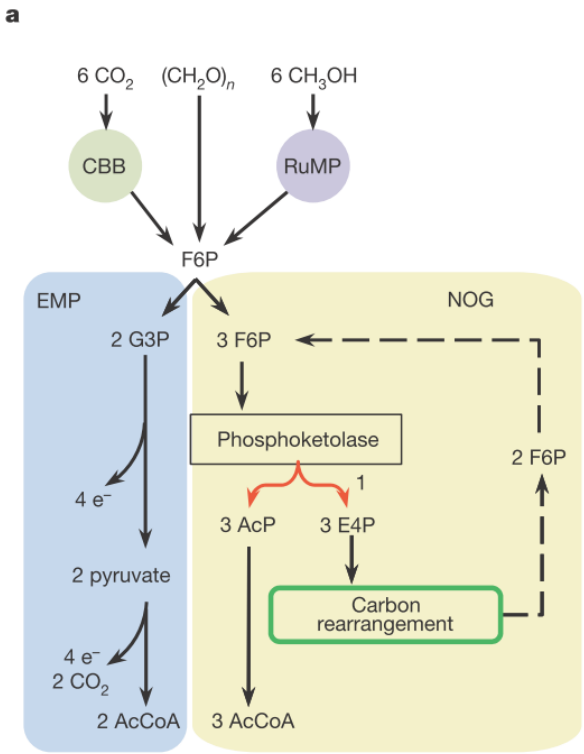

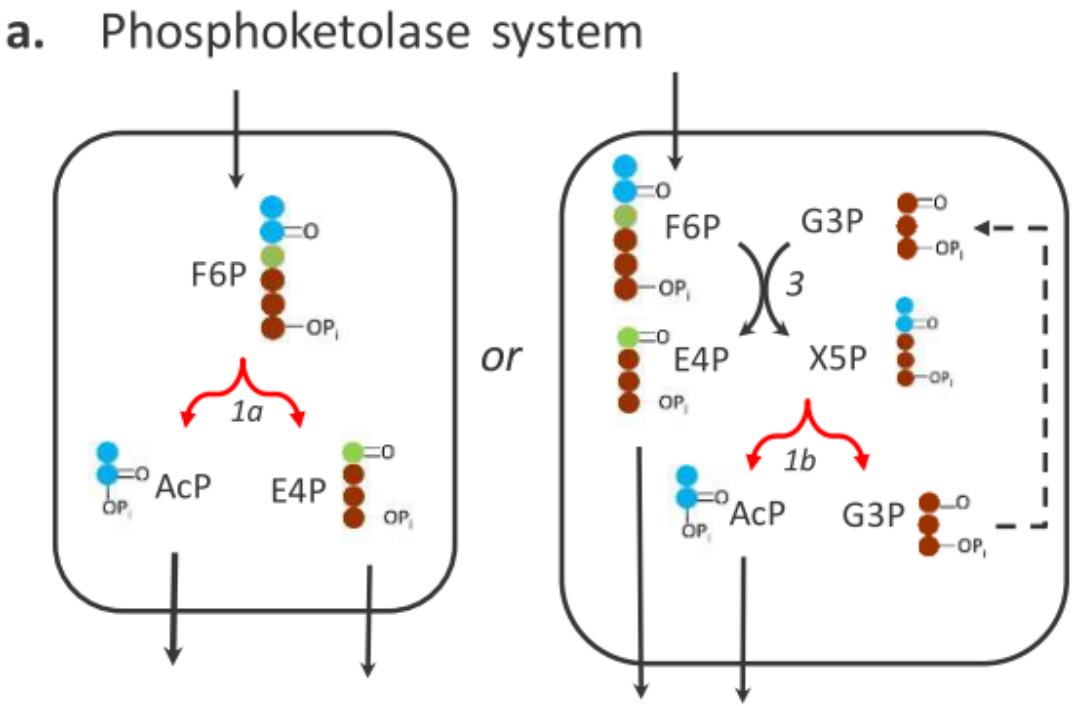

a. F6P as input (2 more F6Ps required)
b. 3F6P→3AcP+3E4P (1. Pkt)
c. 3E4P →2F6P

1a. Phosphoketolase (Fpk);
1b. Phosphoketolase (Xpk)

Carbon rearrangement

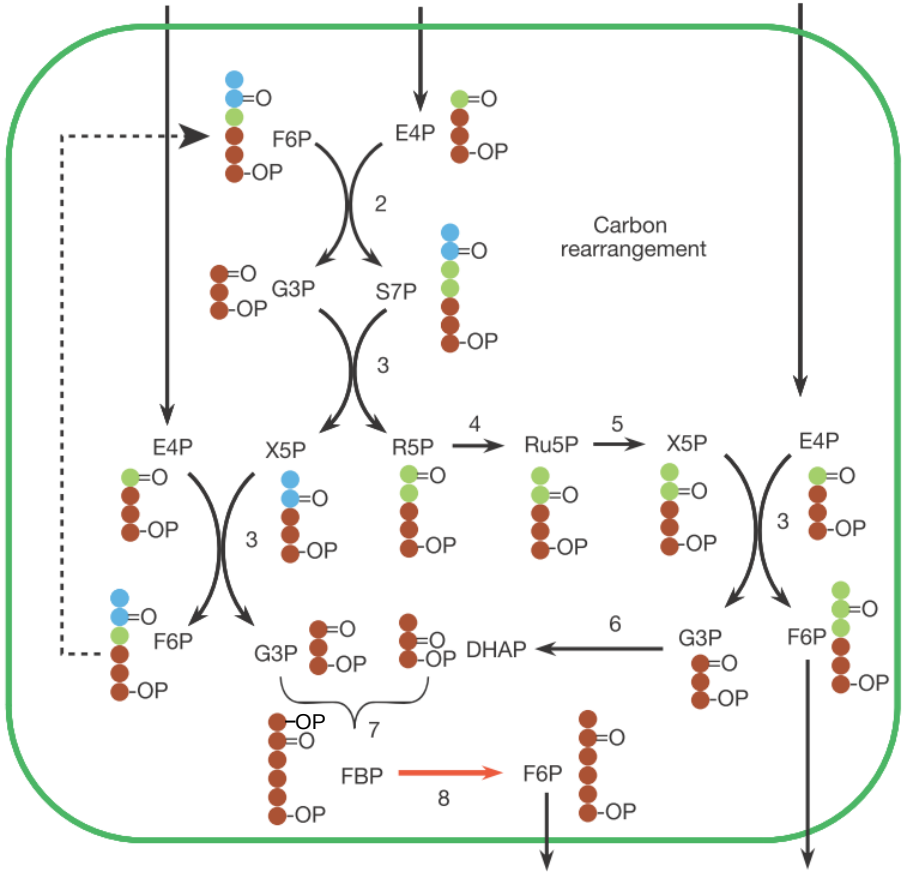

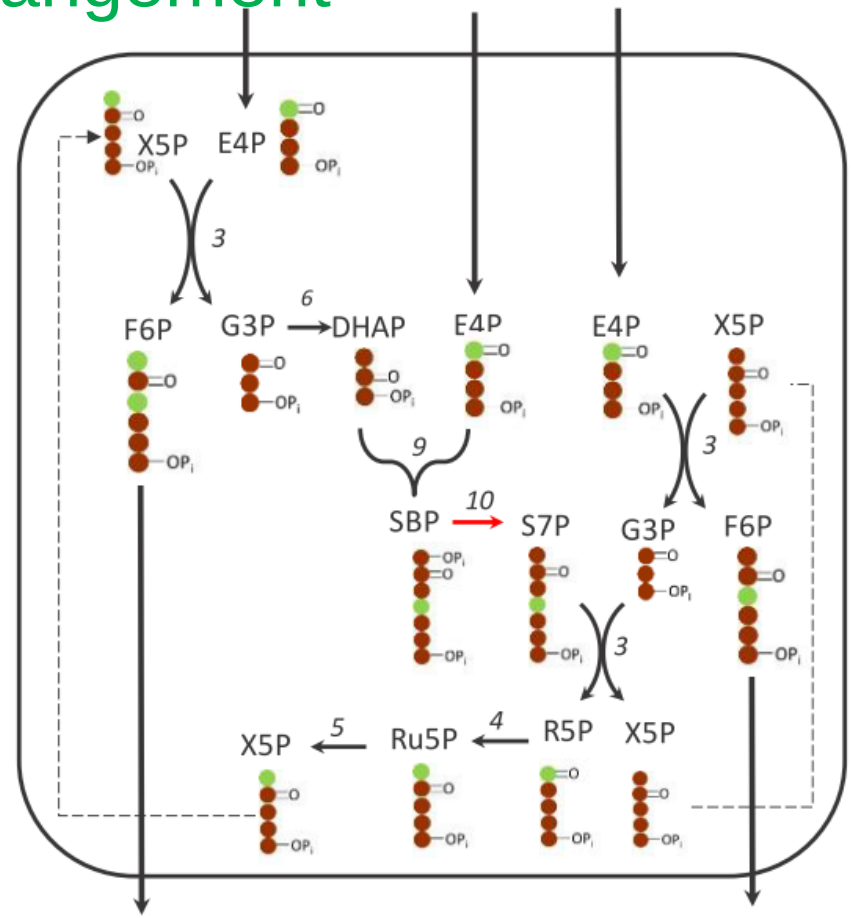

FBP dependent carbon rearrangement :

2. Transaldolase (Tal);
3. Transketolase (Tkt);
4. Ribose-5-phosphate isomerase (Rpi);
5. Ribulose-5-phosphate epimerase (Rpe);
6. Triose phosphate isomerase (Tpi);
7. FBP aldolase (Fba);
8. Fructose 1,6-bisphosphatase (Fbp)

SBP dependent carbon rearrangement:

9. SBP aldolase
10. sedoheptulose-1,7-biphosphotase

Three FBP-dependent NOG networks.

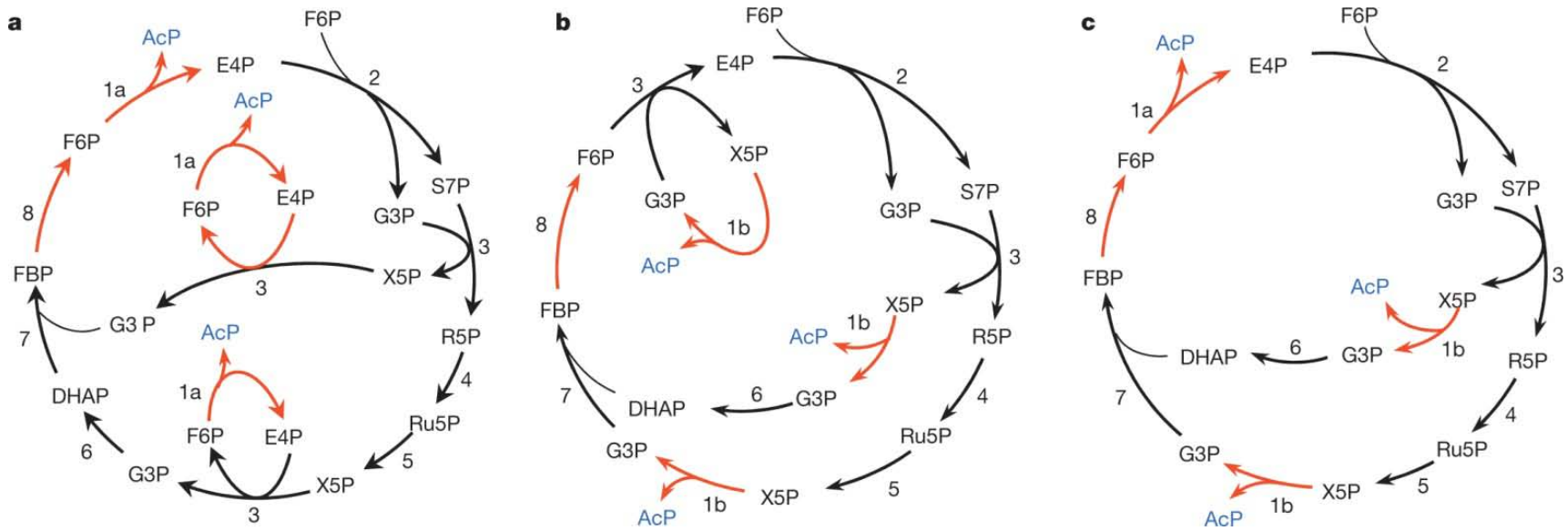

a. NOG using only Fpk;
b. NOG using only Xpk;
c. NOG using one Fpk with two Xpk activities but without the use of one type of Tkt reaction.

Pentose and triose sugar phosphate NOG networks

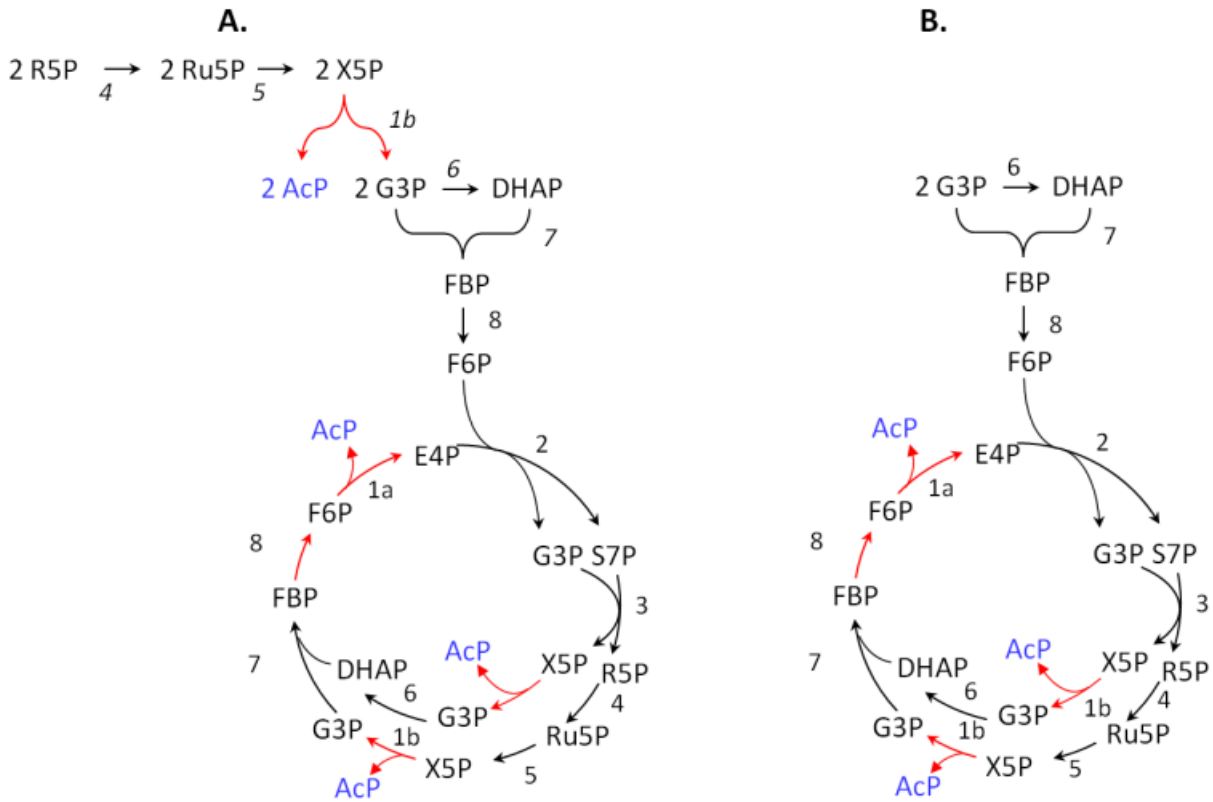

Figure S3. NOG with Pentose and Triose Sugar Phosphates. NOG can take any sugar as input molecules, as long as it can be converted to sugar phosphates that are present in the carbon rearrangement network. The pathways using R5P (A) and G3P (B) are shown. These pathways use F/Xpk dual activity, though similar pathways can be drawn using Fpk only or Xpk only. Carbon rearrangement can convert any sugar phosphate (triose to sedoheptulose) to stoichiometric amounts of F6P. Here the conversion of a ribose and triose are illustrated. Abbreviations and enzyme numbers are defined in Figure 1 legend.

In vitro NOG-expression of NOG enzymes(FBP dependent)

Theoretical Size of Purified Enzymes	
	kDa
Rpe	24.5
Rpi	22.9
Tkt	72.2
Tal	35.2
Ack	43.3
Fpk	94.9
Fbp	37

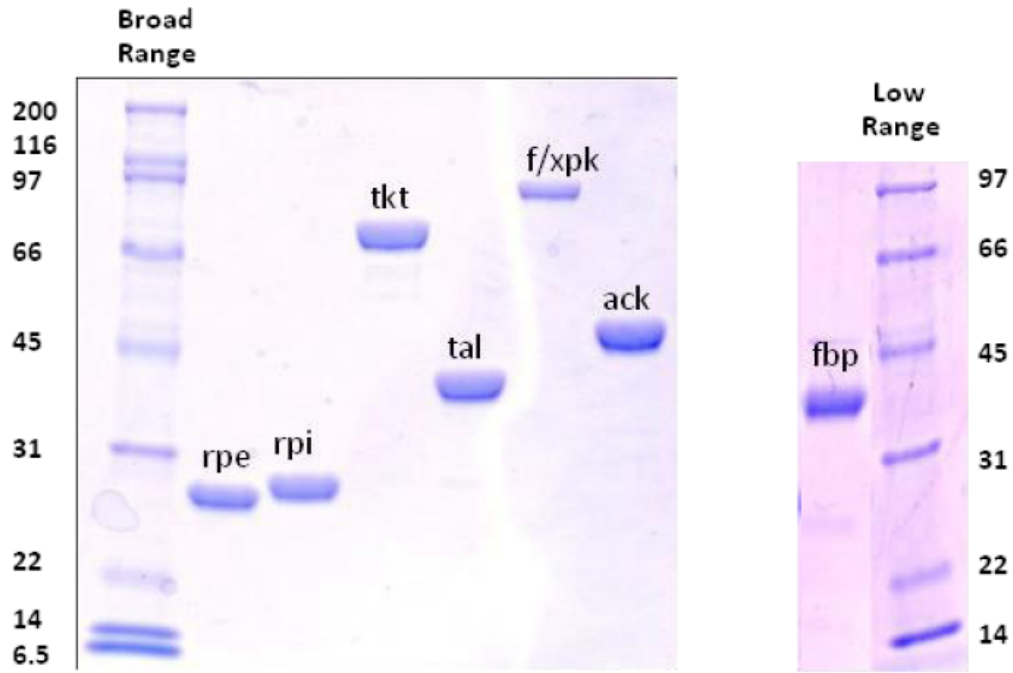

Figure S4: SDS-PAGE of HIS-tagged NOG proteins. SDS-PAGE denaturing gels of purified Rpe, Rpi, Tkt, Tal, F/Xpk, Ack, and Fbp. Sizes corresponded within theoretical values. These proteins were design with N-terminal polyhistidine tags and crude extracts were purified using a one-step affinity chromatography procedure.

In vitro NOG-expression of NOG enzyme activity assay

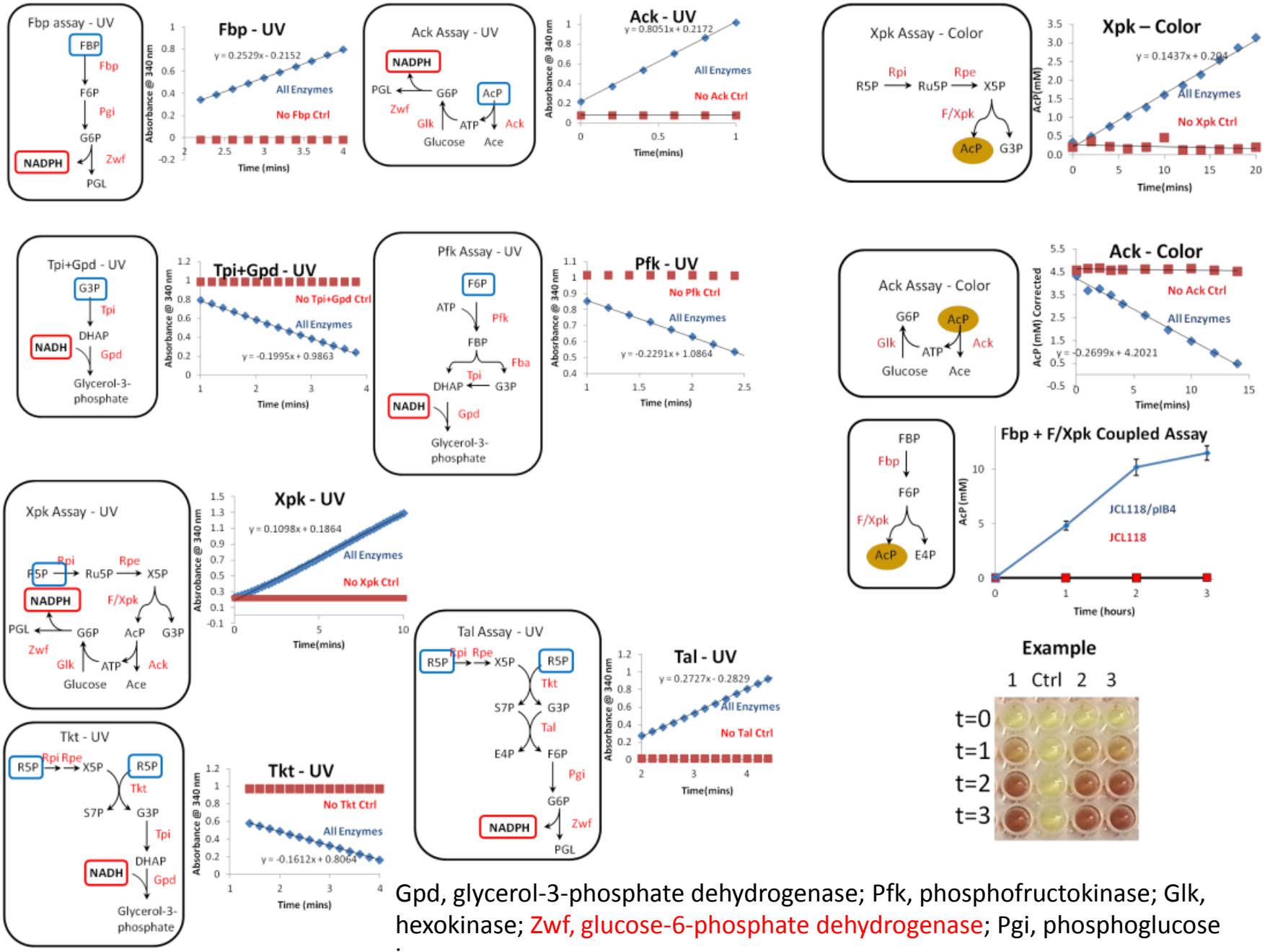

Gpd, glycerol-3-phosphate dehydrogenase; Pfk, phosphofructokinase; Glk, hexokinase; Zwf, glucose-6-phosphate dehydrogenase; Pgi, phosphoglucose

In vitro NOG-total activity

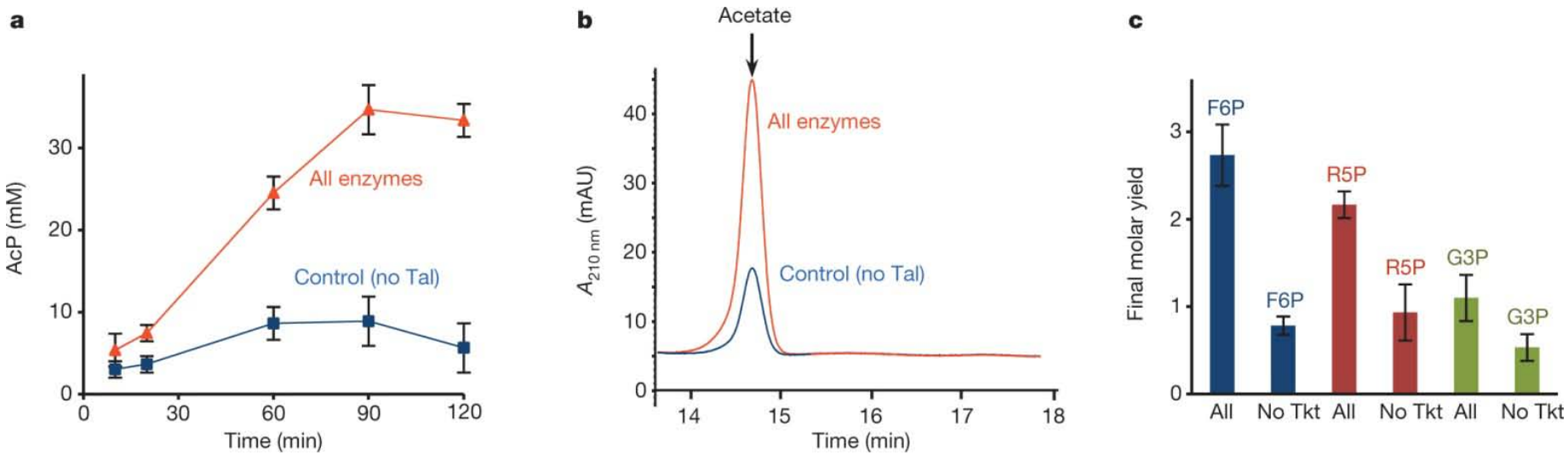

a, In vitro conversion of F6P to AcP using eight purified core enzymes, including F/Xpk, Fbp, Fba, Tkt, Tal, Rpi, Rpe and Tpi. The starting F6P concentration was 10 mM. The red triangles are reactions with all eight enzymes present. The blue squares are reactions with all enzymes except Tal. b, In vitro conversion of F6P to acetate, determined by HPLC. The addition of Ack and Pfk allowed the complete conversion of AcP to acetate. Acetate was monitored at 210 nm (A 210 nm). c, Conversion of three sugar phosphates—F6P, R5P and G3P—to near stoichiometric amounts of AcP. 10 mM of each substrate was converted to AcP using the same core enzymes (denoted 'all'), whereas 'no Tkt' controls produced much less. In vitro enzyme assays were independently performed in triplicates and error bars indicatestandard deviation (s.d.).

In vivo conversion of xylose to acetate using NOG

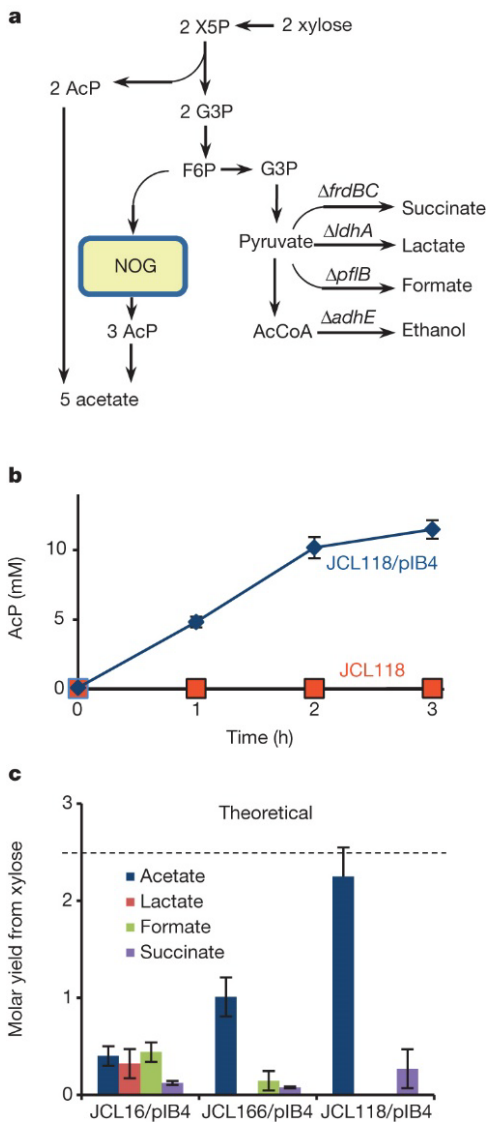

JCL16, WT
JCL166, Δ*ldhA*, Δ*adhE* and Δ*frdBC*
JCL118, Δ*ldhA*, Δ*adhE*, Δ*frdBC* and Δ*pflB*

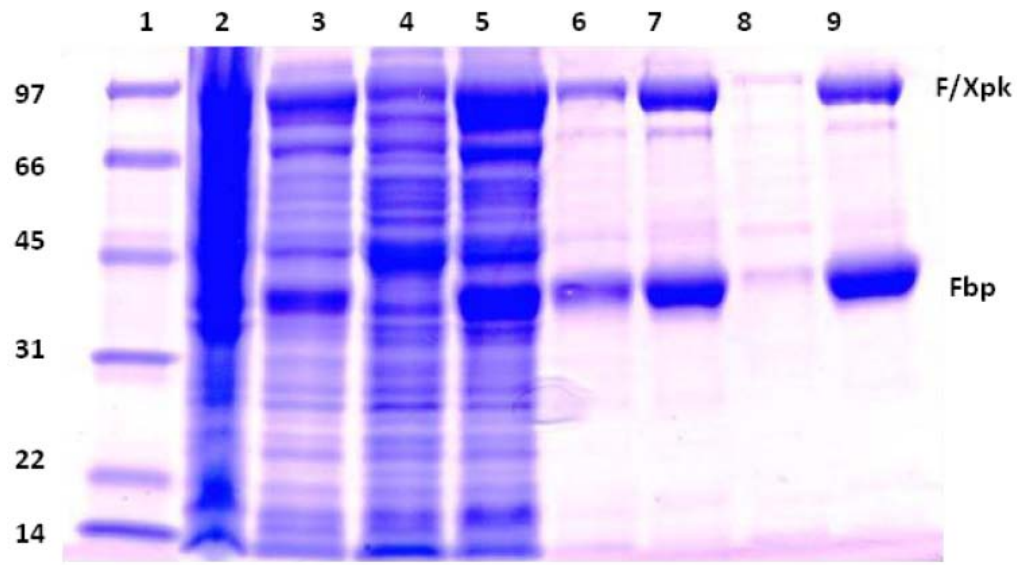

Expression of F/Xpk and Fbp from JCL118 with pIB4.

Figure 4 In vivo conversion of xylose to acetate using NOG.
a, Pathways in E. coli strains (JCL16, JCL166, JCL118) with NOG for converting xylose to acetate and other competing products (lactate, ethanol, succinate and formate production). Plasmid pIB4 was transformed into these strains for the expression of F/Xpk (from *B. adolescentis*) and Fbp (from *E. coli*) under the control of the $P_L lacO_1$ promoter.
b, The expression of Fbp and F/Xpk in JCL118/pIB4 was tested by purifying the crude extract on a His-tag column, and then running a coupled colorimetric assay to test AcP formation. The control was JCL118 (without plasmid), which did not produce AcP.
c, Xylose was converted to acetate and other products under anaerobic conditions. Strain JCL118 (Δ*ldhA*Δ*adhE*Δ*frdBC*Δ*pflB*) produced a near theoretical ratio of acetate/xylose. In vivo production data were independently repeated three separate times from frozen glycerol stocks. Error bars indicate s.d.

Conclusion

- Glucose $\xrightarrow{\text{NOG}}$ 3HAc + 2ATP, no reducing equivalent, not present in nature
- Re-routing glycolysis to NOG in *E.coli* requires

  a. PEP independent PTS-glucose transport system

  b. deleting the lower part of EMP pathway

  c. adapting *E.coli* to new central metabolism system

  d. providing alternative source of reducing power
- When NOG coupled with CBB pathway, it requires less ATP and less Rubisco turnover for each AcCoA produced compared with CBB-EMP pathway (improved efficiency). This could be important if an autotrophic organism was used for the biosynthesis of AcCoA derived products, such as 1-BuOH or fatty acids
- Fundamentally important for carbon management

Thank you