May 2006 Cooling Workshop

RHIC Lattice for Electron Cooling

S. Tepikian,
J. Kewisch, V. Litvinenko,
W. MacKay, T. Roser, D. Trbojevic

RHIC Lattice for Electron Cooling

- Layout Geometries for RHIC modification
  - Two approaches, Global and Local
  - Normal operations at Star (IP6) and Phenix (IP8) must be preserved
  - Must be flexible for future plans such as: eRhic
- Matching Large β^* optics at IP
- Summary

RHIC Lattice for Electron Cooling

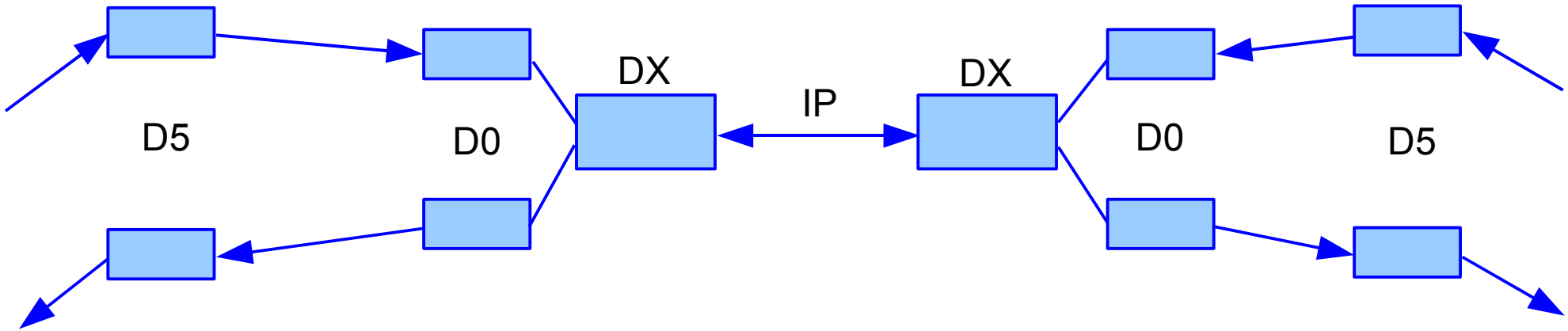

Schematic RHIC IR Layout (not to scale)

- 3+3 identical IR regions
  - *Anti-symmetric layout*
  - *2x9 quadrupoles per IR*
- Up to 4 used for experiments
- β^* varies from 0.8*m* to 10*m*
- 0.0*mrad* crossing angle
- 20.0*m* long IP
- Triplets between D0 and D5

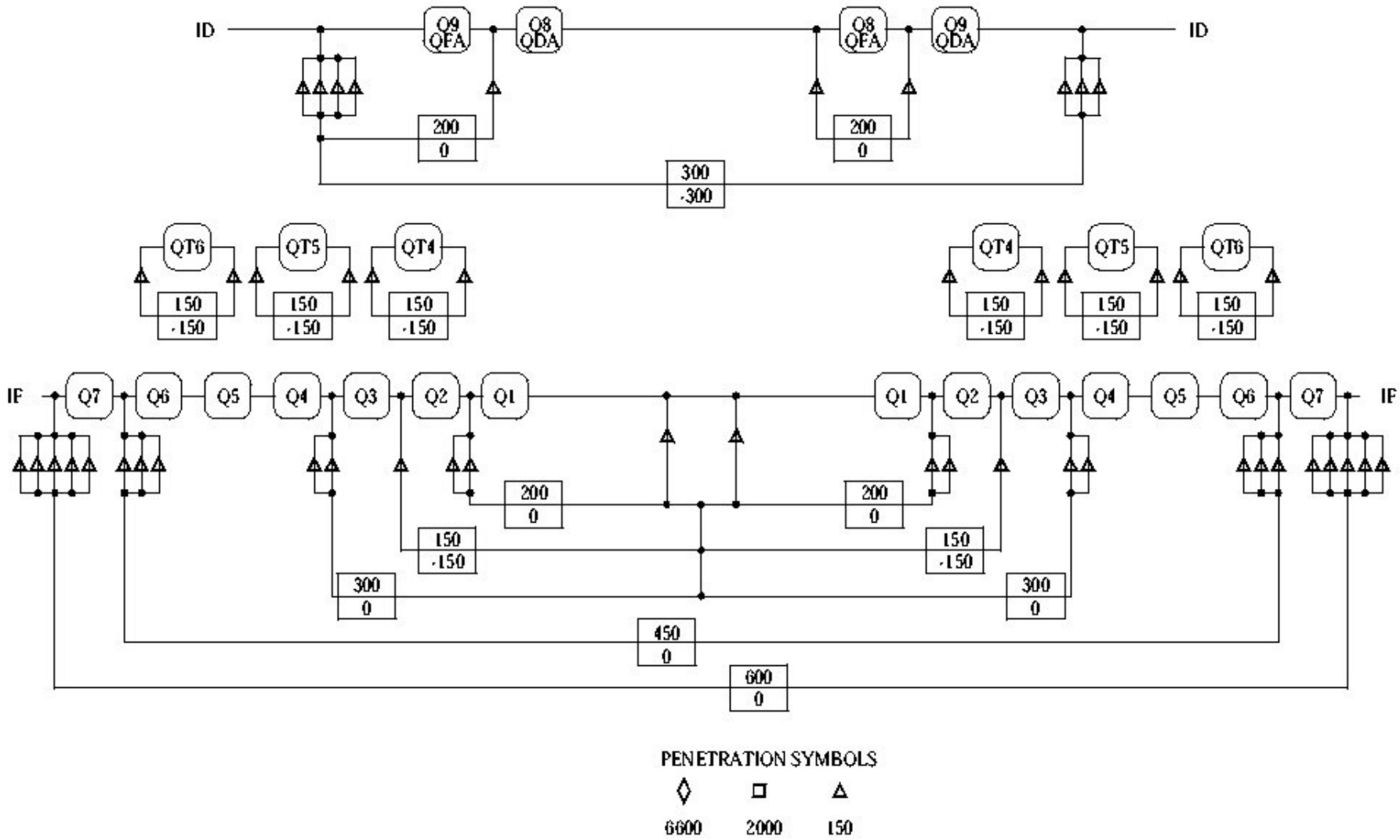
ID
Q9 QFA
Q8 QDA
Q8 QFA
Q9 QDA
ID
200
0
200
0
300
-300
QT6
QT5
QT4
QT4
QT5
QT6
150
-150
IF
Q7
Q6
Q5
Q4
Q3
Q2
Q1
Q1
Q2
Q3
Q4
Q5
Q6
Q7
IF
200
0
200
0
150
-150
150
-150
300
0
300
0
450
0
600
0
PENETRATION SYMBOLS
6600
2000
150

RHIC Lattice for Electron Cooling

T. Roser

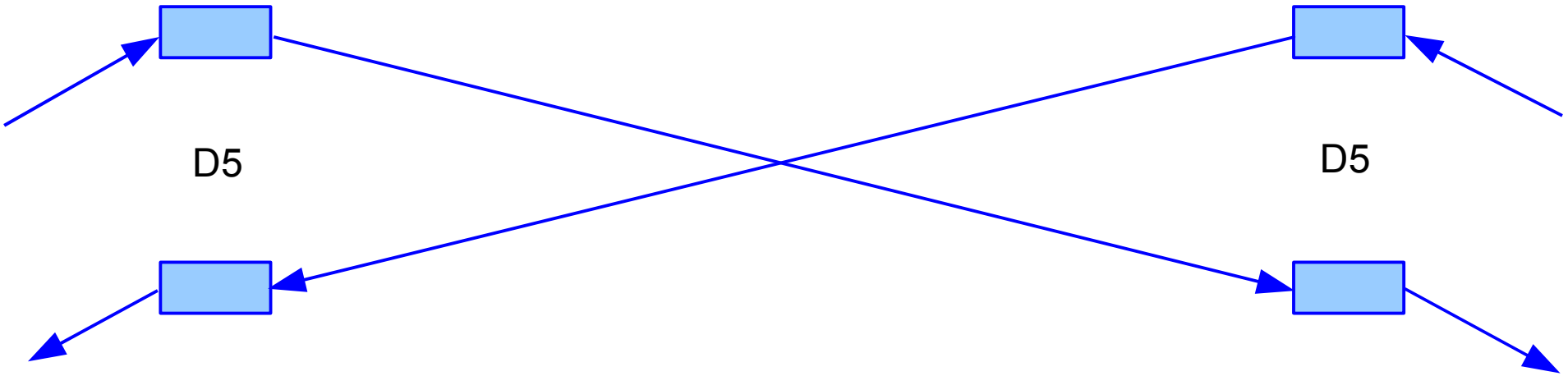

- Removal of the crossing dipoles
  - *10mrad crossing angle*
  - *Change to the current in D5 magnets*
- Vertical separation of the beams
  - *Introduces vertical dispersion in cooling region*

RHIC Lattice for Electron Cooling

W. MacKay

RHIC: Blue and Yellow beams

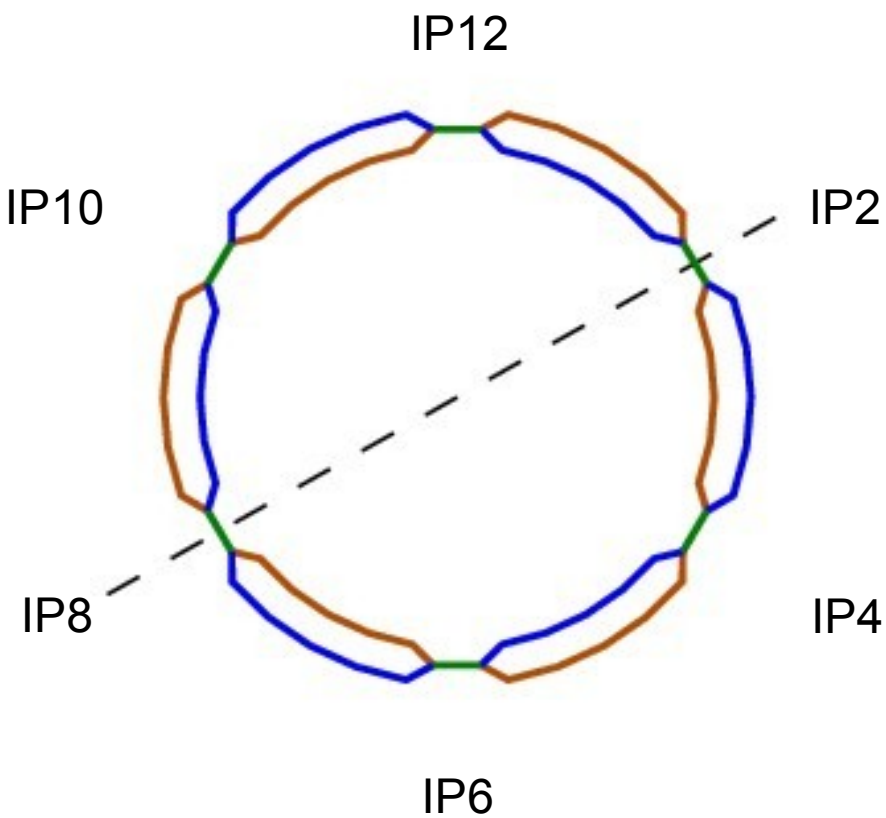

Reversing IP12 and IP4

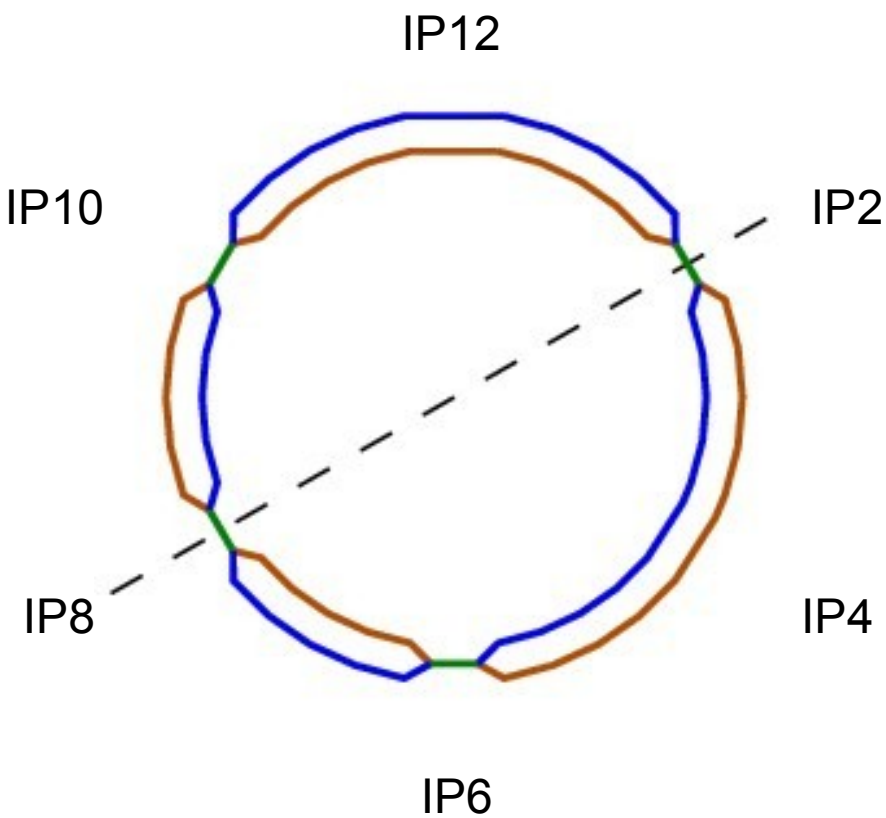

RHIC Lattice for Electron Cooling

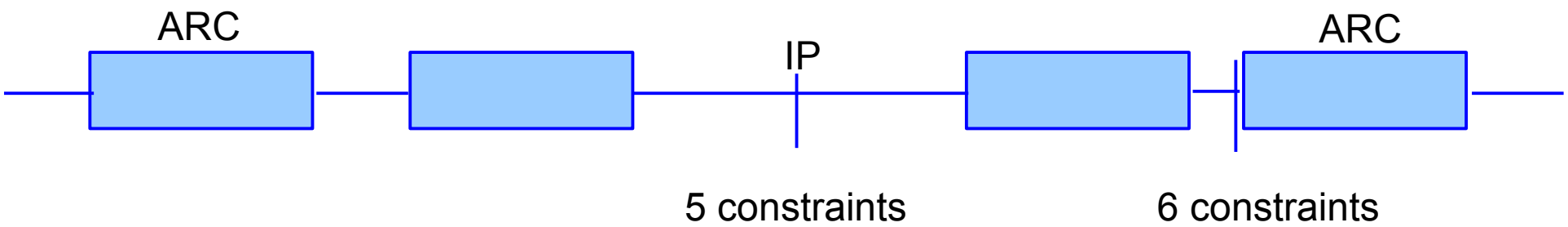

- Constraints at IP for the eCooling
  - Large β^* (~400*m*)
  - Minimize dispersion across the free space (η and η')
  - ~80*m* free space required
- Matching the end of the insertion to the arcs
  - Each RHIC IR can be treated (almost) independently
- Requires sufficient parameters (quadrupole strengths) to vary

RHIC Lattice for Electron Cooling

D. Trbojevic

- Symmetric triplets
- Currents in the quadrupoles exceed power supplies
- Large $\beta^* \approx 400m$ and 110*m free space*

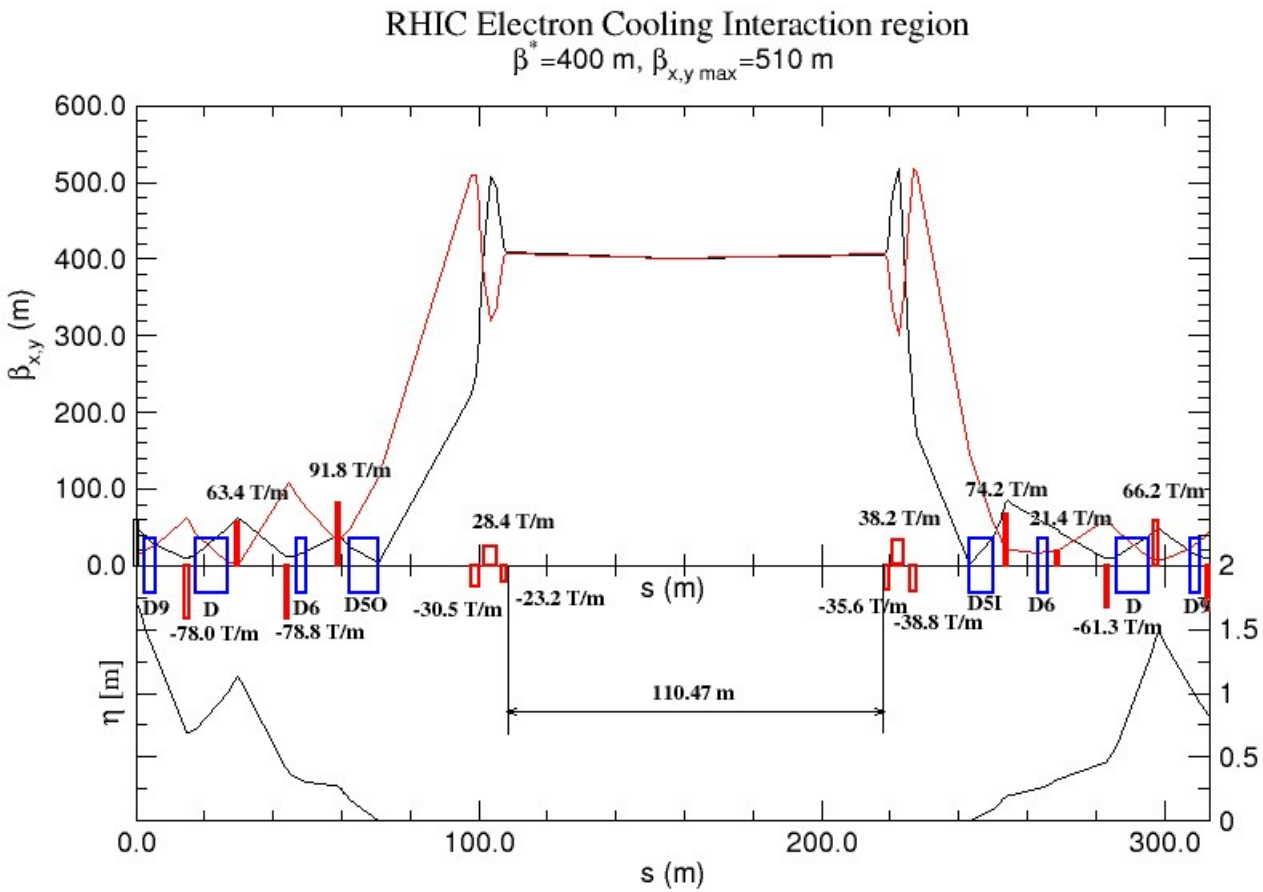

RHIC Lattice for Electron Cooling

Dipole	Length [m]	Angle [mrad]	Change [mrad]	Percent change
D5O	8.698449	35.863893	1.32017	3.6811%
D5I	6.916	28.514816	-1.32017	-4.6298%

From D. Trbojevic Feb 8, 2006, Beta* = 400m

Quad	Grad [T/m]	Strength [m^-2]	Length [m]	Trnsf Func [(T/m)/kA]	Curr [kA]
Q9O	-78	-0.093777	1.11	15.02	-5.19
Q8O	63.4	0.076224	1.11	15.02	4.22
Q7O	-78.8	-0.094739	0.929744	14.91	-5.29
Q6O	91.8	0.110368	1.11	15.02	6.11
Q3O	-30.5	-0.036669	2.100484	9.50	-3.21
Q2O	28.4	0.034144	3.391633	9.50	2.99
Q1O	-23.2	-0.027893	1.44	9.50	-2.44
Q1I	-35.6	-0.042801	1.44	9.50	-3.75
Q2I	38.2	0.045927	3.391633	9.50	4.02
Q3I	-38.8	-0.046648	2.100484	9.50	-4.08
Q6I	74.2	0.089208	1.11	15.02	4.94
Q7I	21.4	0.025728	0.929744	14.91	1.44
Q8I	-61.3	-0.073699	1.11	15.02	-4.08
Q9I	66.2	0.07959	1.11	15.02	4.41

RHIC Lattice for Electron Cooling

- Requires modification to IR
  - *Reuse most of existing magnets to reduce cost*
- Various geometric layouts are proposed
- Solution: $\beta^* = 400m$ with $110m$ physical space
  - *Quadrupole power supply system must be redesigned*
- Allow for future modifications: RHIC II, eRhic, etc.