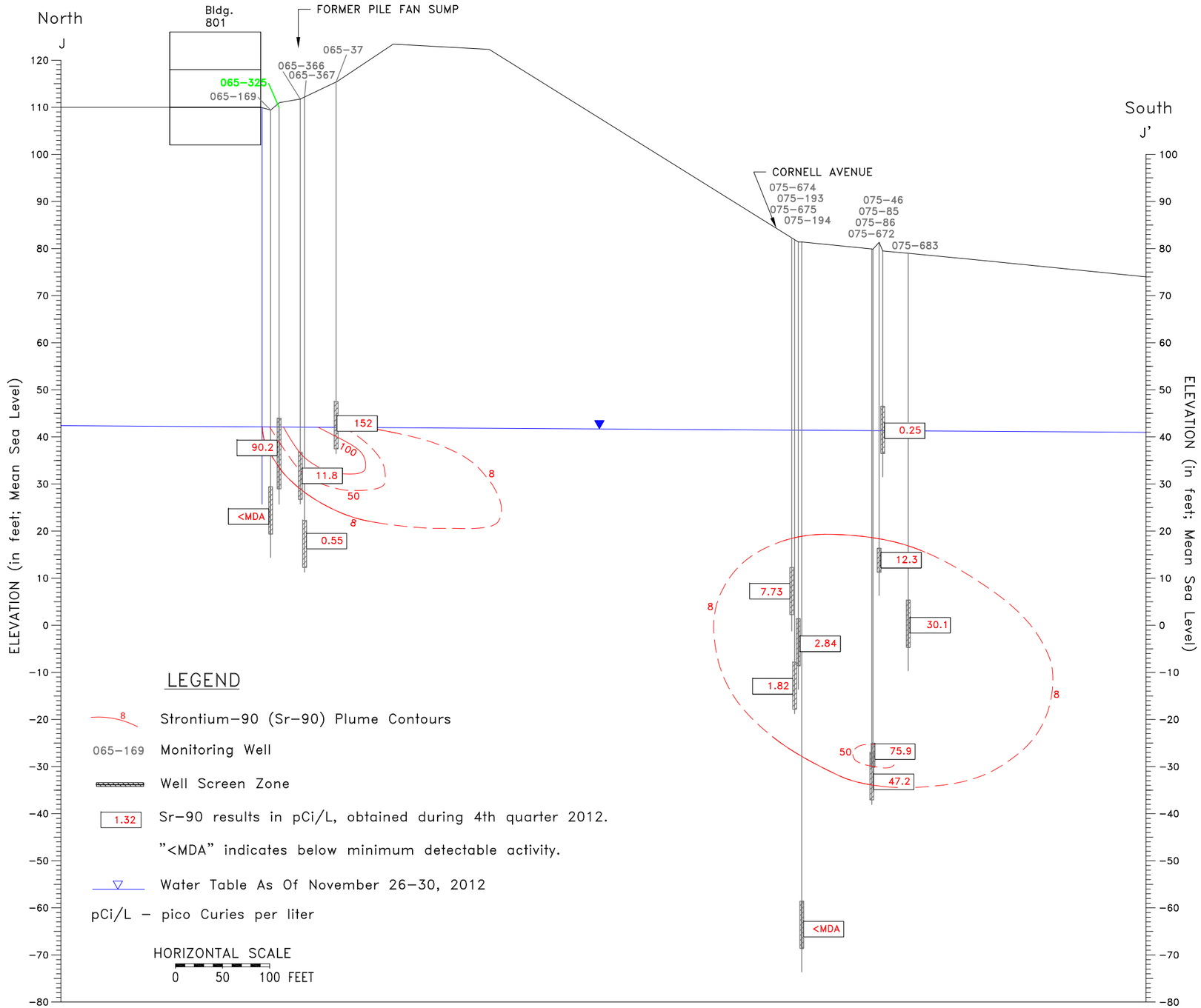

\\DERNT\GIS\GW_PROJECTS\CY_2012_GW_REPORT\FINAL_FIGURES\FIG_3.02.15-03 061213.DWG

BROOKHAVEN NATIONAL LABORATORY

ENVIRONMENTAL PROTECTION DIVISION

TITLE:

OU III BGRR/WCF
Sr-90 CROSS SECTION (J-J')

2012 BNL GROUNDWATER STATUS REPORT

DWN: AJZ	VT:HZ.: 5:1	DATE: 06/12/13	PROJECT NO.: –
CHKD: JEB	APPD: WRD	REV.: –	NOTES: –
FIGURE NO.: 3.2.15-3			