BNL-73107-2004-CP

A Model and Controller Reduction Method for Robust Control Design

M. Yue and R. Schlueter

Presented at the North American Power Symposium
Rolla, MO
October 20-21, 2003

July 2004

Energy Sciences and Technology Department

Brookhaven National Laboratory
P.O. Box 5000
Upton, NY 11973-5000
www.bnl.gov

Managed by
Brookhaven Science Associates, LLC
for the United States Department of Energy under
Contract No. DE-AC02-98CH10886

This is a preprint of a paper intended for publication in a journal or proceedings. Since changes may be made before publication, this preprint is made available with the understanding that it will not be cited or reproduced without the permission of the author.

DISCLAIMER

This report was prepared as an account of work sponsored by an agency of the United States Government. Neither the United States Government nor any agency thereof, nor any of their employees, nor any of their contractors, subcontractors, or their employees, makes any warranty, express or implied, or assumes any legal liability or responsibility for the accuracy, completeness, or any third party's use or the results of such use of any information, apparatus, product, or process disclosed, or represents that its use would not infringe privately owned rights. Reference herein to any specific commercial product, process, or service by trade name, trademark, manufacturer, or otherwise, does not necessarily constitute or imply its endorsement, recommendation, or favoring by the United States Government or any agency thereof or its contractors or subcontractors. The views and opinions of authors expressed herein do not necessarily state or reflect those of the United States Government or any agency thereof.

FOR UNCLASSIFIED, UNLIMITED STI PRODUCTS

Available electronically at:

OSTI:

http://www.osti.gov/bridge

Available for a processing fee to U.S. Department of Energy and its contractors, in paper from:

U.S. Department of Energy
Office of Scientific and Technical Information
P.O. Box 62
Oak Ridge, TN 37831
Phone: (865) 576-8401
Facsimile: (865) 576-5728
E-mail: reports@adonis.osti.gov

National Technical Information Service (NTIS):

Available for sale to the public from:

U.S. Department of Commerce
National Technical Information Service
5285 Port Royal Road
Springfield, VA 22131
Phone: (800) 553-6847
Facsimile: (703) 605-6900
Online ordering: http://www.ntis.gov/ordering.htm

Printed on recycled paper

A Model and Controller Reduction Method for Robust Control Design

Meng Yue, *Member, IEEE*, and Robert Schlueter, *Fellow, IEEE*

***Abstract*—A bifurcation subsystem based model and controller reduction approach is presented. Using this approach a robust μ-synthesis SVC control is designed for interarea oscillation and voltage control based on a small reduced order bifurcation subsystem model of the full system. The control synthesis problem is posed by structured uncertainty modeling and control configuration formulation using the bifurcation subsystem knowledge of the nature of the interarea oscillation caused by a specific uncertainty parameter. Bifurcation subsystem method plays a key role in this paper because it provides (1) a bifurcation parameter for uncertainty modeling; (2) a criterion to reduce the order of the resulting MSVC control; and (3) a low order model for a bifurcation subsystem based SVC (BMSVC) design. The use of the model of the bifurcation subsystem to produce a low order controller simplifies the control design and reduces the computation efforts so significantly that the robust μ-synthesis control can be applied to large system where the computation makes robust control design impractical. The RGA analysis and time simulation show that the reduced BMSVC control design captures the center manifold dynamics and uncertainty structure of the full system model and is capable of stabilizing the full system and achieving satisfactory control performance.**

***Index Terms*—model reduction, bifurcation subsystem method, μ-synthesis, SVC control, RGA analysis**

I. Introduction

MODEL reduction approaches that have been applied to obtain a reduced order model include a singular perturbation method [1], an α-decomposition method [2], slaving principle [3], and center manifold determination [4]. There is no guarantee that the reduced model will preserve the critical dynamics of the full system model by using these methods except center manifold determination, which requires significant computation of nonlinear transformation for relatively large systems such as a power system. A bifurcation subsystem method [5] [6] was proposed and justified to be able to provide a small order subsystem (bifurcation subsystem) that experiences, produces, and causes the bifurcation in full system model. The bifurcation subsystem also preserves the dynamic behaviors and the critical dynamics, the center manifold, of the full system. This suggests that a controller can be designed using the lower order bifurcation subsystem model to stabilize the full system.

Bifurcation subsystem method leads directly to the robust control design by taking the bifurcation parameter as the uncertainty parameter of the system model. Some previous power system robust control designs [7] - [13] were discussed in [14] and are not presented here. Most of them were aimed at increasing the damping only while some of them did not show obvious performance improvement over the conventional power system stabilizer control design. It is noted that a μ-synthesis power system stabilizer (MPSS) was designed in [14] using a systematic bifurcation subsystem based robust control design methodology. Using the same design methodology, a robust μ-synthesis SVC (MSVC) was also designed in [15]. Although both designs achieved tremendous improvement of damping and network voltage control as well as robustness of the closed-loop system, the bifurcation subsystem method was not fully exploited in either [14] or [15] because the MPSS and MSVC were designed using the full system model information. The large size of the power system model and thus the uncertainty model could make such an approach impractical due to the computation required for a robust control on a large system model and the fact that the controller would have an order equal to or higher than that of the power system model. The high order of the controller also makes such controls difficult to implement. One approach is to reduce the order of the model as mentioned above and the other is to reduce the order of the controller without losing the desired control performance. Both procedures are used to obtain the lowest possible order controller.

In this paper, a bifurcation subsystem based model and controller order reduction method is used to design a robust μ-synethsis SVC control. A bifurcation subsystem based μ-synthesis SVC (BMSVC), which is obtained by reducing the BMSVC order using bifurcation subsystem information and a Hankel norm, is applied to the full system model. The RGA analysis and time simulation are given to verify the BMSVC design.

II. Two-area Example System

The two-area system studied in [16] [14] is shown in Fig 1. Two generation and load areas with two generators in each area are interconnected by transmission lines. There are a conventional power system stabilizer (CPSS) at generator 3 (G3) and a conventional SVC control (CSVC) at bus 101, respectively.

The two area power system was also thoroughly studied using bifurcation subsystem method [5] [6] [17] and it has been shown that this example power system is vulnerable to the interarea oscillations caused by various bifurcation parameters and to saddle-node bifurcation under certain situations. It was also concluded in [14] that the CPSS and CSVC were not able to maintain the system stability for relative large change of different bifurcation parameters.

Meng Yue is with Energy Science and Technology Department, Brookhaven National Laboratory, Upton, NY 11973, USA (email: yuemeng@bnl.gov)

Robert Schlueter is with the Department of Electrical and Computer Engineering, Michigan State University, East Lansing, MI 48824, USA, (email: schluete@egr.msu.edu)

*This work was performed under the auspices of the U.S. Department of Energy.

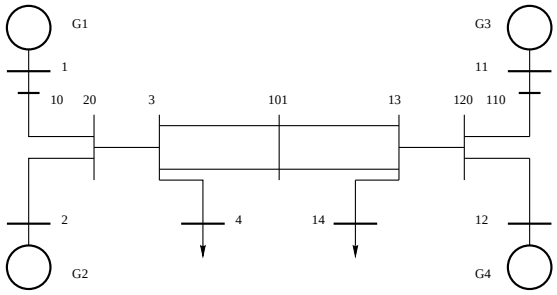

Fig. 1. Diagram of Two-area Example System

For the convenience and consistence of the presentation, the following notations, which were adopted in [14], are described below: $P_{R_i} = P_{m_i}$ and $P_{O_i} = P_{G_i}$,$i = 1, 2, \cdots, 4$, indicate the input power references and active power outputs on generator bus $1, 2, 11, 12$. V_{R_i} and V_{O_i}, $i = 1, 2, \cdots, 5$, indicate the voltage references and measured voltage outputs on generator terminal bus $1,\ 2,\ 11,\ 12$, and SVC bus 101, respectively. $V_{O_i}, i = 6, \cdots, 13$, represents the voltage outputs on other buses $3, 4, 10, 13, 14, 20, 110, 120$. $\omega_i, i = 1, 2, \cdots, 4$, represents the speed on generator bus $1, 2, 11, 12$.

III. Bifurcation Subsystem Based Model and Controller Reduction for a BMSVC Design

Bifurcation subsystem method has been used to guide the controller design and the order reduction of controller that was introduced in [14] [15]. As have been proved the bifurcation subsystem not only experiences, produces, and causes the full system bifurcation, but also provides a lower order model that preserves the dynamic properties of the full nonlinear system at bifurcation frequency [5] [6]. The controller designed based on this reduced order model is expected to be able to stabilize the full system and achieve robustness for the uncertainty parameter (bifurcation parameter) variation in the full system.

The linearization of the full system is represented as:

$$\begin{aligned} \dot{x}_1 &= A_{11}x_1 + A_{12}x_2 + B_1u \\ \dot{x}_2 &= A_{21}x_2 + A_{22}x_2 + B_2u \\ y &= C_1x_1 + C_2x_2 + Du \end{aligned} \tag{1}$$

When a specific bifurcation parameter approaches the bifurcation value, the bifurcation subsystem model of the full system (1) is represented as:

$$\begin{aligned} \dot{x}_1 &= A_{11}x_1 + B_1u \\ y &= C_1x_1 + Du \end{aligned} \tag{2}$$

where x_1 are the states that are involved in the bifurcation subsystem (2). The bifurcation parameter change in the bifurcation subsystem model A_{11} causes the bifurcation of the full system. It has been proved that the center manifold dynamics of the full system (2) lie in or are contained in the nonlinear model associated with the bifurcation subsystem.

An interarea oscillation corresponding to a Hopf bifurcation developed by increasing active load at bus 2 and was studied and stabilized in [14] [15]. The nature of this interarea oscillation was shown to be the oscillation between generator 4 and other generators in this two area power system in [14]. The bifurcation subsystem was obtained using a bifurcation subsystem identification algorithm [18]. In this section, a bifurcation subsystem based model reduction is proposed and a μ-synthesis SVC control is designed for the same bifurcation to provide both interarea oscillation and generator terminal voltage control. By using the same method the BMSVC order can be further reduced.

The detailed fundamental μ-synthesis theory and uncertainty modeling technique can be found in [14] [19] and are not presented here. The structured uncertainty that captures the nonlinear changes of the system matrices in a linear model caused by the bifurcation parameter and leads to less conservativeness in uncertainty representation is used.

The same performance index J and the weighting transfer function $w_p(s)$ as we used in [14] are formulated because exactly the same type of bifurcation (Hopf) and bifurcation subsystem are studied in this paper. The performance index of this μ-controller is defined as:

$$\begin{aligned} J &= \min[\Sigma_{i=1}^{4}(P_{R_i} - P_{O_i}) \\ &+ \Sigma_{i=1}^{5}(V_{R_i} - V_{O_i}) + \Sigma_{i=1}^{3}(\omega_i - \omega_4)] \end{aligned} \tag{3}$$

The first term in (3) indicates the power output control because the electric power carries the frequency information. The second term represents the requirement of voltage output control on the four generators and the SVC bus. The third one reflects the nature of this Hopf bifurcation because the minimization of the frequency deviation between generator 4 and generator 1, 2, and 3 is required.

Following the same procedures for MPSS design in [14], a general control configuration of the bifurcation subsystem based MSVC is shown in Fig 2, where Δ consists of all the uncertainties of system and is in the form of $diag\{\Delta_a, \Delta_b, \Delta_c, \Delta_d\}$, which represents the normalized uncertainty blocks of bifurcation subsystem matrices A_{11}, B_1, C_1, D. $PCK(A_{11_f}, B_{1_f}, C_{1_f}, D_f)$ represents the LFT realization of the bifurcation subsystem and A_{11_f}, $\cdots$, D_f are augmented system matrices. It should be noted that the full system order is 52 and the bifurcation subsystem order is significantly reduced to only 15. This is the largest bifurcation subsystem because it will provide the greatest control design flexibility. This will also greatly reduce the uncertainty complexity. Therefore, K, the controller to be designed, is expected to be synthesized with much less computation. The inputs are the reference signals of the power system. P_{R_i} and EP_i, $i = 1, 2, \cdots, 4$ indicate the mechanical power references and power output errors on generator i, $V_{R_1}, \cdots, V_{R_5}$ and $EV_1, \cdots, EV_5$ are the voltage references and voltage output errors on the four generator buses and SVC bus 101, respectively. ω_4, the speed on generator 4, is the feedback measurement signal. $W_P = diag\{w_p, w_p, \cdots, w_p\}$ is the performance weighting matrix. $w_p(s)$ is the performance weighting function:

$$w_p(s) = \frac{0.1s + 1}{0.01s + 1}$$

The details can be found in [14].

To suppress the interarea oscillations caused by the active power load on bus 2, the speed of generator 4 is selected as

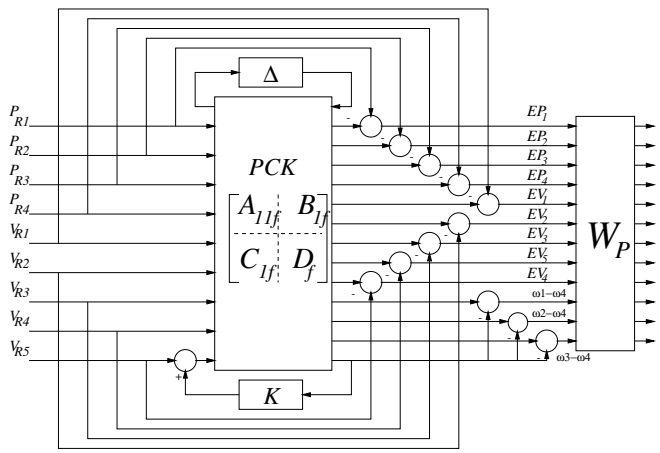

Fig. 2. Control Configuration of BMSVC

the measurement signal and the controller output will go to the sum point of the voltage reference V_{R_5} of SVC bus 101 in Fig 2. The BMSVC is synthesized using μ Analysis and Synthesis Toolbox in Matlab [22] and the closed-loop μ-value around the frequency we are concerned (the bifurcation frequency) is shown in Fig 3. The maximum μ value is about 0.92, which occurs around the interarea oscillation frequency, and thus the robust performance can be guaranteed even with $1/0.92 = 1.08$ times uncertainty. The resulting BMSVC is of the order of 15 and is the same as the bifurcation subsystem.

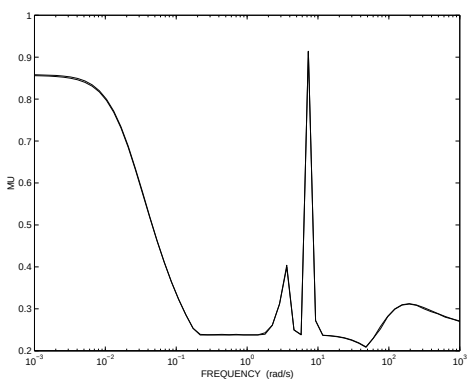

Fig. 3. μ-value of Closed-loop System with BMSVC

A Hankel norm can be used for a linear model reduction [10]. The reduced order model can be found by minimizing the optimal Hankel norm error between the original model and the reduced order model. Hankel norm method has not been used to reduce the controller order in any previous work [7] - [11] except in [13] and [14]. The problem with linear model reduction techniques such as Hankel norm reduction is that there is no systematic method to determine the order of the reduced model should be or the dynamics that should be retained in the reduced model except for trial-and-error. In this section we will use Hankel norm to obtain the reduced order μ-controller with the help of bifurcation subsystem information.

Bifurcation subsystem method claims although a number of states are involved in the instability, only a subset of them, which constitutes the bifurcation subsystem, experiences, produces, and causes the full system bifurcation. The bifurcation subsystem information was used to simplify the obtained controller as well as the controller design in [14] [15]. The bifurcation subsystem for the Hopf bifurcation is of 15th order, which suggests the the μ synthesis controller of 15th order could achieve the control objective of the damping the interarea oscillation since the rest of the system can be truncated, and thus need not be controlled because the bifurcation is experienced, produced, and caused within this 15th order bifurcation subsystem model.

The order of the controller could be further reduced. It is pointed out that the largest subsystem that satisfies both bifurcation subsystem condition and geometric decoupling condition is considered as the bifurcation subsystem in order to provide the greatest control design flexibility for the bifurcation that is experienced, produced, and caused within it [5] [6]. The bifurcation subsystems exist of order $8 \leq k \leq 15$ for this specific bifurcation. This implies the order of bifurcation subsystem and the controller order can be decreased further. The result, is that an 8th order BMSVC that preserves the control performance and the system stability in the presence of the uncertainty can be obtained by using Hankel norm reduction. It should be pointed out that as long as the reduced controller order is of at least 6th order, the control performance will not severely degrade. This agrees with the above statements of the order of minimum bifurcation subsystem. Therefore, bifurcation subsystem method provides a criterion for controller order reduction. This will be evaluated in the follows.

IV. RGA-MATRIX ANALYSIS

RGA matrix [20] provides a simple but powerful tool for the control structure and controllability analysis of MIMO systems. The RGA matrix of a transfer function G is defined as [20]:

$$RGA(G) = G \times (G^{-1})^T$$

where $\times$ indicates the Hadamard or Schur product.

Ths magnitude of a RGA matrix element indicates the effectiveness and capability of input disturbance rejection of the control. Also, a system with large RGA element magnitudes around the crossover frequency implies that the plant is fundamentally difficult to control due to uncertain or unmodeled actuator dynamics. For a properly scaled system, a small magnitude (less than 1.0) of a RGA element indicates the weak direction of the corresponding control, and a large magnitude (greater than 1.0) indicates the system is very sensitive to the input disturbance [20]. Therefore, there are two criterions [14] for a RGA analysis: (1) for each output j there should be only one element (i, j) of magnitude close to 1 since this means that the gain from input i to output j is not affected by closing other loops [20] or by changes in input magnitudes other than input i; and (2) a decoupled control structure is a perfect control structure, i.e., in each subsystem composed of a subset of the outputs of the system, there is one and only one effective control and each output of any subsystem are only regulated by its own control input.

The RGA matrix is proved to capture the bifurcation subsystem structure [21] such that the RGA matrix is block diagonal

where the diagonal blocks represent the bifurcation and external subsystems structure. This capability could allow one to observe subsystems that can bifurcate if the proper bifurcation parameter is chosen. It also allows one to observe the dynamical structure of a system when different controllers are used.

A general structure of a RGA matrix of the system can be found in Table I and Table II. For our analysis, three blocks (refer to Table I and II) are the most important: (1) the power control related block (PRB) (P_{R_i}, P_{O_j}), $i, j = 1, 2, \cdots, 4$; (2) the voltage control related block (VRB) (V_{R_i}, V_{O_j}), $i, j = 1, 2, \cdots, 5$; and (3) the frequency control related block (FRB) (P_{R_i}, ω_j), (V_{R_k}, ω_j), $i, j = 1, 2, \cdots, 4$, $k = 1, 2, \cdots, 5$. The PRB and VRB blocks are the diagonal blocks of the upper nine rows of the RGA matrix. The FRB block is the last four rows of the RGA matrix. There should be one large element in each of these rows if the control is effective. Effective control of the network buses (rows associated with V_{O_6} to $V_{O_{13}}$ called the network related block NRB) should only have one large element close to 1.0 so that there is no fighting among different voltage control devices for control of voltage at this network bus [14].

The RGA analysis of the open loop system at steady state and bifurcation frequency was shown in [14]. At both steady state and bifurcation frequency, the RGA-matrix element magnitudes of the open loop system suggests that the controls on power are not effective since the power related block (PRB) (P_{R_i}, P_{O_i}), $i = 1, \cdots, 4$, are much smaller than 1.0, and the controls on voltage are very sensitive to input disturbance since (V_{R_i}, V_{O_i}), $i = 1, \cdots, 5$, in voltage related block (VRB) are much greater than 1.0. There are conflicts among the controls since in VRB each control is trying to stabilize a number of outputs and each output is affected by several controls ($(V_{R_i}, V_{O_i}) > 1.0$ for several inputs i). On the other hand, all of the elements in frequency related block (FRB) have extremely small values (10^{-17}) and it reflects that the controls do not have much effect on the generator speed. This explains why this two area example system is vulnerable to the interarea oscillations and the conventional control designs CPSS at generator 3 and CSVC at bus 101 are not capable of achieving good control performance and robustness over the operating condition variations at either steady state or bifurcation frequency.

The performance of the BMSVC is expected to be excellent compared to the open loop system, but not as good as the MPSS [14] and MSVC [15], which were designed using the information of the full system model. As an example, the RGA matrices of the closed-loop system with BMSVC at steady state and bifurcation frequency are shown in Table I and II, respectively. Table I shows that at steady state the effectiveness of control is still excellent because the control structure is decoupled although there are some large elements in the column of VRB under control V_{R_2} and V_{R_4}, which are trying to control the buses that are electrically close to them. The rest of the control pairs in PRB, VRB are still dominant. On the other hand, BMSVC has strong controls over most of the voltage output variables. This can be seen from the column under V_{R_5} in VRB. Also, BMSVC permits better frequency control than other voltage control signals if we compare the magnitudes of elements (V_{R_5}, ω_i) and (V_{R_i}, ω_i), $i = 1, 2, \cdots, 4$, in FRB. Almost no output is subject to the input disturbance. This is true because almost none of the RGA matrix element magnitudes are much greater than one at steady state. In [21], an almost completely decoupled closed-loop system structure was achieved and the network voltage control is dominated by the MSVC at bus 101. Although BMSVC is not as good as MSVC, this degradation is anticipated.

This loss of controllability structural robustness occurs because Δ_P, the uncertainty in the dynamics, represents the uncertainty only in the bifurcation subsystem for the BMSVC where Δ_P represents uncertainty in both the bifurcation subsystem and the external system dynamics for the MSVC. The uncertainty components of Δ_P associated with the external system produced the excellent control structure for the external system in the MSVC (for a definition and discussion of Δ_P effects see [14]). More important, bifurcation subsystem precisely preserves the dynamic properties of the full system at bifurcation frequency other than at steady state. This is verified by inspecting the RGA-matrix at bifurcation frequency shown in Table II.

The degradation of the control structure of the closed-loop system with BMSVC has been greatly improved in Table II at the bifurcation frequency but the control structure of BMSVC has changed so network voltage control of the BMSVC is now assumed in part by the generators. The omission of the dynamics external to the bifurcation subsystem thus has very little effect on control structure at bifurcation frequency, and the control of power, P_{O_i}, $i = 1, 2, \cdots, 4$, and V_{O_i}, $i = 1, 2, \cdots, 5$, are not subject to disturbance because their magnitudes are very close to one. Moreover, there should be no fighting for control of output variables because there is only one dominant element in each row. Thus, the control structure at bifurcation for BMSVC is still excellent although it is expected that the control performance will degrade compared to the full system based MSVC design, especially for control of voltage at steady state. From Table I and II it is anticipated that the BMSVC substantially enhances the control performance of the system at both steady state and bifurcation frequency compared to the open loop system. This will be verified by time simulation.

V. Time Simulation of BMSVC

The time response of the closed-loop system with the reduced 8th order BMSVC is shown in Fig 4 when the active power load increases by 50% above the nominal load value for the open loop system.

From Fig 4 the control performance of BMSVC is still excellent although the control performance somewhat degrades compared to that of the MSVC design based on the full system shown in [15]. This is expected because the states of the external system, that are computationally considered irrelevant, are discarded as well as uncertainty associated with these states in the BMSVC control design shown in Fig 4 but is not discarded in the full system based MSVC design. The uncertainty components of Δ_P associated with the subsystem external to the bifurcation subsystem assures better control of steady state voltage, improved decoupling between subsystems, in the external system, and between those subsystems and the bifurcation subsystem, and assignment of only one control for each subsystem and for the external system. This improvement in

TABLE I

RGA MATRIX OF CLOSED-LOOP SYSTEM WITH BMSVC AT STEADY STATE

	P_{R_1}	P_{R_2}	P_{R_3}	P_{R_4}	V_{R_1}	V_{R_2}	V_{R_3}	V_{R_4}	V_{R_5}
P_{O_1}	1.0060e+00	1.5347e-02	1.3784e-02	1.2967e-02	7.3904e-03	4.9559e-02	6.5134e-03	3.1206e-02	5.9140e-02
P_{O_2}	1.5983e-02	9.254e-01	1.3591e-02	1.2590e-02	6.0213e-03	5.0216e-02	8.0042e-03	3.6195e-02	6.5081e-02
P_{O_3}	1.1665e-02	1.1064e-02	9.0828e-01	1.0003e-02	4.5105e-03	2.8970e-02	1.0559e-02	3.9376e-02	4.6292e-02
P_{O_4}	1.3619e-02	1.2774e-02	1.2658e-02	9.1181e-01	5.8595e-03	3.6638e-02	9.7707e-03	4.5056e-02	5.5768e-02
V_{O_1}	7.9913e-03	6.9698e-03	5.9029e-03	6.3371e-03	6.9368e-01	1.6993e-02	3.6896e-03	7.3897e-03	9.3491e-03
V_{O_2}	3.3231e-02	3.0060e-02	2.1609e-02	2.2430e-02	9.3847e-03	6.0276e-01	6.5697e-03	7.9023e-03	4.0460e-02
V_{O_3}	7.3795e-03	8.3967e-03	1.0745e-02	9.2341e-03	3.3209e-03	1.0111e-02	6.2234e-01	3.9436e-02	1.4358e-03
V_{O_4}	1.3444e-02	1.4668e-02	1.8105e-02	1.5943e-02	2.6312e-03	4.5831e-03	1.5192e-02	4.1366e-01	3.7539e-02
V_{O_5}	2.4017e-01	2.3216e-01	2.1579e-01	2.0196e-01	2.0690e-02	5.2761e-02	6.2405e-02	6.4415e-02	9.7022e-01
V_{O_6}	1.0782e-01	1.0334e-01	1.1968e-02	2.8893e-02	4.3499e-02	3.8408e-01	1.3038e-01	4.6288e-01	2.3531e-01
V_{O_7}	1.2339e-01	1.1906e-01	1.8330e-02	3.7290e-02	4.9877e-02	4.2037e-01	1.4638e-01	5.1440e-01	2.6997e-01
V_{O_8}	9.5612e-02	7.1100e-02	8.9565e-02	9.5418e-02	7.7417e-02	2.1257e-01	5.4032e-02	8.0798e-02	4.3376e-01
V_{O_9}	1.2579e-02	5.7445e-03	3.4200e-02	3.0584e-02	7.8163e-02	4.0655e-01	3.6872e-02	3.8470e-01	1.1400e-01
$V_{O_{10}}$	1.6507e-02	5.6489e-03	4.0276e-02	3.5790e-02	9.4631e-02	4.9358e-01	4.4378e-02	4.6901e-01	1.3626e-01
$V_{O_{11}}$	5.6705e-02	3.9540e-02	2.7705e-02	3.8114e-02	1.5375e-02	5.1562e-02	8.7358e-02	2.5326e-01	5.6042e-01
$V_{O_{12}}$	2.3900e-02	3.2892e-02	5.6578e-02	4.4566e-02	4.0777e-02	1.5483e-02	1.6637e-01	1.1743e-01	3.5346e-01
$V_{O_{13}}$	1.2086e-02	3.3784e-04	3.5474e-02	2.6915e-02	6.0732e-02	2.8429e-02	1.1792e-02	5.0557e-01	4.2649e-01
ω_1	1.6734e-04	5.3971e-04	5.4780e-04	2.4878e-04	8.6088e-05	3.4057e-04	8.6195e-05	1.9400e-04	4.7443e-04
ω_2	3.6892e-04	5.1010e-04	1.2978e-04	3.0668e-04	7.4402e-05	3.5687e-04	8.4021e-05	1.0901e-04	4.0591e-04
ω_3	2.9003e-04	4.9169e-04	1.3426e-04	4.38859e-04	8.4571e-05	2.6482e-04	8.1586e-05	2.4718e-04	4.5490e-04
ω_4	4.3891e-04	2.3995e-04	4.2399e-04	5.8669e-04	7.5876e-05	2.9002e-04	6.5806e-05	1.4586e-04	4.6084e-04

TABLE II

RGA MATRIX OF CLOSED-LOOP SYSTEM WITH BMSVC AT BIFURCATION FREQUENCY

	P_{R_1}	P_{R_2}	P_{R_3}	P_{R_4}	V_{R_1}	V_{R_2}	V_{R_3}	V_{R_4}	V_{R_5}
P_{O_1}	1.1019e+00	5.7585e-02	3.7552e-02	1.2345e-02	9.6924e-02	2.8878e-01	4.9564e-02	7.8733e-02	7.4295e-02
P_{O_2}	9.6914e-02	8.6738e-01	2.6025e-02	1.0120e-02	3.9752e-02	1.4499e-01	4.2059e-02	6.8054e-02	5.2614e-02
P_{O_3}	5.2543e-02	1.0297e-02	1.1733e+00	1.0417e-01	2.6107e-01	8.2458e-02	1.9743e-01	1.6379e-01	9.0109e-02
P_{O_4}	6.5975e-02	1.7717e-02	1.8301e-01	1.2342e+00	2.6818e-01	8.6142e-02	4.5248e-02	1.3989e-01	7.6613e-02
V_{O_1}	2.9315e-01	1.0266e-01	3.5948e-02	2.6058e-02	1.7265e+00	7.8338e-01	1.4986e-02	2.5611e-02	2.4912e-02
V_{O_2}	6.7153e-02	1.4869e-01	2.0044e-02	1.0724e-02	6.5889e-01	1.4119e+00	2.2625e-02	4.2463e-02	1.4069e-01
V_{O_3}	3.6153e-02	2.0008e-02	1.6570e-01	7.2677e-02	1.2978e-02	2.8034e-02	8.4185e-01	1.9377e-01	3.6141e-02
V_{O_4}	4.1250e-03	5.3864e-04	1.5774e-02	4.6136e-02	2.9026e-02	3.2926e-02	1.3343e-01	7.4927e-01	7.1179e-02
V_{O_5}	6.0191e-02	8.4784e-03	2.7554e-02	5.5248e-03	6.0878e-03	2.0887e-01	1.2551e-02	8.9660e-02	9.3302e-01
V_{O_6}	7.8473e-02	9.1388e-02	8.7418e-03	2.2059e-02	1.7098e-01	3.5523e-01	2.6064e-02	9.7670e-02	4.9249e-02
V_{O_7}	8.6017e-02	1.0015e-01	9.5977e-03	2.4151e-02	1.8735e-01	3.8925e-01	2.8548e-02	1.0702e-01	5.3965e-02
V_{O_8}	2.3022e-01	4.1092e-02	2.9811e-02	2.6700e-02	9.9785e-01	4.1550e-01	2.1413e-02	5.8698e-03	3.7373e-02
V_{O_9}	1.2963e-02	1.2550e-03	1.5388e-02	2.0337e-02	1.7278e-02	3.4130e-02	9.8380e-03	8.5133e-02	4.2751e-02
$V_{O_{10}}$	1.5831e-02	1.5316e-03	1.8794e-02	2.4840e-02	2.1104e-02	4.1688e-02	1.2018e-02	1.0398e-01	5.2217e-02
$V_{O_{11}}$	6.0779e-02	9.4553e-02	1.0749e-02	2.0686e-02	1.7335e-01	5.4268e-01	2.6106e-02	3.0654e-02	4.6779e-02
$V_{O_{12}}$	1.4409e-02	1.0340e-02	9.5294e-02	1.5578e-02	2.6456e-02	1.2835e-02	4.6577e-01	1.0787e-01	2.7473e-02
$V_{O_{13}}$	5.0555e-03	8.7158e-04	1.8088e-02	3.2069e-02	2.7563e-02	1.0894e-02	2.1947e-02	1.9140e-01	1.5782e-02
ω_1	2.5350e-01	1.2544e-01	2.8540e-01	2.5556e-01	5.9047e-04	4.9151e-04	1.6311e-01	1.2567e-04	5.1015e-03
ω_2	1.1161e-01	1.1250e-01	2.1293e-01	1.9053e-01	2.3490e-04	4.5730e-04	1.2273e-01	4.9085e-05	3.7291e-03
ω_3	4.2392e-01	2.7446e-01	2.6454e-01	1.8483e-01	3.5395e-05	1.3487e-04	1.7188e-01	3.2225e-04	1.0889e-02
ω_4	4.3062e-01	2.7942e-01	2.0970e-01	2.3085e-01	1.0662e-04	9.5707e-05	1.1763e-01	6.0289e-04	1.0272e-02

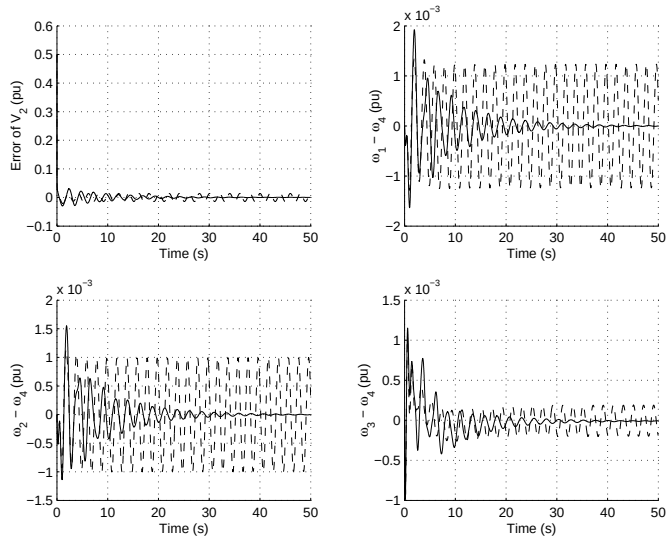

Fig. 4. Open Loop System (- -) and Closed-loop System with BMSVC (-)

control is produced by using the robust control to control each subsystem in a manner to coordinate with the bifurcation subsystem with its control effects. In some sense, the robust bifurcation subsystem control becomes a supervisory controller that is assumed a hirarchical role via its knowledge of the full system dynamics and the bifurcation subsystem. This supervisory control can be quite detrimental if there are two bifurcation subsystem based controls for two different bifurcations because their supervisory control capabilities fight one another producing poor control performance. Designing one controller to stabilize both bifurcations overcomes the problem. Designing reduced order bifurcation subsystem model robust controls also disables this supervisory control. The design of the robust control for the full system model and for the bifurcation subsystem model along with the RGA matrix analysis of both demonstrates the supervisory control features.

The most important conclusion drawn from this simulation result is that it again verifies bifurcation subsystem method because the BMSVC designed based on the bifurcation subsystem robustly stabilizes the full system. It implies that the central manifold of the full system lies in or is contained in the bifurcation subsystem.

VI. Conclusions

This paper presents a bifurcation subsystem based approach for model and controller reduction of a μ-synthesis SVC control design. The RGA information analysis and time simulation results indicate that BMSVC design is able to achieve satisfactory control performance and robustness and is very competible compared to the full system based MPSS and MSVC design. The successful application of the BMSVC to stabilize the full system model also justifies that the center manifold dynamics of the full system are preserved in the bifurcation subsystem.

The bifurcation subsystem method is fully exploited in this paper. Bifurcation subsystem is used to provide a low order model based on that a BMSVC can be designed to stabilize the full system and to reduce the BMSVC order. The control performance of the BMSVC is excellent although the bifurcation subsystem model is much lower than the full system. All of these properties can be derived from (1) the bifurcation subsystem method that claims the bifurcation subsystem method is more than a model reduction method and precisely preserves the dynamic properties of the full nonlinear system at bifurcation frequency and (2) the robust control design methodology based on the bifurcation subsystem method. Therefore, the bifurcation subsystem based model reduction approach makes it possible to synthesize the control for a large power system.

References

[1] P. Kokotovic, J. Allemong, J. Winkelman, and J.Chow, “Singular Perturbation and Iterative Separation of Time Scales”, Vol. 16, Automatica, Jan., 1980

[2] J. Zaborszky, K. W. Whang, G. M. Huang, L. J. Chiang, S. Y. Lin, “A Clustered Dynamic Model for a Class of Linear Autonomous Systems Using Simple Enumerative Sorting”, Vol. 29, No. 11, IEEE Transactions on Circuits and Systems, Nov., 1982

[3] H. Haken, “Synergetics: An Introduction: Nonequilibrium Phase Transitions and Self-organization in Physics, Chemistry, and Biology”, Springer-Verlag, 1978

[4] S. Wiggins, “Introduction to Applied Nonlinear Dynamic Systems and Chaos”, Springer-Verlag, 1990

[5] M. Yue, R. Schlueter, “Bifurcation Subsystem for Saddle-node Bifurcation”, Proceedings of North American Power Symposium, Oct., 2001

[6] M. Yue, R. Schlueter, “Bifurcation Subsystem for Hopf Bifurcation”, Proceedings of North American Power Symposium, Oct., 2001

[7] S. Chen, O. P. Malik, “H_∞ Optimization-based Power System Stabiliser Design”, IEE Proc. Gener., Transmi. Distrib., Vol. 142, No. 2, March, 1995

[8] Q. Zhao, J. Jiang, “Robust SVC Controller Design for Improving Power System Damping”, IEEE Transactions on Power System, Vol. 10, No. 4, Nov., 1995

[9] M. Djukanovic, M. Khammash, V. Vittal, “Application of the Structured Singular Value Theory for Robust Stability and Control Analysis in Multimachine Power System”, IEEE Transactions on Power System, Dec., 1997

[10] G. E. Boukarim, S. Wang, J. H. Chow, G. N. Taranto, N. Martins, “A Comparison of Classical, Robust, and Decentralized Control Design for Multiple Power System Stabilizers”, IEEE Transactions on Power Systems, Jan., 2000

[11] G. Rogers, “Power System Oscillations”, Kluwer’s Power Electronics and Power System Series, 2000

[12] M. Klein, L. X. Le, G. J. Rogers, S. Farrokhpay, N. J. Balu, “H_∞ Damping Controller Design in Large Power Systems”, IEEE Transactions on Power Systems, Vol. 10, No. 1, Feb., 1995

[13] X. Yu, M. Khammash, and V. Vittal, “Robust Design of a Damping Controller for Static Var Compensators in Power Systems”, IEEE Transactions on Power Systems, Aug., 2001

[14] M. Yue and R. Schlueter, “μ-synthesis Power System Stabilizer Design Using a Bifurcation Subsystem Based Methodology”, to appear in IEEE Transactions on Power Systems

[15] M. Yue and R. Schlueter, “A μ-synthesis Robust SVC Control Design”, to appear in the Proceedings of IEEE PES Transmission and Distribution Conference, Dallas, Oct., 2003

[16] M. Klein, G. J. Rogers, and P. Kundur, “A Fundamental Study of Interarea Oscillations in Power Systems”, IEEE Transactions on Power Systems, Vol. 6, No. 3, 1991

[17] M. Yue, R. Schlueter, “Classification of Types, Classes, and Agents for Power System”, IEEE Power Engineering Review, Vol. 22, No. 8, Aug., 2002

[18] M. Yue, R. Schlueter, “Bifurcation Subsystem Identification”, IEEE PES Summer Meeting, July, 2002

[19] G. E. Boukarim and J. Chow, “Modeling of Nonlinear System Uncertainties using a Linear Fractional Transformation Approach”, Proceedings of the American Control Conference, June, 1998

[20] S. Skogestad, I. Postlethwaite, “Multivariable Feedback Control, Analysis and Design”, John Wiley & Sons, 1997

[21] M. Yue, “Bifurcation Subsystem Method and Its Applications in Analysis and Control Design for Power Systems”, Ph.D Dissertation, Michigan State University, 2002

[22] “Mu Analysis and Synthesis Toolbox User’s Guide”, The Mathworks Inc.