BROOKHAVEN
NATIONAL LABORATORY

BNL-73472-2005-CP

Possible Phase Loop for The Global Decoupling

Y. Luo, P. Cameron, A. Della Penna, R. Jones, A. Marusic, S. Peggs, T. Roser, D. Trbojevic

Presented af the Patticle Accelerator Conference (PAC'05)
Knoxville, Tennessee
May 16-20, 2005

Collider-Accelerator Department

Brookhaven National Laboratory
P.O. Box 5000
Upton, NY 11973-5000
www.bnl.gov

Managed by
Brookhaven Science Associates, LLC
for the United States Department of Energy under
Contract No. DE-AC02-98CH10886

This is a preprint of a paper intended for publication in a journal or proceedings. Since changes may be made before publication, this preprint is made available with the understanding that it will not be cited ,or reproduced without the permission of the author.

DISCLAIMER

This report was prepared as an account of work sponsored by an agency of the United States Government. Neither the United States Government nor any agency thereof, nor any of their employees, nor any of their contractors, subcontractors, or their employees, makes any warranty, express or implied, or assumes any legal liability or responsibility for the accuracy, completeness, or any third party's use or the results of such use of any information, apparatus, product, or process disclosed, or represents that its use would not infringe privately owned rights. Reference herein to any specific commercial product, process, or service by trade name, trademark, manufacturer, or otherwise, does not necessarily constitute or imply its endorsement, recommendation, or favoring by the United States Government or any agency thereof or its contractors or subcontractors. The views and opinions of authors expressed herein do not necessarily state or reflect those of the United States Government or any agency thereof.

FOR UNCLASSIFIED, UNLIMITED STI PRODUCTS

Available electronically at:

OSTI:

http://www.osti.gov/bridge

Available for a processing fee to U.S. Department of Energy and its contractors, in paper from:

U.S. Department of Energy
Office of Scientific and Technical Information
P.O. Box **62**
Oak Ridge, **TN 37831**
Phone: **(865) 576-8401**
Facsimile: **(865) 576-5728**
E-mail: reports@adonis.osti.gov

National Technical Information Service (NTIS):

Available for sale to the public from:

U.S. Department of Commerce
National Technical Information Service
5285 Port Royal Road
Springfield, VA **22131**
Phone: **(800) 553-6847**
Facsimile: **(703) 605-6900**
Online ordering: **http://www.ntis.gov/ordering.htm**

Printed on recycled paper

POSSIBLE PHASE LOOP FOR THE GLOBAL DECOUPLING *

Y. Luo, P. Cameron, A. Dellapenna, R. Jones, A. Marusic, S. Peggs, T. Roser, D. Trbojevic
Brookhaven National Laboratory, Upton, NY 11973, USA

Abstract

The two eigentunes Q_I and Q_{II}, two eigenmode amplitude ratios R_I and R_{II}, and two eignmode phase differences $\Delta\phi_I$ and $\Delta\phi_{II}$, are defined as the coupling observables for the linear weak difference betatron coupling. Simulations were carried out to investigate their behaviors in global decoupling scans. It was found that the amplitude ratios $R_{I,II}$ are more sensitive than the tune split when the decoupling scan is approaching the global uncoupled point, and that the phase differences $\Delta\phi_{I,II}$ tell the right global decoupling direction, the right strength combination of the skew quadrupoles or families. The analytical solution to these six coupling observables is calculated through both the strict matrix approach and the perturbation Hamiltonian approach. The constant phase differences in the right decoupling direction hint a possible global decoupling phase loop. Dedicated beam experiments were carried out at the Relativistic Heavy Ion Collider (RHIC). The preliminary results from the beam experiments are presented. These *six* parameters can be used for the global decoupling in feedback mode, especially on the non-stop energy ramp.

INTRODUCTION

The global decoupling on the ramp is very important for the Relativistic Heavy Ion Collider (RHIC) polarized proton run, and for the Large Hadron Collider (LHC). The traditional skew quadrupole scan can not be used for the ramp decoupling purpose. The skew quadrupole modulation was put forth at RHIC to fulfill global decoupling on the ramp in feed-forward mode. The coupling angle modulation correction scheme has proven to be fast and robust. It has been applied to accomplish RHIC ramp coupling corrections. However, if considering the changes from ramp to ramp, the global decouling feedback is necessary.

Tune feedback uses the high resolution phase lock loop (PEL) system [1] to track the eigentunes. This system has two limitations that have prevented the implementation of tune feedback during normal RHIC operations. The first results from the large dynamic range required to accommodate the coherent spectrum generated by short bunch lengths and fast orbit shifts at transition. The second results from the effect of coupling on the functioning of the PLL, and on overall system stability when tune feedback is turned on. Measures to deal with these limitations are being taken [2].

During normal operation at RHIC, and more so during the perturbation of skew quadrupole modulation or chromaticity measurement, the PLL tune meter occasionally fails to properly track both eigentunes under some coupling situations. Beyond this, when tune feedback is turned on and the loop is closed to the quadrupole magnets, the feedback system becomes unstable when coupling rotates either of the eigenmodes more than 45 degrees. This poses a big challenge to the robust PLL system to be used for RHIC and LHC tune feedback on the ramp [3]. The jumping between eigenmodes happens when the machine is working close to the coupling resonance, that is, $Q_{x,0} - Q_{y,0} - p = 0$, where p is the integer tune split. For the purpose of improved coupling measurement, during the 2004 RHIC run the PLL was re-configured to measure the projections of both eigenmodes in both planes. In addition, a formalism [4] was developed to properly parameterize this measurement.

In this paper we present the *six* coupling observables defined in that formalism, namely two eigentunes, two eigenmode amplitude ratios, and two eigenmode phase differences. It was found that the amplitude ratios are more sensitive to coupling than the tune split when the machine is working close to the coupling resonance line, and the phase differences tell the right global decoupling direction. If these *six* parameters can be continuously measured on the ramp, the coupling feedback mode can be applied. Therefore, the robust PLL system is assured on the ramp. For this purpose, during the 2005 RHIC run the PLL was re-configured to measure the projections of both eigenmodes in both planes.

In the following, we first define the six coupling observables, then present simulations to investigate their behaviors in a 2-D decoupling scan. Their analytical solutions are given in both strict matrix and perturbation Hamiltonian approaches. Results of the six parameter measurement with PLL system at RHIC are presented. A possible global decoupling phase loop is proposed and discussed.

SIX COUPLING OBSERVABLES

For the linearly coupled circular accelerator, x and y coordinates of the free oscillation include the contributions from both eigenmodes. Here we assume that eigenmode I is more linked to the horizontal plane, and eigenmode 11 is more linked to the vertical plane. The particle's nth turn x and y coordinates can be cast as

$$\begin{cases} x_n = A_{I,x}\cos[2\pi Q_1(n-1)+\phi_{I,x}] + \\ \qquad A_{II,x}\cos[2\pi Q_2(n-1)+\phi_{II,x}] \\ y_n = A_{I,y}\cos[2\pi Q_1(n-1)+\phi_{I,y}] + \\ \qquad A_{II,y}\cos[2\pi Q_2(n-1)+\phi_{II,y}] \end{cases}, \quad (1)$$

where Q_I and Q_{II} are the eigentunes. $A_{i,z}$, $i = I, 11$, $z = x, y$, is the amplitude of the eigenmode i's projection

"Work supported by U.S. DOE under contract No DE-AC02-98CH10886

onto the z plane. They are non-negative. $\phi_{i,z}$ is the initial phase of the eigenmode i's projection onto the the z plane. Besides the two eigentunes Q_I and Q_{II}, here we define another four observables as the weak difference coupling observables. R_I and R_{II} are the eigenmode amplitude ratios.

$$\left| \begin{array}{lcl} R_I & = & \frac{A_{I,y}}{A_{I,x}} \\ R_{II} & = & \frac{A_{II,x}}{A_{II,y}} \end{array} \right. \quad (2)$$

R_i is linked to eigenmode i. Under the uncoupled situation, $R_{I,II} = 0$. $\Delta\phi_I$ and $\Delta\phi_{II}$ are the eigenmode phase differences,

$$\left\{ \begin{array}{lcl} \Delta\phi_I & = & \phi_{I,y} - \phi_{I,x} \\ \Delta\phi_{II} & = & \phi_{II,x} - \phi_{II,y} \end{array} \right. . \quad (3)$$

$\Delta\phi_i$ is linked to eigenmode i. Under the uncoupled situation, $\Delta\phi_I$ and $\Delta\phi_{II}$ have no meaning. The fractional eigentune split $|Q_I - Q_{II} - p|$ has been used as the coupling observable in the conventional skew quadrupole scan decoupling, and it is also currently used in the novel skew quadrupole modulation. The shortcoming to use the eigentune split as the coupling observable is that the skew quadrupole settings have to be changed in order to detect the residual coupling and/or to check the decoupling effects. The eigentune split is not suitable for the decoupling in the feedback mode on the ramp.

SIMULATION

Here we carry out the global decoupling scan simulation to investigate the behaviors of the 6 coupling observables defined above [4]. The smooth accelerator model is used. The uncoupled tunes are $Q_{x,0} = 28.22$, $Q_{y,0} = 29.23$, and the ring circumference is 3813m. Three skew quadrupoles are equidistantly inserted in the ring. Here we give a 2-D decoupling scan example. Before the 2-D scan, the first skew quadrupole's strength is set to $(k_s dl)_1 = 0.005$ m^{-1}. The other two skew quadrupoles are scanned to compensate the global coupling introduced by the first skew quadrupole. From the optics model, the correction strengths for the second and the third skew quadrupoles should be $(k_s dl)_{2,3} = 0.005\mathrm{m}^{-1}$.

Fig. 1 shows the eigentune split $|Q_I - Q_{II}|$. Fig. 2 shows the amplitude ratios $R_{I,II}$ during the 2-D scan. Compared to the tune split, the amplitude ratios decrease more drastically when the scan is approaching to the uncoupled point at $(k_s dl)_{2,3} = 0.005\ \mathrm{m}^{-1}$. At the uncoupled point, the tune split reaches its minimum and $R_{I,II} = 0$.

Fig. 3 and Fig. 4 show the phase difference $\Delta\phi_I$ and $\Delta\phi_{II}$, respectively. It is noticed that all the phase difference contour lines point to the uncoupled point $(k_s dl)_{2,3} = 0.005\ \mathrm{m}^{-1}$! in addition, along each contour line when the phase differences crosses the uncoupled point there is a π phase jump.

From the above 2-D decoupling scan, the amplitude ratios are more sensitive than the tune split when the accelerator is working close to the globally uncoupled point.

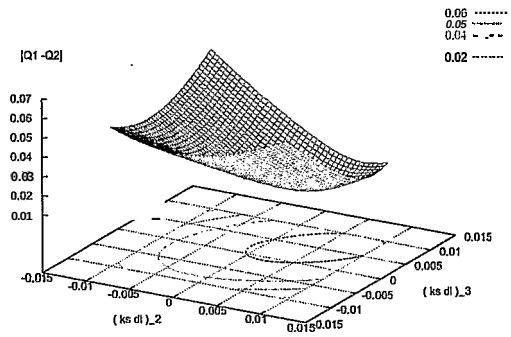

Figure 1: Tune split $|Q_I - Q_{II}|$ in 2-D decoupling scan.

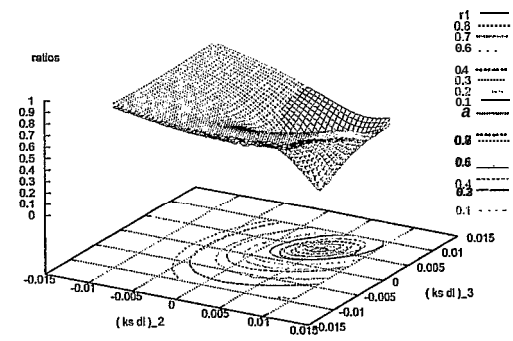

Figure 2: Amplitude ratios $R_{I,II}$ in 2-D decoupling scan.

However, their values at one scan point do not tell how to achieve the smaller amplitude ratios. They can be used to check the right or wrong skew quadrupole scan direction.

From Fig. 3 and Fig. 4, the phase difference $\Delta\phi_I$ and $\Delta\phi_{II}$ keep constant if the decoupling scan is in the right direction. The scan direction is determined by the skew quadrupole strength combination ratio. Therefore, if knowing the relation between the scan direction and the phase differences, from the phase difference measurement at one point it is possible to determine the right skew quadrupole combination to the global uncoupled point. The right direction decoupling scan is the shortest way to get to the global uncoupled point. In the right direction decoupling scan, if a π jump is met, then the global uncoupled point is reached. The amplitude ratios can be helpful for the cross-check during the decoupling scan.

ANALYTICAL SOLUTION

In this section we give the analytical solutions to six coupling parameters through the strict matrix and the perturbation Hamiltonian approaches.

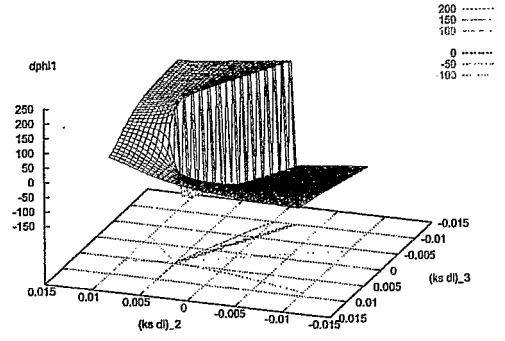

Figure 3: Phase differences $\Delta\phi_I$ in 2-D decoupling scan.

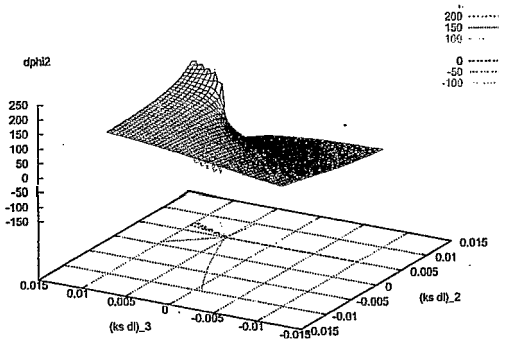

Figure 4: Phase differences $\Delta\phi_{II}$ in 2-D decoupling scan.

Action-angle parameterization approach

In the strict matrix approach, single particle motion is represented by [7, 4]

$$\begin{pmatrix} x \\ x' \\ y \\ y' \end{pmatrix} = \mathbf{P} \cdot \begin{pmatrix} \sqrt{2J_1}\cos\Phi_1 \\ -\sqrt{2J_1}\sin\Phi_1 \\ \sqrt{2J_2}\cos\Phi_2 \\ -\sqrt{2J_2}\sin\Phi_2 \end{pmatrix}, \tag{4}$$

where $J_{I,II}$, $\Phi_{I,II}$ are the actions and betatron phases of the two eigenmodes. Then,

$$\begin{cases} x &= p_{11}\sqrt{2J_1}\cos\Phi_1 + \\ & \quad p_{13}\sqrt{2J_2}\cos\Phi_2 - p_{14}\sqrt{2J_2}\sin\Phi_2 \\ y &= p_{31}\sqrt{2J_1}\cos\Phi_1 - p_{32}\sqrt{2J_1}\sin\Phi_1 + \\ & \quad p_{33}\sqrt{2J_2}\cos\Phi_2 \end{cases}. \tag{5}$$

Therefore,

$$\begin{cases} R_I &= \sqrt{p_{31}^2 + p_{32}^2}/p_{11} \\ R_{II} &= \sqrt{p_{13}^2 + p_{14}^2}/p_{33} \end{cases}, \tag{6}$$

$$\begin{cases} \Delta\phi_I &= \arctan(p_{32}/p_{31}) \\ \Delta\phi_{II} &= \arctan(p_{14}/p_{13}) \end{cases}, \tag{7}$$

or in the Twiss and coupling parameters,

$$\begin{cases} R_I &= \sqrt{\beta_1 c_{22}^2 + 2\alpha_1 c_{22} c_{12} + \gamma_1 c_{12}} \,/\, (r\sqrt{\beta_1}) \\ R_{II} &= \sqrt{\beta_2 c_{11}^2 - 2\alpha_2 c_{11} c_{12} + \gamma_2 c_{12}} \,/\, (r\sqrt{\beta_2}) \end{cases} \tag{8}$$

$$\begin{cases} \Delta\phi_I &= \arctan(-c_{12}/(\alpha_1 c_{12} + \beta_1 c_{22})) \\ \Delta\phi_{II} &= \arctan(c_{12}/(-\alpha_2 c_{12} + \beta_2 c_{11})) \end{cases} \tag{9}$$

where we define $\gamma_1 = (1+\alpha_1^2)/\beta_1$, $\gamma_2 = (1+\alpha_2^2)/\beta_2$.

Hamiltonian Perturbation Approach

The perturbation Hamiltonian theory [8, 9, 10] gives the isolated linear difference coupling Hamiltonian as

$$H_2 = |C^-|\sqrt{a_x a_y}\cos(\Psi_x - \Psi_y + \Delta\cdot\varphi + \chi) \tag{10}$$

where A is the uncoupled fractional tune split, $A = Q_{x,0} - Q_{y,0} - p$. The coupling coefficient C^- is

$$C^- = |C^-|e^{i\chi} = \frac{1}{2\pi}\int_0^L \sqrt{\beta_x\beta_y}k_s e^{i[\Phi_x - \Phi_y - 2\pi\Delta\cdot s/L]}dl \tag{11}$$

After some algebra calculations, the single particle motion is given by

$$\begin{cases} x(s) &= \sqrt{2\beta_x}\{a\cos[\Psi_x + (\nu - \Delta/2)\varphi - \chi/2)] + \\ & \quad b\cos[\Psi_x - (\nu + \Delta/2)\varphi - \chi/2)]\} \\ y(s) &= \sqrt{2\beta_y}\{c\cos[\Psi_y + (\nu + \Delta/2)\varphi + \chi/2)] + \\ & \quad d\cos[\Psi_y - (\nu - \Delta/2)\varphi + \chi/2)]\} \end{cases} \tag{12}$$

where

$$\nu = \frac{1}{2}\sqrt{\Delta^2 + |C^-|^2} \tag{13}$$

$$\begin{cases} \frac{c}{a} &= \frac{|C^-|}{2\nu + \Delta} \\ \frac{b}{d} &= -\frac{|C^-|}{2\nu + \Delta} \end{cases} \tag{14}$$

According to Eq. (12), the eigentunes are

$$\begin{cases} Q_I &= Q_{x,0} - \frac{1}{2}\Delta + \frac{1}{2}\sqrt{\Delta^2 + |C^-|^2} \\ Q_{II} &= Q_{y,0} + \frac{1}{2}\Delta - \frac{1}{2}\sqrt{\Delta^2 + |C^-|^2} \end{cases} \tag{15}$$

The fractional eigentune split is

$$|Q_I - Q_{II} - p| = \sqrt{\Delta^2 + |C^-|^2} \tag{16}$$

Comparing Eq. (12) to Eq. (1),

$$\begin{cases} R_I &= \sqrt{\frac{\beta_y}{\beta_x}}\cdot\frac{|C^-|}{2\nu + \Delta} \\ R_{II} &= \sqrt{\frac{\beta_x}{\beta_y}}\cdot\frac{|C^-|}{2\nu + \Delta} \end{cases} \tag{17}$$

$$\begin{cases} \Delta\phi_I &= \chi \\ \Delta\phi_{II} &= \pi - \chi \end{cases} \tag{18}$$

Explanations

The action-angle parameterization approach gives the strict expressions of the amplitude ratios and the phase differences. This can be used to calculate the 4 observables numerically. However, for the weak coupling, Eq. (17) and Eq. (18) from the Hamiltonian perturbation theory are more convenient than these from strict matrix approach.

According to Eq. (17), when the coupling gets weaker, that is, $|C^-|$ gets smaller, the amplitude ratios R_I and R_{II} get smaller. When $|C^-| = 0$, $R_I = R_{II} = 0$. And it is noticed that $R_I R_{II}$ is independent of local β functions. Knowing the measured eigentune split and R_I, R_{II}, the uncoupled tune split A and the coupling coefficient amplitude $|C^-|$ can be determined,

$$|C^-| = \frac{2\sqrt{R_I R_{II}}}{1 + R_I R_{II}} |Q_I - Q_{II} - p|, \qquad (19)$$

$$\Delta = \frac{1 - R_I R_{II}}{1 + R_I R_{II}} (Q_I - Q_{II} - p). \qquad (20)$$

According to Eq. (18), the phase difference $\Delta\phi_I$ is the phase of the coupling coefficient C^-. From Eq. (11), the phase χ of coupling coefficient is only decided by the strength combination of the skew quadrupoles. That is, if the combination of the skew quadrupole strengths is the right combination for the global decoupling, the phase differences $\Delta\phi_I$ and $\Delta\phi_{II}$ should be constant. The correction coupling coefficient's phase should be $(\pi + \chi_{meas})$. χ_{meas} is the total coupling's phase, $\chi_{meas} = \Delta\phi_I$.

Knowing the measured phase differences, the right combination of the correctionskew quadrupoles or families can be calculated from the optics model according to Eq. (11). Therefore, phase differences $\Delta_{I,II,0}$ hint a possible global decouping feedback. The key issue is how to measure the 6 coupling observables on the ramp.

MEASUREMENT WITH PLL

The PLL system [1] is chosen instead of the beam position monitor (BPM) to measure the six coupling parameters. The combination of good pickup sensitivity and narrow bandwidth permits to continuously track tune with tolerable emittance blowup. In the classical PLL tune tracker implementation, the horizontal plane is configured to track eigenmode **I** and the vertical tracks eigenmode TI. However, there is nothing that prevents tracking the projections of both eigenmodes in both planes. The reconfiguration of two planes of the present PLL **data** acquisition to accomplish tracking a single eigenmode in both planes is shown in Figure 5.

In the present RHIC PLL, to track the projections of both eigenmodes in both planes requires dedicating all four planes of **data** acquisition to a single ring, leaving the other ring without a PLL tune measurement system during the duration of the desired studies. In the baseband system presently under development[2], the phase-synchronous demodulation will be accomplished entirely

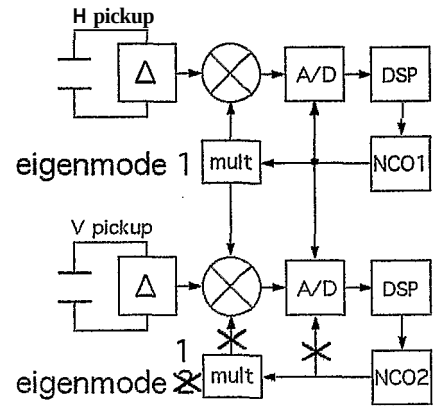

Figure 5: PLL setup to measure eigenmode projections

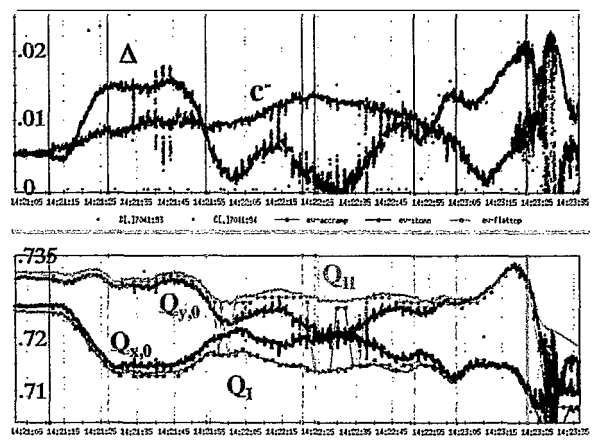

Figure 6: Tune and coupling data from ramp 7041

in the digital domain, unlike the present system, which requires independent phase-synchronous mixers.

A variety of measurements have been completed during RHIC beam experiments using the configuration shown in Figure **5.** Decoupling scans such as those illustrated in Figs. 1 thru 4 have been completed. **A** presentation of the data in a form most familiar to the accelerator physicist is easily obtained by using four of the ***six*** measured parameters to calculate the coupling coefficient and uncoupled tune split via Eqs. (19) and (20). From these, Eq. (15) can be solved to yield the unperturbed 'set' tunes. Data taken during a portion of a RHIC acceleration ramp and evaluated in this manner is shown in Figure 6. This data was taken during the polarized proton run, when a working point favorable to polarization was selected above the half-integer, unlike the working point below the half-integer that was used in the Copper run and mentioned in the previous simulation section of this paper.

The lower image shows the measured eigentunes Q_I (blue continuous trace) and Q_{II} (green continuous trace), as well as the same eigentunes measured at 2 second intervals by the kicked tune system (purple and grey dots). The

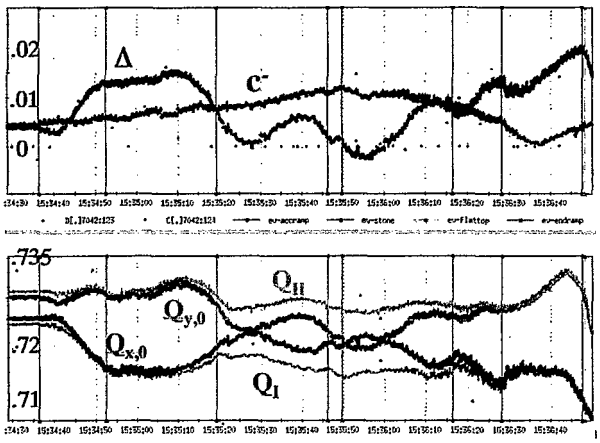

Figure 7: Tune and coupling data from ramp 7042

upper image shows the coupling coefficient (red) and uncoupled tune split (black), calculated as described above. From these, the fractional portion of the unperturbed 'set' tunes $Q_{x,0}$ (black) and $Q_{y,0}$ (red) are calculated and displayed in the lower image. We see that for the first 40 seconds of the ramp the machine is reasonably well decoupled, and the tune split is due almost entirely to the uncoupled tune split. For the next minute or so the coupling becomes large, at times so large that the tune split is due entirely to the coupling. And for the last 30 seconds of data the machine is again reasonably well decoupled. During the interval in which the coupling is large, the PLL continues to track the correct eigenmodes, however the kicked tune measurement clearly becomes confused regarding which plane corresponds to which eigenmode. It is also interesting to note that while the PLL tune measurement is apparently unperturbed by the firing of the tune kicker every two seconds, the coupling measurement is strongly affected by the resulting coherent motion. Strong dependence of coupling on orbit has been independently observed in RHIC. Data taken in the ramp immediately after that shown in Figure **6** is presented in Figure **7.**

This data demonstrates that the measurement is repeatable. The kicked tune system did not operate for this ramp, and the absence of the resulting perturbation to the coupling is quite evident.

CONCLUSION

A method to continuously measure both prajections of both eigenmodes has been developed, as has been a proper formalism to parameterize these measurements. Simulations have been carried out to investigate the behavior of the resulting six parameters during 2-D skew quadrudrupole scans. Analytical derivations of these parameters were presented, both via the linear coupling action-angle minimization and via the Hamiltonian perturbation theory, The amplitude ratios were found to be favorably sensitive around the globally uncoupled point. From the eigentune split and the amplitude ratios, the uncoupled tunes and the coupling coefficient can be determined. Data from two RHIC ramps was presented, showing the eigentunes and these uncoupled tunes and coupling coefficients. It was shown that the phase differences tell the decoupling directions, or the coupling coefficient's angle. From the phase difference measurement, one can combine the correction skew quadrupole strengths and scan them to reach the globally uncoupled point. In summary, both a technique and a formalism have been demonstrated for measurement and correction of coupling via non-perturbative observation of all projections of the eigenmodes.. Efforts to implement this development in normal operations are underway.

REFERENCES

[1] P. Cameron, et al, RHIC Third Generation PLL Tune Measurement System, PAC 2003. http://epaper.kek.jp/p03/PAPERS/ROAB009.PDF

[2] `http://www.agsrhicliome.bnl.gov/LARP/0504`

[3] R. Jones et al, Towards a Robust Phase Locked Loop Tune Feedback System, C-A/AP/204. http://www.cadops.bnl.gov/AP/ap_notes/cad_ap_index.html

[4] Y. Luo, et al, ***Possible phase loop for the global betatron decoupling,*** C-A/AP/174. http://www.cadops.bnl.gov/AP/ap_notes/cad_ap_index.html

[5] D. Edwards, L. Teng, PAC 1973, **p.885.**

[6] D. Sagan, D. Rubin, Phys. Rev. ST Accel. Beam 2,074001 (1999).

[7] **Y.** Luo, Phys. Rev. ST Accel. Beam 7,124001 (2004).

[8] ***G.*** Guignard, CERN Report No. 76-06, 1976,

[9] G. Guignard, Phys. Rev. E **51**, p6104, 1995.

[IO] H. Wiedemann, Particle Accelerator Physics II, Nonlinear and Higher-Order Beam Dynamics, Springer-Verlag, 1995.