BROOKHAVEN
NATIONAL LABORATORY

BNL-74871-2005-CP

Advances Towards the Measurement and Control of LHC Tune and Chromaticity

P. Cameron, J. Cupolo, C. Degen, A. Dellapenna, L. Hoff, J. Mead, R. Sikora

Presented at the 7th European Workshop on Beam Diagnostics and Instrumentation for Particle Accelerators (DIPAC 2005)
Lyon, France
June 6-8, 2005

Collider-Accelerator Department

Brookhaven National Laboratory
P.O. Box 5000
Upton, NY 11973-5000
www.bnl.gov

Managed by
Brookhaven Science Associates, LLC
for the United States Department of Energy under
Contract No. DE-AC02-98CH10886

This is a preprint of a paper intended for publication in a journal or proceedings. Since changes may be made before publication, this preprint is made available with the understanding that it will not be cited or reproduced without the permission of the author.

DISCLAIMER

This report was prepared as an account of work sponsored by an agency of the United States Government. Neither the United States Government nor any agency thereof, nor any of their employees, nor any of their contractors, subcontractors or their employees, makes any warranty, express or implied, or assumes any legal liability or responsibility for the accuracy, completeness, or any third party's use or the results of such use of any information, apparatus, product, or process disclosed, or represents that its use would not infringe privately owned rights. Reference herein to any specific commercial product, process, or service by trade name, trademark, manufacturer, or otherwise, does not necessarily constitute or imply its endorsement, recommendation, or favoring by the United States Government or any agency thereof or its contractors or subcontractors. The views and opinions of authors expressed herein do not necessarily state or reflect those of the United States Government or any agency thereof.

ADVANCES TOWARDS THE MEASUREMENT AND CONTROL OF LHC TUNE AND CHROMATICITY*

Peter Cameron, John Cupolo, Christopher Degen, Al Dellapenna, Lawrence T. Hoff, Joe Mead, Robert Sikora, BNL, Upton, NY 11973, USA
Marek Gasior, Rhodri Jones, Hermann Schmickler, CERN, Geneva, Switzerland
Cheng-Yang Tan, FNAL, Batavia, IL 60439, USA

Abstract

Requirements for tune and chromaticity control in most superconducting hadron machines, and in particular the LHC, are stringent. In order to reach nominal operation, the LHC will almost certainly require feedback on both tune and chromaticity. Experience at RHIC has also shown that coupling control is crucial to successful tune feedback [1]. A prototype baseband phase-locked loop (PLL) tune measurement system has recently been brought into operation at RHIC as part of the US LHC Accelerator Research Program (LARP) [2]. We report on the performance of that system and compare it with the extensive accumulation of data from the RHIC 245MHz PLL [3].

INTRODUCTION

Tune Feedback was formally accepted as a LARP task in 2003. For two years prior to that time there existed a bilateral collaboration between CERN and BNL for the purpose of research into the development and refinement of reliable tune feedback, as well as the associated development of means for improved control of chromaticity and coupling. Significant progress has been made as a result of these collaborative efforts.

The LHC Specifications for Tune, Chromaticity, and Coupling Measurement are clearly defined [4]. To meet these specifications requires improvement upon the performance of the present RHIC 245MHz PLL tune measurement system. Limitations of the present system arise from the dynamic range requirements imposed by transition crossing in RHIC, and from the effect of coupling on the tune feedback loop. Recent advances [1,5] are addressing these limitations, and prospects appear favourable for reliable operational tune feedback, both at RHIC and in the LHC.

TUNE MEASUREMENT AND FEEDBACK

We present results from the present RHIC 245MHz PLL and a prototype baseband PLL, as well as plans for the proposed LHC baseband system.

245MHz PLL

The RHIC 245MHz PLL system is mature. It has proven useful for tune and chromaticity measurements, particularly during ramping, as well as for a variety of accelerator physics experiments. Figure 1 shows typical tune data for a RHIC ramp during the 2004 Gold run.

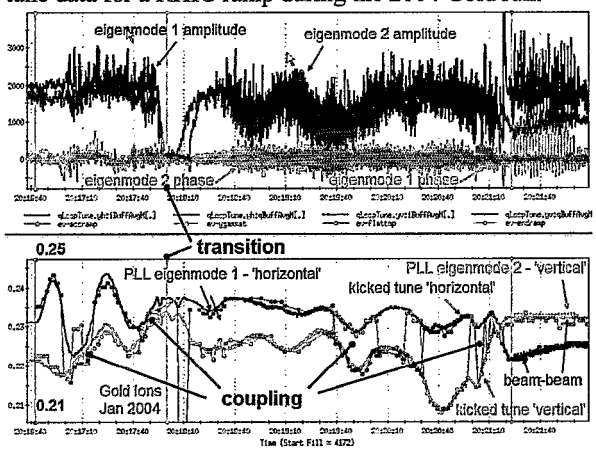

Figure 1: PLL tune tracking during a RHIC ramp.

The lower portion of the figure shows tunes as measured by both the PLL and the conventional kicked tune measurement system during the 5 minute ramp. It can be seen that, as a result of coupling, the kicked tune measurement hops back and forth between the eigenmodes tracked by the PLL. The upper portion of the figure shows the PLL amplitudes and phases. Despite feedback within the PLL on both kicker excitation and signal path gain, the amplitudes are driven to zero around transition. This results from bunch lengths becoming short near transition, which extends the coherent spectrum of the bunches in the 28MHz acceleration buckets up into the passband of the 245MHz resonant pickups. In addition, there are fast orbit changes around transition. These circumstances create a dynamic range problem that frequently results in the failure of PLL tune tracking. This problem is being addressed by the Direct Diode Detection analog front end [5].

Figure 2 shows data from a RHIC ramp with tune feedback on during the 2004 polarized proton run. This was the last of ~25 ramps that were attempted with tune feedback over the course of 3 years. The success rate for ramps with tune feedback was ~50%. Given the great potential benefit of reliable tune feedback during normal operations, this success rate was sufficient to justify continued attempts until the obstacles were fully understood. The first obstacle was the dynamic range problem at transition, as mentioned in the previous paragraph. This problem was understood early on for ion

*Work supported by US LARP and US DOE

beams, and did not prevent attempts with protons, which are above transition at injection.

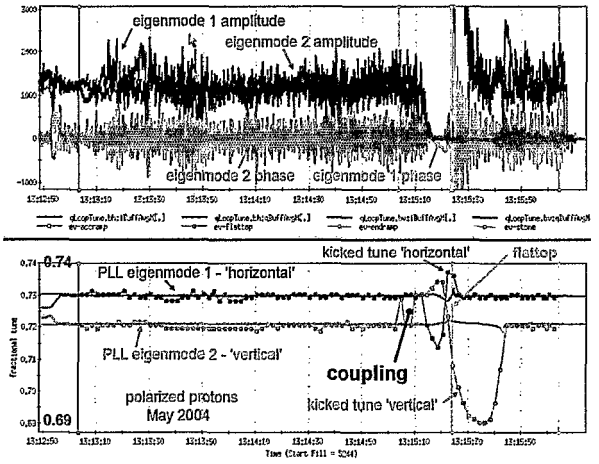

Figure 2: Ramp with Tune Feedback.

Figure 2 makes clear the second obstacle to successful tune feedback. Referring back to Figure 1, it was noted that the PLL successfully tracked the eigenmodes while the kicked tune was hopping between eigenmodes as a result of coupling. In that instance the effect of coupling on PLL performance was relatively benign. In Figure 2 the situation is complicated by the presence of the tune feedback loop, and the effect of coupling in this instance is not benign.

Coupling rotates the eigenmodes. When this rotation is greater than 45 degrees, the tunes are said to have 'crossed'. The PLL is capable of tracking an eigenmode well beyond that point, and feeds this tune data to the magnet control, data which at that point corresponds to the wrong plane. This drives the tune feedback loop unstable. The signature we had expected from coupling was that the tunes would be gradually and uncontrollably driven apart by the coupling. With the data in Figure 2 we understood that we were looking for the wrong signature, that the situation could not progress to that point, but rather that the tune feedback loop would suddenly and catastrophically break the moment the eigenmodes rotated more than 45 degrees. With this understanding, no further tune feedback loops were attempted, and our attention was instead focused on coupling measurement and correction. As a result of that effort, we now believe that the coupling problem is well in hand, as reported elsewhere in these proceedings [1].

It is interesting to note that the behaviour of the amplitudes in Figures 1 and 2 is very similar. During the 2004 run there were large and fast orbit shifts at the PLL pickup during ramping, resulting from beam separation bumps at the IPs to minimize the effects of beam-beam. This contributed to the confusion in understanding the role of coupling in breakage of the tune feedback loop. Our impression was that the orbit shifts were driving the pickups at the revolution line, resulting in suppression of the amplitude by the feedback loop on signal path gain. In reality, the vertical orbit shifts in the sextupoles were introducing the coupling which drove the tune feedback loop unstable.

Prototype Baseband PLL

With the advent of significant improvement in the sensitivity of betatron tune measurement [5], it has become advantageous to work at baseband. Direct Diode Detection analog front ends (3D AFEs) have been designed and fabricated at CERN, and installed in the PS and SPS, as well as the Tevatron at FNAL and RHIC at BNL.

The early experience with these AFEs revealed the presence of harmonics of the mains frequency in the vicinity of the betatron resonance. The origin and effect of these lines is discussed elsewhere in these proceedings [6]. The fact that this excitation of the beam had for the most part gone unnoticed through the entire history of accelerators and storage rings, but was immediately and seriously evident at each of the installations, is a clear demonstration of the excellent sensitivity of this new AFE. The presence of this excitation in the betatron spectrum disrupts PLL operation, and is a serious threat to the implementation of successful tune feedback at RHIC and the LHC.

While the focus on this unexpected problem has slowed the baseband PLL development effort, some progress has been made. Utilizing a commercial lock-in amplifier, a phase loop was closed on the beam. Operation of this system has shown:

- With a given S/N, emittance growth is less with the baseband system.
- The qualitative observation is that tune tracking performance is superior to that of the 245MHz system, even at this early stage. This has not been systematically quantified, due to higher priorities as well as lack of a proper interface to the Control System.
- No bleedthru was observed from kicker to pickup.
- Dynamic range is excellent - no sign of saturation around transition in RHIC

And finally, an observation from the Tevatron:

- S/N of 3D AFE was 10 to 20dB better than that of the 21.4MHz 'Schottky' pickup.

The baseband system at RHIC is presently being moved away from the lock-in amplifier and re-implemented using VME modules. This is expected to provide greater flexibility in system operation, data archiving needed to properly quantify system performance, and other benefits. We expect to have this running before RHIC beam goes off at the end of June.

The LHC Baseband System

There were two primary considerations in the development of the system architecture for the LHC baseband system. The first consideration was to have an architecture with maximum commonality between the implementations at RHIC and the LHC. The primary difficulty here was that the VME operating system at

RHIC is VxWorks, whereas at the LHC it is LynxOS. The second consideration was to have the maximum commonality between the baseband system and other LHC beam instrumentation systems, to minimize the amount of specialist knowledge needed to commission and operate this system.

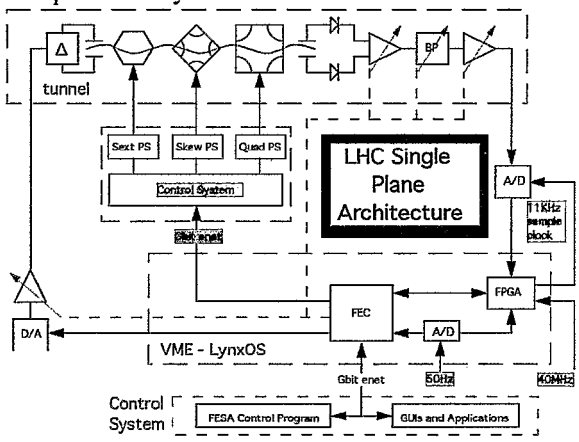

Figure 3: LHC Single Plane Architecture.

With the architecture shown in Figure 3 the gate array code is essentially identical between RHIC and LHC. Similarly, the front-end computers will utilize operating-system independent libraries developed in the C programming language. VME hardware and functionality will either reside on or be implemented in the DAB board utilized in many other LHC instrumentation system.

CHROMATICITY

PLL-based chromaticity measurement during ramping in RHIC is accomplished by measuring the tune modulation resulting from 1Hz modulation of the beam momentum. A momentum modulation depth of +/- 10^{-4} gives a +/- 100μ radial modulation. During RHIC operations neither beam loss nor emittance growth has been identified as resulting from this modulation.

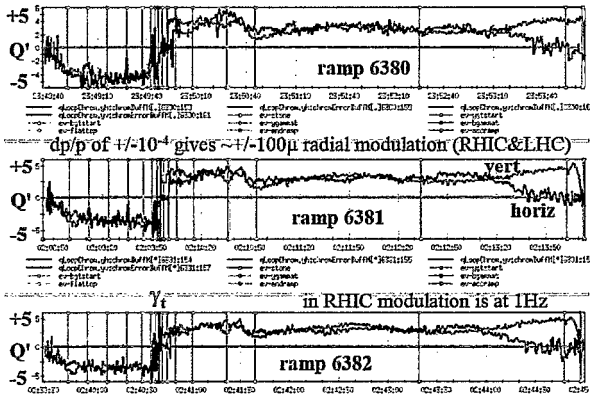

Figure 4: Chromaticity Measurement on the Ramp

Figure 4 shows chromaticity measurements on 3 successive ramps during the 2005 copper run. Understandably, the quality of the data is questionable around transition. Measurement fluctuations for values near zero result from the inability of the chromaticity algorithm to properly determine sign. In principle it should be possible to overcome this difficulty. In its present form, the quality of this measurement approximates that needed to meet the LHC specification at commissioning.

CONCLUSION

The status of the LARP efforts to meet the requirements of the LHC Specification was recently reviewed [7]. The opening summary of the report from that review states "The Collaboration between LARP and CERN has demonstrated prototype hardware and system architecture that has the potential to satisfy the LHC tune tracker/feedback system requirements. Team members have established the rapport that enables a successful collaboration." We reported here on some details of the progress that has resulted in this favourable assessment of the prospects for PLL-based tune and chromaticity measurement and control in the LHC. The most significant progress has been made in two areas - the Direct Diode Detection analog front end and PLL-based coupling measurement and control. With these improvements in hand, we feel that there is a good possibility that the LARP/CERN Tune Feedback effort will make a substantial contribution to the commissioning and operation of the LHC. The problem of mains excitation of the betatron spectrum is now the highest priority.

REFERENCES

[1] R. Jones et al, "Towards a Robust Phase Locked Loop Tune Feedback System ", these proceedings.

[2] see http://www.agsrhichome.bnl.gov/LARP/

[3] P. Cameron et al, "RHIC Third Generation PLL Tune Measurement System", PAC 2003.

[4] S. Fartoukh and J.P Koutchouk, "On the Measurement of the Tunes, Coupling, & Detuning with Momentum and Amplitude in LHC", LHC-B-ES-004, Feb. 2004.

[5] M. Gasior and R. Jones, "High Sensitivity Tune Measurement by Direct Diode Detection", these proceedings.

[6] P. Cameron et al, "The Effects and Possible Origins of Mains Ripple in the Vicinity of the Betatron Spectrum", these proceedings.

[7]http://www.agsrhichome.bnl.gov/LARP/050404_Tune_Feedback/