BNL-75894-2006-CP

Nuclear Databases for Reactor Applications

B. Pritychenko[1], R. Arcilla, T. Burrows, M.W. Herman, S. Mughabghab, P. Oblozinsky, D. Rochman, A. A. Sonzogni, J. Tuli and D.F. Winchell

National Nuclear Data Center, Brookhaven National Laboratory
Upton, NY 11973-5000, U.S.A.

Presented at PHYSOR-2006
Vancouver, BC, Canada
American Nuclear Society's Topical Meeting on Reactor Physics
Organized and hosted by the Canadian Nuclear Society
2006 September 10-14

May 2006

Energy Science & Technology Department
National Nuclear Data Center
Brookhaven National Laboratory
P.O. Box 5000
Upton, NY 11973-5000
www.bnl.gov

Notice: This manuscript has been authored by employees of Brookhaven Science Associates, LLC under Contract No. DE-AC02-98CH10886 with the U.S. Department of Energy. The publisher by accepting the manuscript for publication acknowledges that the United States Government retains a non-exclusive, paid-up, irrevocable, world-wide license to publish or reproduce the published form of this manuscript, or allow others to do so, for United States Government purposes.

This preprint is intended for publication in a journal or proceedings. Since changes may be made before publication, it may not be cited or reproduced without the author's permission.

DISCLAIMER

This report was prepared as an account of work sponsored by an agency of the United States Government. Neither the United States Government nor any agency thereof, nor any of their employees, nor any of their contractors, subcontractors, or their employees, makes any warranty, express or implied, or assumes any legal liability or responsibility for the accuracy, completeness, or any third party's use or the results of such use of any information, apparatus, product, or process disclosed, or represents that its use would not infringe privately owned rights. Reference herein to any specific commercial product, process, or service by trade name, trademark, manufacturer, or otherwise, does not necessarily constitute or imply its endorsement, recommendation, or favoring by the United States Government or any agency thereof or its contractors or subcontractors. The views and opinions of authors expressed herein do not necessarily state or reflect those of the United States Government or any agency thereof.

Nuclear Databases for Reactor Applications

B. Pritychenko[1], R. Arcilla, T. Burrows, M.W. Herman, S. Mughabghab, P. Oblozinsky, D. Rochman, A. A. Sonzogni, J. Tuli and D.F. Winchell

National Nuclear Data Center, Brookhaven National Laboratory
Upton, NY 11973-5000, U.S.A.

Abstract

The National Nuclear Data Center (NNDC): An overview of nuclear databases, related products, nuclear data Web services and publications.
KEYWORDS: Nuclear Reactions, Nuclear Data Dissemination, Internet

1. Introduction

Nuclear data activities started at Brookhaven National Laboratory (BNL) in 1951 in a group that would become the National Nuclear Data Center (NNDC) in 1977. The NNDC collects, evaluates, and disseminates nuclear physics data for basic research and applied nuclear technologies [1, 2].

The NNDC maintains and contributes to the nuclear reaction (ENDF, CSISRS) and nuclear structure databases along with several others databases (CapGam, MIRD, IRDF-2002) and provides coordination for the Cross Section Evaluation Working Group (CSEWG) and the US Nuclear Data Program (USNDP). The Center produces several publications and codes such as Atlas of Neutron Resonances [3], Nuclear Wallet Cards booklets [4, 5] and develops codes, such as nuclear reaction model code Empire [2].

2. NNDC Computer Environment

The NNDC has been providing remote electronic access to its databases and other information since 1986. In order to improve the quality of nuclear data services and take advantage of latest software and hardware developments, NNDC started a nuclear database migration project in 1999.

New Web interfaces were integrated with Sybase relational databases and Nuclear Data Portal http://www.nndc.bnl.gov was launched on April 19, 2004 [2]. The new NNDC computer network is shown schematically in Figure 1.

[1] Corresponding author, Tel. 631-344-5091, Fax. 631-344-2806, E-mail: pritychenko@bnl.gov

Figure 1. Schematic view of the NNDC database computer system. New nuclear data content is propagated from primary (A) to secondary (B) database server, which is connected to the Web server (D). Working server (C) is mostly used as Java testing and development environment.

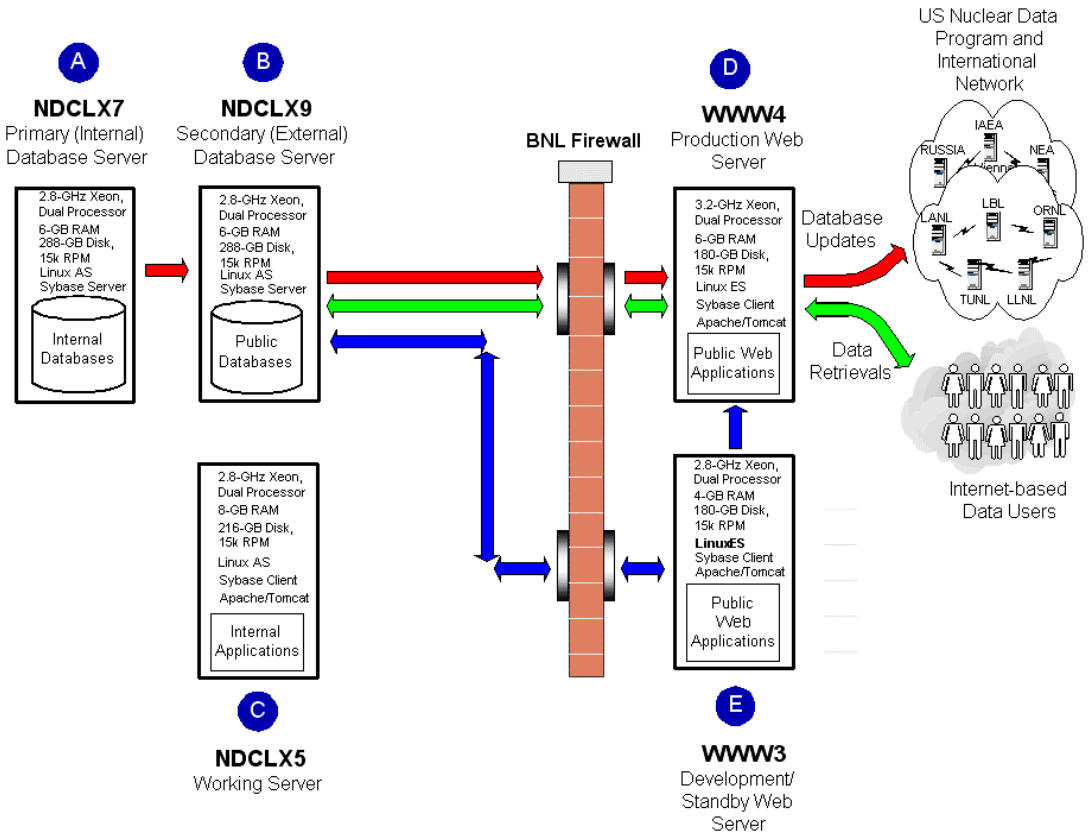

New Web interfaces integrated with relational databases create a Nuclear Data Portal, which gives users access to all Web and database applications. The Nuclear Data Portal contains nuclear reaction, decay and structure data, as well as bibliographical information. Its major features are:

- A new generation of nuclear data services using new hardware architecture based on robust and scalable DELL servers running Linux and relational database software (Sybase)
- Java solutions for Web applications
- Easy to navigate, active Graphic User Interfaces (GUI)
- A Google search engine and site index for NNDC documents
- Web interfaces for nuclear databases
- On-line query forms for information searches; results are presented in tables and interactive plots
- Numerous nuclear science tools, codes, applications, and links

Shown in Figure 2, the Nuclear Data Portal is tightly integrated with nuclear reaction (CSEWG) and structure (USNDP) evaluations and compilation efforts.

Figure 2. Front page of the NNDC Web Services (www.nndc.bnl.gov). All elements of the page, including graphic images, are hyperlinked.

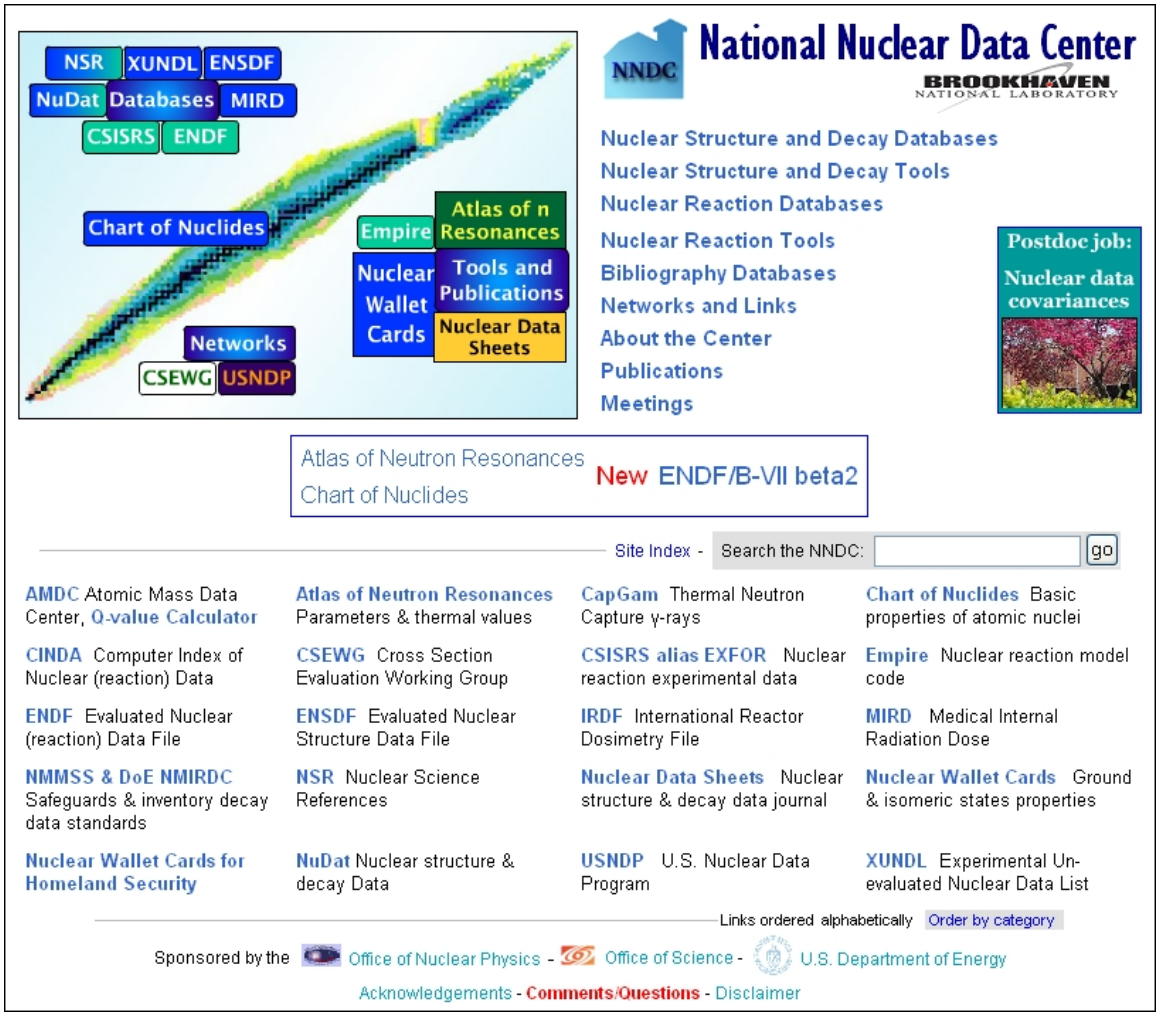

The new Web-based nuclear data retrieval system generated positive response from nuclear data users. This system produced a two-fold increase in the NNDC Web data retrievals compared with the previous service. Figure 3 summarizes results for Web data retrievals over the last 20 years. If this trend continues, there will be over 900 K retrievals and it is expected that the NNDC nuclear data retrieval system will meet anticipated growing demands in the future.

Figure 3. Electronic nuclear data retrievals from the NNDC over the last 20 years.

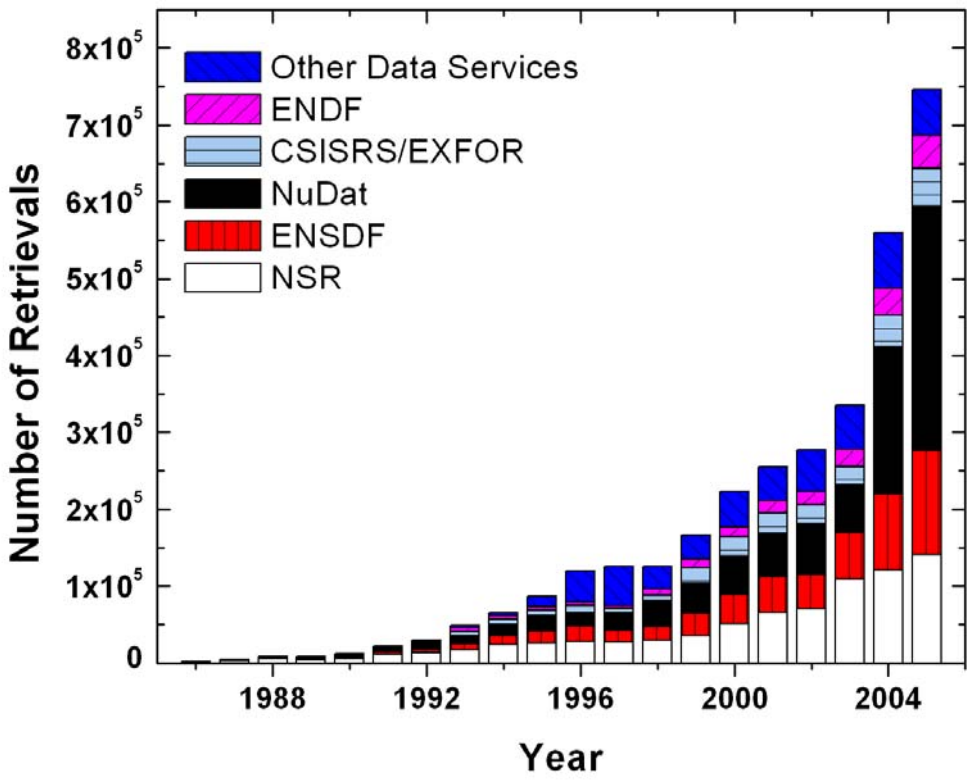

3. Nuclear Databases

Nuclear data services were substantially improved providing better access to reaction data evaluations and compilations [2]. New Web interfaces for the Evaluated Nuclear Data File (ENDF) and the nuclear reaction experimental data (CSISRS/EXFOR) provide a wide range of options for data retrievals and analysis using standard and interpreted text formats as well as graphic tools. New nuclear reaction services differentiate themselves by the simple creation of on-line database queries and the extensive use of graphics. A brief description of the nuclear databases is presented below.

3.1 Evaluated Nuclear (reaction) Data File

The ENDF reaction database contains recommended data from the United States ENDF/B-VI.8 and the soon-to-be released ENDF/B-VII library. ENDF Web interface

also provides access to other evaluated nuclear reaction libraries: JEFF-3.1, JENDL-3.3, BROND, and CENDL.

At the present time, the ENDF nuclear reaction database is under new development. ENDF/B-VII library verification includes ENDF checking codes: CHECKR, FIZCON, PSYCHE, STANEF and the processing of data files with NJOY-99.125 and Monte Carlo Neutron Transport (MCNP) codes. Checking codes, NJOY and MCNP are used to verify that all evaluated data are confirmed to ENDF-6 format. ERRORJ is used for processing the new covariance data. Processed files are loaded into the Sybase relational database and are accessible on Web. The latest version of the library, ENDF/B-VII beta2 was released on April 25, 2006 by CSEWG. Web interface for ENDF/B-VII beta2 is shown in Figure 4.

Figure 4. ENDF/B-VII beta2 Web interface (http://www.nndc.bnl.gov/endf2).

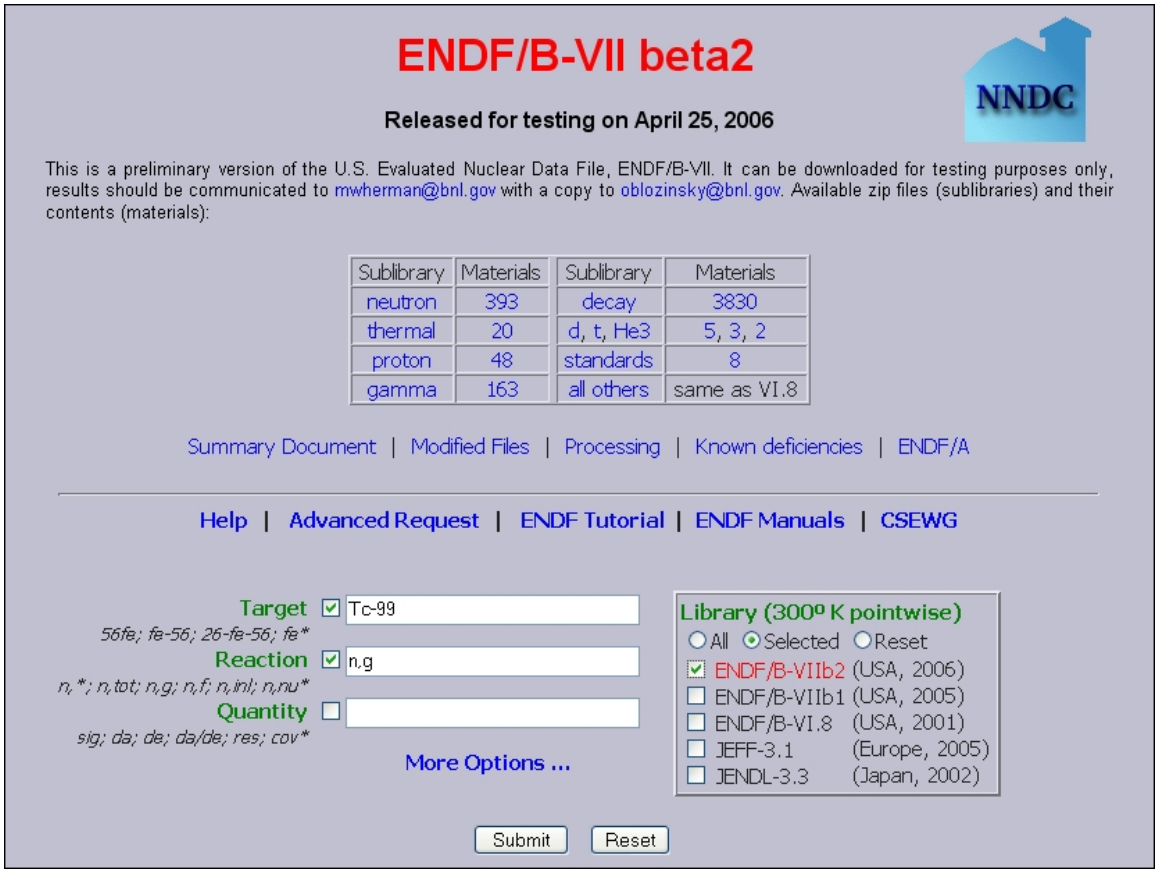

ENDF/B-VII beta2 library contains neutron cross sections for 393 materials relevant to nuclear technology. This library also includes 8 nuclear data standards, 20 thermal scattering, 48 proton, 163 photo-nuclear, 3830 decay and 10 charged-particle (non-proton) evaluations. Figure 6 shows evaluated (n,γ) cross section for the important fission product ^{157}Gd with thermal cross section of 254000 (815) b [3]. We expect that the final version of the ENDF/B-VII library and a new Web application will be available in 2006.

Figure 5. ENDF/B-VII evaluated cross section for ^{157}Gd(n,γ) reaction.

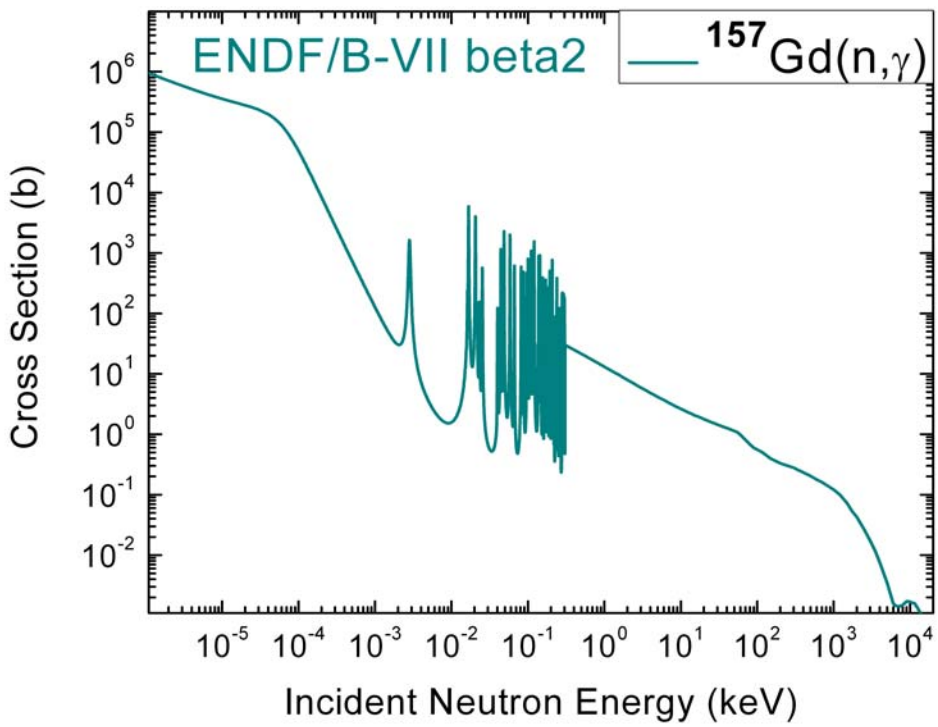

3.2 Experimental Nuclear Reaction Data

Cross Section Information Storage & Retrieval System (CSISRS), alias EXFOR (EXchange FORmat) [1, 2] contains experimental nuclear reaction data for incident neutrons, charged particles, and photons. It includes more than 15500 experiments and covers nearly all of neutron-induced reaction experimental data up to the pion threshold. The library is less complete for charged particle induced reactions (in general A < 12) and photon experiments. In recent years, the number of charged particle compilations is increasing faster than others. The content of the CSISRS database, serves as a principal input for ENDF nuclear data evaluations.

3.3 Other Databases

The thermal neutron capture γ-ray database (http://www.nndc.bnl.gov/capgam) provides energies and intensities of γ-rays for nuclear reactor heat calculations. CapGam database contains thermal neutron capture γ-ray information on 256 target nuclides of interest up to 12 MeV in energy. Database content, produced from the Evaluated Nuclear

Structure Data File (ENSDF), is searchable by isotope or γ-ray energy.

Medical Internal Radiation Dose database (http://www.nndc.bnl.gov/mird) contains recommended nuclear decay data for over 2100 radionuclides extracted from ENSDF, processed by the program RadList and presented in the Medical Internal Radiation Dose format.

The International Reactor Dosimetry File: IRDF-2002 is a standardized, updated, and benchmarked evaluated cross section library of neutron dosimetry reactions with uncertainty information for use in lifetime management assessments of nuclear power reactors and other neutron metrology applications such as boron neutron capture therapy, therapeutic use of medical isotopes, nuclear physics measurements, and reactor safety applications (http://www.nndc.bnl.gov/nndcscr/libraries/irdf/).

4. Publications & Codes

Atlas of Neutron Resonances reference book (http://www.nndc.bnl.gov/atlas/) represents the 5th edition of BNL-325 and was published by Elsevier on April 17, 2006 [3]. It contains evaluated neutron data for 98 elements and 486 ground and isomeric states of 476 isotopes (381 isotopes with resonance data) and represents one of the most comprehensive thermal, resonance, and unresolved energy regions neutron data resources. All nuclear data evaluations and compilations were conducted at the National Nuclear Data Center, Brookhaven National Laboratory. The cover of Atlas of Neutron Resonances is shown in Figure 6.

Figure 6. The cover of Atlas of Neutron Resonances reference book [3].

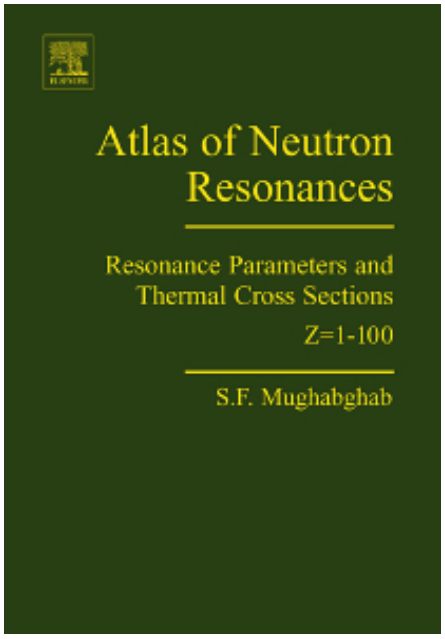

The Nuclear Wallet Cards publication, currently in its seventh edition, contains up-to-date information on properties of 5657 ground and isomeric states of all known nuclides (http:// www.nndc.bnl.gov/wallet). The sixth edition of Nuclear Wallet Cards [4] has been adopted by the U.S. Department of Energy, Nuclear Materials and Safeguards System as their decay data standard.

A version tailored for Homeland Security needs is also available [5]. Nuclear Wallet Cards for Radioactive Nuclides include nuclear properties of $T_{1/2}$ <= ~1 h nuclides and consists of two tables. The first one provides half-life, major radiations, and major γ-ray information for 737 nuclides. The second table contains information on 944 γ -rays and parent nuclides sorted by energy from 101 to 2951 keV.

EMPIRE (http:// www.nndc.bnl.gov/empire) is a modular system for advanced calculation of nuclear reactions using various theoretical models [1, 2]. It consists of a number of linked FORTRAN codes, input parameter libraries, and the experimental data library (CSISRS/EXFOR).

5. Conclusion and Outlook

The new National Nuclear Data Center Web portal (http://www.nndc.bnl.gov) is a result of the successful completion of the database migration project that was carried out by NNDC for U.S. Nuclear Data Program.

The portal brings together nuclear reaction and structure Web services, publications, and tools. It provides a unique access to many nuclear physics resources and creates a single site where nuclear data users can find tools and data to help solve science, industry and homeland security problems and challenges.

Acknowledgements

This work is supported by the Office of Nuclear Physics, Office of Science of the U.S. Department of Energy, under contract no. DE-AC02-98CH10886 with Brookhaven Science Associates, LLC. We are grateful to M. Blennau for a careful reading of the manuscript and useful discussions and suggestions.

References

1) National Nuclear Data Center, Available from: http://www.nndc.bnl.gov.
2) B. Pritychenko, A.A. Sonzogni, D.F. Winchell, V.V. Zerkin, R. Arcilla, T.W. Burrows, C.L. Dunford, M.W. Herman, V. McLane, P. Oblozinsky, Y. Sanborn, J.K. Tuli, *Nuclear Reaction and Structure Data Services of the National Nuclear Data Center*, Annals of Nuclear Energy **33** (2006) 390.
3) S.F. Mughabghab, *Atlas of Neutron Resonances*, *Resonance Parameters and Thermal Cross Sections*, Elsevier 2006.
4) J.K. Tuli, *Nuclear Wallet Cards*, Brookhaven National Laboratory, 2000.
5) J.K. Tuli, *Nuclear Wallet Cards for Radioactive Nuclides*, Brookhaven National Laboratory, 2004.