BROOKHAVEN
NATIONAL LABORATORY

BNL-77584-2007-CP

The Relativistic Heavy Ion Collider (RHIC) Cryogenic System at Brookhaven National laboratory: Review of the Modifications and Upgrades Since 2002 and Planned Improvements

R. Than and J. Tuozzolo
Brookhaven National Laboratory

A. Sidi-Yekhlef, V. Ganni, P. Knudsen, D. Arenius
Thomas Jefferson National Accelerator Facility
Newport News, VA 23606, USA

Presented at the CEC-ICMC 2007
(Cryogenic Engineering Conference and International Cryogenic Materials Conference))
Chattanooga, Tennessee, USA
July 16-20, 2007

July 2007

Collider-Accelerator Department

Brookhaven National Laboratory
P.O. Box 5000
Upton, NY 11973-5000, USA
www.bnl.gov

Notice: This manuscript has been authored by employees of Brookhaven Science Associates, LLC under Contract No. DE-AC02-98CH10886 with the U.S. Department of Energy and by a sponsored research grant from Renaissance Technologies. The publisher by accepting the manuscript for publication acknowledges that the United States Government retains a non-exclusive, paid-up, irrevocable, world-wide license to publish or reproduce the published form of this manuscript, or allow others to do so, for United States Government purposes.

This preprint is intended for publication in a journal or proceedings. Since changes may be made before publication, it may not be cited or reproduced without the author's permission.

DISCLAIMER

This report was prepared as an account of work sponsored by an agency of the United States Government. Neither the United States Government nor any agency thereof, nor any of their employees, nor any of their contractors, subcontractors, or their employees, makes any warranty, express or implied, or assumes any legal liability or responsibility for the accuracy, completeness, or any third party's use or the results of such use of any information, apparatus, product, or process disclosed, or represents that its use would not infringe privately owned rights. Reference herein to any specific commercial product, process, or service by trade name, trademark, manufacturer, or otherwise, does not necessarily constitute or imply its endorsement, recommendation, or favoring by the United States Government or any agency thereof or its contractors or subcontractors. The views and opinions of authors expressed herein do not necessarily state or reflect those of the United States Government or any agency thereof.

THE RELATIVISTIC HEAVY ION COLLIDER (RHIC) CRYOGENIC SYSTEM AT BROOKHAVEN NATIONAL LABORATORY: REVIEW OF THE MODIFICATIONS AND UPGRADES SINCE 2002 AND PLANNED IMPROVEMENTS

R. Than, J. Tuozzolo [1]
A. Sidi-Yekhlef, V. Ganni, P. Knudsen, D. Arenius[2]

[1]Brookhaven National Laboratory
Upton, NY 11973, USA

[2]Thomas Jefferson National Accelerator Facility
Newport News, VA 23606, USA

ABSTRACT

Brookhaven National Laboratory continues its multi-year program to improve the operational efficiency, reliability, and stability of the cryogenic system which also resulted in improved beam availability of the Relativistic Heavy Ion Collider (RHIC).

This paper summarizes the work and changes made after each phase over the past four years to the present, as well as proposed future improvements. Power usage dropped from an initial 9.4 MW to the present 5.1 MW and is expected to drop below 5 MW after the completion of the remaining proposed improvements.

The work proceeded in phases by balancing the Collider's schedule of operation, time required for the modifications and budget constraints. The main changes include process control, compressor oil removal and management, elimination of the use of cold compressors and two liquid helium storage tanks, insulation of the third liquid helium storage tank, compressor bypass flow reduction and the addition of a load turbine (Joule-Thompson expander) with associated heat exchangers at the cold end of the plant. Also, liquid helium pumps used for forced circulation of the sub-cooled helium through the magnet loops were eliminated by an accelerator supply flow reconfiguration. Planned future upgrades include the resizing of expanders 5 and 6 to increase their efficiencies.

KEYWORDS: helium, plant, refrigerator, liquefier, efficiency

INTRODUCTION

The original cryogenic plant built for the ISABELLE project was the same plant used, without modification, for cooling the Relativistic Heavy Ion Collider (RHIC). The ISABELLE refrigerator was designed for more than three times the RHIC load. The RHIC loads required the plant to operate at less than half the original design flows which contributed to a lower overall efficiency. Because the plant had not been in use since its decommissioning in the mid-1980s, many operational problems occurred during the initial years of its use for RHIC (1999-onward). In order to address these issues, beginning in 2002, the lab began a series of additions, modifications and upgrades that were implemented in several phases. Three of these phases have been completed.

Previous publications presented the cryogenic plant for the ISABELLE project [1, 2]. This paper summarizes the work that has been carried out during Phases I through III of the completed upgrades and outlines the proposed Phase IV upgrade. Phases I and II upgrades involved modifications to process control, compressor oil management, reconfiguration of the cold-end flow path, and discontinued use of the cold gas compressor [3]. Phases III A and B involved the discontinued use of the liquid helium circulators, as well as the addition of a Joule-Thompson expander and its associated new heat exchangers presented in a prior publication [4]. Phase IV proposes upgrading existing cold expanders 5 and 6 to smaller capacities for higher efficiencies.

PHASES I AND II

Phases I and II involved several changes that resulted in an initial power reduction as well as modifications done to resolve operational issues. FIGURE 1 shows the initial plant and control logic configuration. FIGURE 2 shows the changes made through Phase II. After Phase II, the system was operating with an input power of around 7.1 MW from about 9.4 MW initially, a power reduction of about 2.3 MW. In addition, because the rotating equipment does not have to run at maximum pressure continuously, the plant operates at a higher reliability. Furthermore, as the system tracks the load continuously, it responds quickly to any transients such as a magnet quench, resulting in a more stable system. The improved helium plant reliability, stability and flexibility have resulted in improved beam availability of the Relativistic Heavy Ion Collider [5].

Process Control Changes

Phases I and II included changes in process control philosophy in order to drastically improve overall plant efficiency (i.e., power reduction), reliability, and stability and to robustly handle upsets such as quenches, and compressor or expander trips. TABLE 1 summarizes the gas management control logic implemented during Phase II. A more detailed description of the Phase II process control logic has been previously published [3]. Phase II involved making changes to the process control logic to allow the plant's high side pressure to vary in response to changes in the load. By allowing the discharge pressure to float with the demand of the load, the compressor input power changes for efficient use. In addition, running at lower discharge pressures results in less wear and tear on the compressors.

The new control logic allows the inter-stage pressure to float as the mass flow demand of the coldbox changes matching second-stage compressor flow to the demand of the coldbox, and thereby minimizing compressor flow and lowering power consumption.

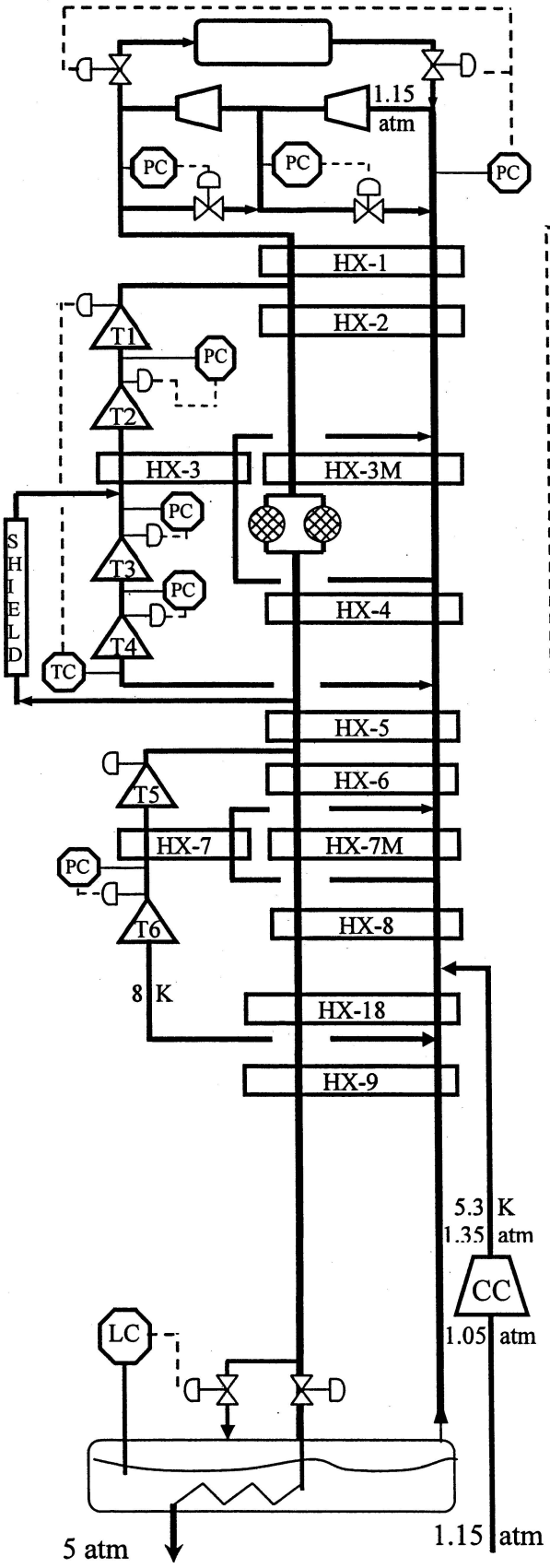

FIGURE 1. Configuration Pre-2003 Operation

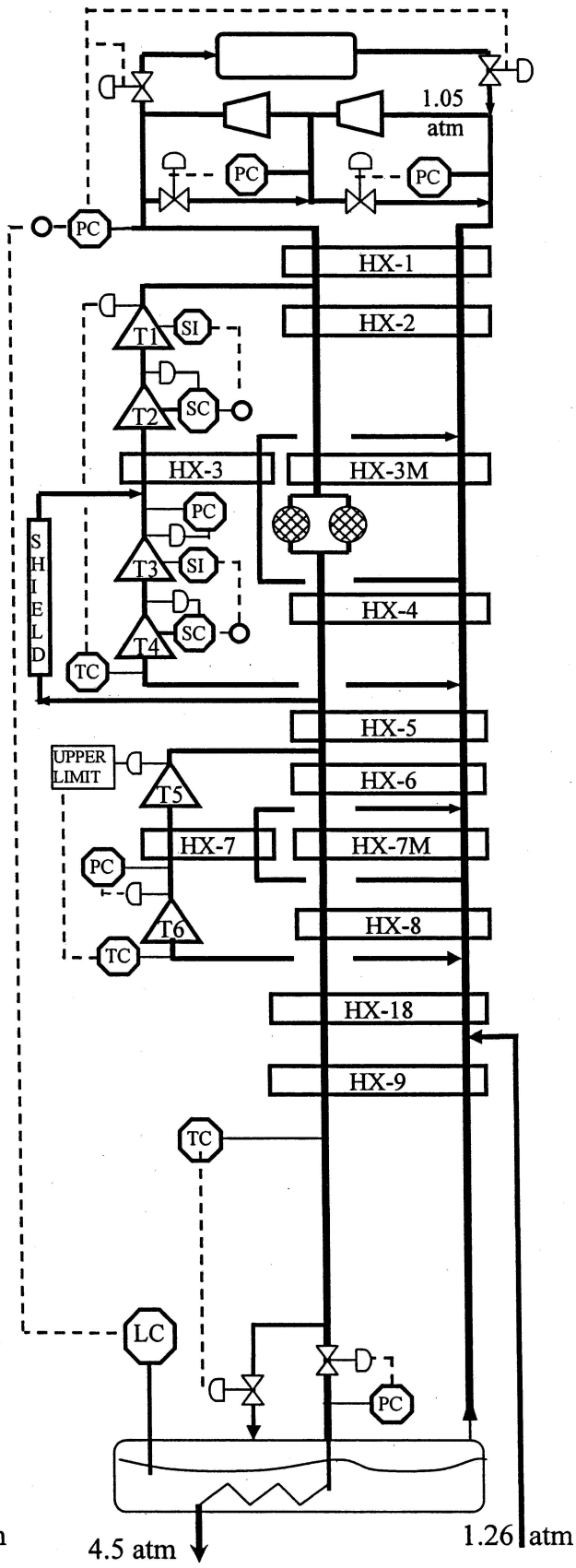

FIGURE 2. Configuration 2004/2005/2006 Operation

First stage suction pressure is controlled at 1.05 atm by the first stage bypass valve, leading to a stable low side pressure and stable boiling point in the Collider's recoolers. The first stage suction pressure is allowed to float to 1.2 atm under higher load conditions, giving the plant the capability to better handle larger transients, leading to more stable operations of the cryogenic system.

Some capacity margin is required for the first stage compressors to adequately handle transients from the load. However, the greater the margin, the more the power required. This margin is minimized by: (1) taking advantage of the large liquid inventory in the cold box sub-cooler and rings to properly tune control loops so that mass flow transient peaks are reduced; and, (2) addition of a mass-in line and valve such that make-up from gas inventory can be injected (normally) into the interstage. Note that the latter also provides increased stability to the load by eliminating low pressure stream fluctuations.

TABLE 1. Phase II Gas Management Control Logic.

VARIABLE	CONTROL LOGIC
First-stage suction pressure	Lower limit (1.05 atm) is maintained by first-stage bypass valve; this protects from sub-atmospheric operation.
Inter-stage pressure	Lower limit (2.5 atm) is maintained by second-stage bypass valve; this ensures adequate pressure required for first-stage oil removal. (closed during normal operations)
Second-stage discharge pressure	1. Set point for this pressure control loop is determined by the liquid level in the 14,000 liter liquid helium sub-cooler pot. Discharge pressure set point is a linear function of the liquid level; with the highest set-point at the lowest allowed liquid level, and the lowest set-point at the highest allowed liquid level. This requires four operator inputs. 2. Set point is maintained by: (a) mass-in valve into the inter-stage or (b) in the event that the gas storage pressure is low, the mass-in valve into the first-stage suction (c) mass-out valve on the high pressure side of plant. Note: there is a positive offset between the mass-out and mass-in valves.

Elimination of the Emergency Tank

With the previous gas management philosophy, a plant upset or large load transient could result in the low-side pressure dropping to sub-atmospheric levels. A 170,000 liter emergency gas tank was used to supply makeup into the low side to prevent this drop in low-side pressure. With the current gas management philosophy, the emergency tank was no longer needed because first-stage bypass is controls the low-side pressure.

Cold Box Control Loops

The coldbox cycle consists of two expansion loops: a warm expander train, consisting of a string of two sets of two expanders, separated by a heat exchanger, and the cold expander train consisting of a two expander string separated by a heat exchanger. Both of these loops expand across the plant's full pressure ratio, recycling to the first-stage compressors. TABLE 2 shows the primary cold box control loops. The cold box also has overriding cascade control loops (not listed) that take over when certain threshold values have been reached or exceeded. These take effect during upset conditions to prevent the compressors from tripping, or the plant from getting too cold (causing some turbines to trip). [3].

TABLE 2. Phase II Cold Box Controls

VARIABLE	CONTROL LOOP
Expander 4 Exit Temperature (i.e., Expander 1 - 4 string capacity)	Expander 4 exit temperature is prevented from dropping by adjusting expander 1 inlet vanes with an upper limit on vanes. Upper limit on expander 1 inlet vanes is set such that with the base heat load on the plant, the temperature of expander 4 runs at the desired set point (~43K). Note that the vanes close when the plant is unloaded in case of a transient such as a magnet quench. Expander capacity changes when the plant's discharge pressure changes.
Expander 2 Rotation Speed	Speed maintained by adjusting expander 2 inlet vanes with the set point to match expander 1 speed (this allows the expander work extraction to be split evenly between expanders 1 & 2).
Expander 3 Inlet Pressure	Inlet pressure maintained by adjusting expander 3 inlet vanes with set point at 9 atm. (for maximum efficiency).
Expander 4 Rotation Speed	Speed maintained by adjusting expander 4 inlet vanes with set point set to match expander 3 speed (this allows the expander work extraction to be split evenly between expanders 3 & 4).
Shield Flow	Flow maintained by adjusting shield return control valve to hold flow set point.
Expander 6 Exit Temperature (i.e., Expander 5 - 6 string capacity)	Expander 6 exit temperature is prevented from dropping by adjusting expander 5 inlet vanes with upper limit on vanes. Upper limit on expander 5 inlet vanes is set such that with the base heat load on the plant the temperature of expander 6 runs at the desired set point (10K). Note that the vanes are closed when the plant is unloaded in case of a transient such as a magnet quench. Expander capacity changes when the plant's discharge pressure changes.
Expander 6 Inlet Pressure	Inlet pressure maintained by adjusting expander 6 inlet vanes with set point at 8 atm. (for maximum efficiency).
Supply Pressure to Magnet Loops	Pressure maintained by pressure control valve taking flow from the Joule-Thompson expander loop.
Joule-Thompson Expander Loop Temperature	Temperature maintained by controlling fill valve to plant's sub-cooler tank (i.e., the discharge pressure changes according to the liquid level, so that the plant capacity matches the required load).

Compressor Oil Management

When oil inventory could not be accounted for, the origin of the losses was investigated. Oil was found to have accumulated in the 0.9 m (36-inch) low-pressure return header between the cold box and the first-stage compressor suction. A drain line and a drain pump were installed in this header to permit accumulated oil to be returned to the compressor-system main oil recovery sump.

Warm Gas Storage Tank Scrub

Piping to five gas storage tanks, designated to process helium considered contaminated, were modified so that the gas could flow in one end of the tank and out the opposite end. This allowed the gas in the tanks to be scrubbed thoroughly from end to end and then transferred to other tanks for clean storage.

Cold Compressors & Cold End Piping Re-Configuration

As previously mentioned, the control logic changes allowed the first-stage suction to be lowered to 1.05 atm. Consequently, the low head producing cold compressors (see FIGURE 1) were no longer needed to offset the plant's heat exchanger stack pressure drop to obtain margin for the temperature sensitive DX magnets. The elimination of the cold compressors resulted in a cold-end load reduction of about 800 W. Operating with these changes, the DX magnets have been operating satisfactorily with increased stability.
It was also necessary to reconfigure the original cold box piping (see FIGURES 1 & 2), so that the ring return entered the plant at a colder location than the expander 5-6 train discharge.

PHASE III A & B

FIGURE 3 shows the plant and process control configuration through Phase III A and B.

Collider Magnet Loop Circulators

The two RHIC magnet ring flow loops each had a helium circulator to circulate the supercritical helium flow around the magnet loops. The plant supplied 4.5K 4 atm helium to the supply headers that feed the ring re-coolers (FIGURE 4). The flow routing was reconfigured to direct the flow from the plant to first circulate through the magnet loops then feed the ring re-coolers. This eliminated the need to use the helium circulators (FIGURE 5) which resulted in more reliable operation (with less rotating machinery) and a load reduction on the plant (i.e., no pump work). Additionally, this change resulted in an increase of flow through each magnet loop to 165 g/s from 120 g/s and a corresponding decrease in the magnets' average temperature (by up to 70 mK). To date, this change has his improved the stability of the magnets and reduced quenches, especially at maximum currents, further improving availability.

Sub-Cooler Pot MLI & Heat Exchanger 1 Balancing

The plant's sub-cooler vessels were uninsulated because the MLI insulation was originally applied only on the cold box's vessel wall. To improve plant safety, in the event of a loss of vacuum to the cold box, new MLI insulation was applied to the sub-cooler pot to reduce this failure mode heat load. This also reduced the heat leak.

Due to the large size of the plant, and the ISABELLE cold box design requirement heat exchanger 1 and 2 consist of three separate horizontally oriented plate-fin cores, connected in parallel and stacked one above the other. Because of the unequal flow resistance of each heat exchanger core, flow exiting one of the heat exchanger cores on the low-pressure side was much colder than the other two. Hand operated gear actuators were installed on the manual isolation valves for each of the three high-pressure streams to balance the flow. This resulted in approximately 70 g/s reduction in the warm expander train flow.

Joule-Thompson Expander Loop & New Heat Exchangers

Phase III also involved adding an additional expansion step using a Joules-Thompson expander (T7) loop and additional heat exchangers (HX-20 through 24) at the low

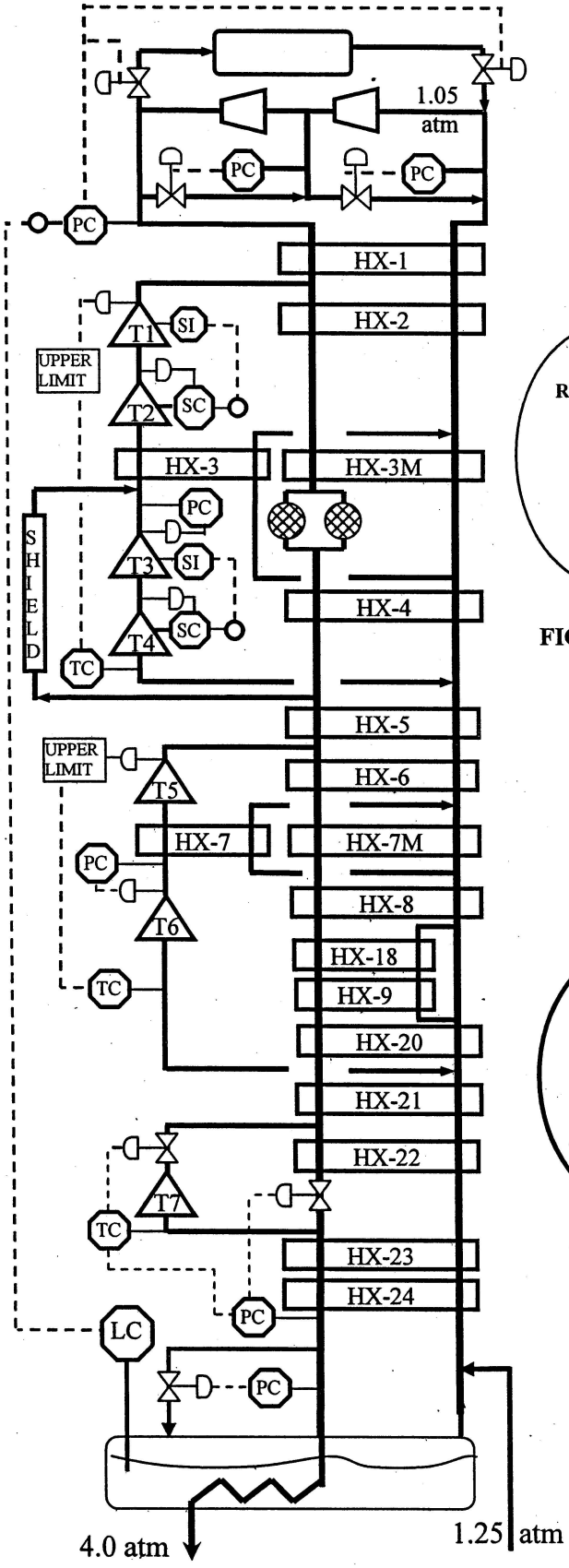

FIGURE 3. Configuration 2007 Operation

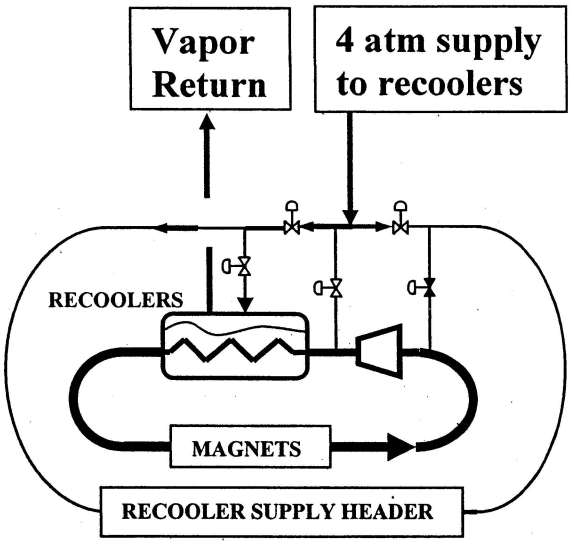

FIGURE 4. Collider magnet flow loop with circulators

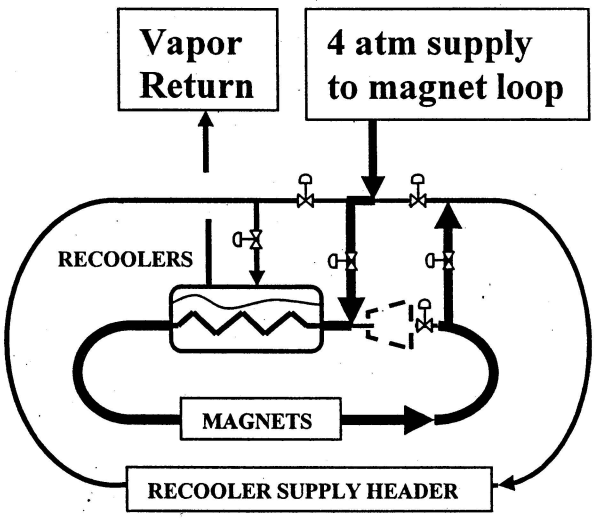

FIGURE 5. Collider magnet flow loop without circulators

temperature end (or load end) of the plant (FIGURE 3). The integration of these modifications further reduced the required compressor flow and input power. The design has been presented in a previous publication [4]. Under the baseline load with the new Joule-Thompson expander operating, the power consumption has dropped to a nominal 5 MW. The number of operating second-stage compressors dropped from 3 to 2, and the number of first-stage compressor skids (that have two compressors each) dropped from 5 to 3.5.

Unlike the other expanders in the plant, the new expander is a fixed inlet area nozzle expander with a variable brake. TABLE 3 summarizes the controls that have been added.

TABLE 3. Additional Control Loops Phase III-B

VARIABLE	CONTROL LOOP
Expander 7 Output	Fixed inlet vanes expander. Work output and mass flow is varied when the plant's discharge pressure changes. A cascading temperature control loop throttles the inlet valve close when the outlet temperature drops below a threshold (during quench recovery etc.).
Expander 7 Bypass Valve	Normally closed when Expander 7 is operational (active if expander 7 is off). Opens to maintain flow supply pressure to magnet loops when the demand exceeds expander 7 capacity. There is a temperature loop cascading on this pressure control loop when the plant gets too cold to keep the valve open (plant loaded).
Supply Pressure to Magnet Loops	Pressure maintained by adjusting the fill valve into the subcooler pot. {Liquid level adjusts the discharge pressure (plant capacity), to match the required load.}

Additional Plant tuning

After installing T7, the plant was tuned as follows. The first order optimization was done based on having approximately equal flow for each Carnot step. A second order optimization is based on modifying the pressure ratio across each turbine string to increase the over all temperature ratio for each string (Carnot step) to reduce the flow through the turbine string. Most of the recoolers' Joule-Thompson valves and other control valves on the plant were slowed to follow the process more gracefully. All this tuning helped to reduce the number of operating compressors to the present level.

PHASE IV

The proposed Phase IV would involve upgrading the cold expander train (expanders 5 and 6) by either (1) resizing the existing oil-bearing Rotoflow expanders, or (2) replacing the existing expanders with new, gas-bearing expanders. The latter option is preferred because it will eliminate the continuous oil-contamination problems associated with the existing expanders. An expected power reduction of at least another 0.5 MW is expected from this upgrade. However, before (re-)sizing the new or upgraded expanders, consideration of future RHIC loads and upgrade cost vs. savings must be assessed.

PLANT EFFICIENCY AND SUMMARY

TABLE 4 presents the RHIC's total Carnot work with full lead flow, and the summary of the plant's efficiency improvement history. FIGURE 6 depicts the power consumption history of the plant starting from the 2002 run (i.e., each run starts in the autumn of the previous year and ends the summer of the run year). It shows the decrease from the 10 to 9.4 MW to the current 5 MW with the baseline load. When the power lead flows are at maximum, the liquefaction load increases from the baseline load of 32 g/s to 41 g/s, and power consumption increases by about 0.15 MW.

TABLE 4. RHIC Cryogenic Plant Carnot Work and Carnot Efficiency History

Load	2007 Run	Carnot Work [kW]
Shield, 40K-80K	25 kW	132
4.5K Liquefaction	36 g/s *	245
4.5K Refrigeration	9.4 kW	693
TOTAL		1070

Phase	Power [MW]	Carnot Work [kW]	Carnot Efficiency [%]
Start	9.4	1012	10.7
Phase 1	7.8	1012	13.0
Phase 2	7.3	1012	13.8
Phase 3A	6.2	983	16.0
Phase 3B	5.1	1070	20.9

*Average liquefaction load during Phase 3B

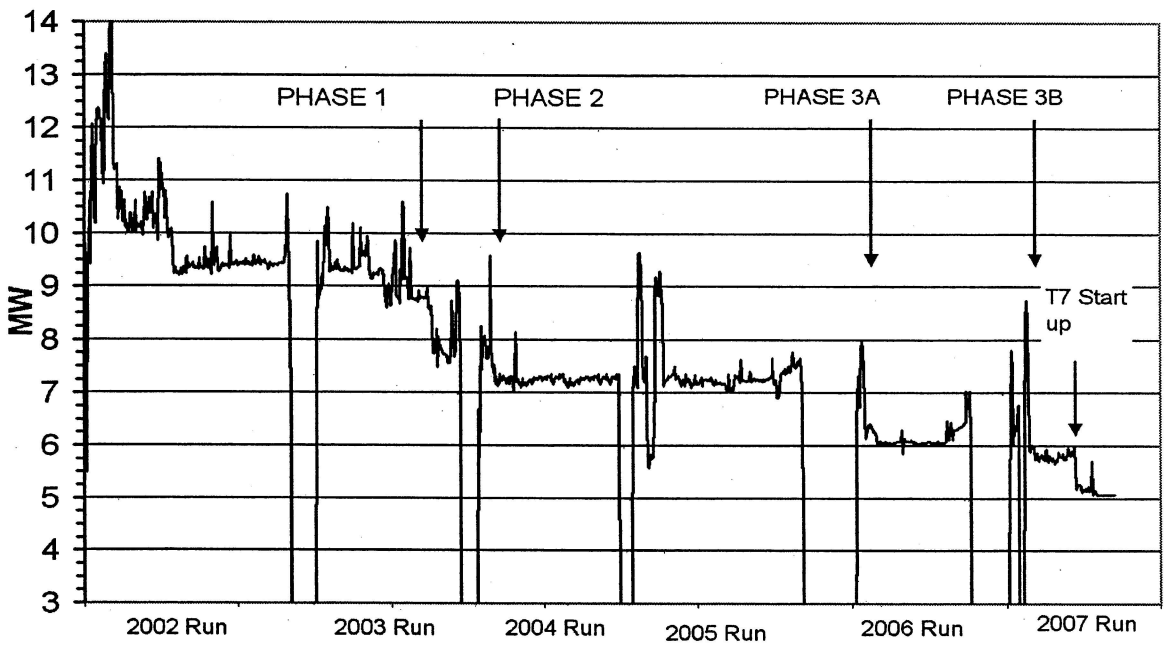

FIGURE 6. RHIC Cryogenic Plant Power History Chart

The upgrades made during the three phases have resulted in a nearly 50% reduction in power consumption, and have also increased the reliability and stability of the cryogenic system and the accelerator operations.

ACKNOWLDEGEMENTS

This work was supported by Brookhaven Science Associates, LLC under Contract No. DE-AC02-98CH10886 with the U.S. Department of Energy and by a sponsored research grant from Renaissance Technologies Corporation. The publisher by accepting the manuscript for publication acknowledges that the United States Government retains a non-exclusive, paid-up, irrevocable, world-wide license to publish or reproduce the published form of this manuscript, or allow others to do so, for United States Government purposes.

We would also like to thank M. Wright and J. Creel at JLab; H. Strong from Oak Ridge Lab; and P. Talty and W. DeJong and his installation crew at BNL.

REFERENCES

1. Brown, D.P. et al., "Cycle Design for the ISABELLE Helium Refrigerator," *Advances in Cryogenic Engineering 27*, edited by R.W. Fast, Plenum Press, New York, 1981, pp. 501-516.

2. Brown, D.P. et al., "Operational Tests of the BNL 24.8 kW, 3.8 K Helium Refrigerator", *Advances in Cryogenic Engineering 31*, edited by R.W. Fast, Plenum Press, New York, 1986, pp. 627-633.
3. Sidi-Yekhlef, A., et. al, "The Relativistic Heavy Ion Collider (RHIC) Refrigerator System at Brookhaven National Laboratory: System Performance and Operations Upgrades for 2003," Cryogenics Operations 2004 Workshop, Newport News, Virginia, March 30 - April 2, 2004, BNL-71966-2004-CP, OSTI 15007214.
4. Sidi-Yekhlef, A., et. al, "The Relativistic Heavy Ion Collider (RHIC) Refrigerator System at Brookhaven National Laboratory: Phase III of the System Performance and Operations Upgrades for 2006," *Advances in Cryogenic Engineering 51B*, edited by J.G. Weisend II, AIP, New York, 2005, pp. 2010-2017.
5. Fischer, W., et al., "Luminosity Increases in Gold-gold Operation in RHIC," 2004 European Particle Accelerator Conference (EPAC-04), Lucerne, Switzerland, 5 Jul 2004.