BNL – 90254 - 2009 - CP

DEVELOPMENT, INSTALLATION AND OPERATION OF THE MPC&A OPERATIONS MONITORING (MOM) SYSTEM AT THE JOINT INSTITUTE FOR NUCLEAR RESEARCH (JINR) DUBNA, RUSSIA

V.V. Kartashov, Y.A. Romanov, V.N. Samoilov, B.A. Shestakov,
Cristen Duncan, Lorilee Brownell, William T. Pratt, Joseph Carbonaro,
Robert M. White, James A. Coffing,

Presented at the 50th Annual INMM Meeting
Institute of Nuclear Materials Management Conference

Tucson, AZ
July 12-16, 2009

July 2009

Nonproliferation and National Security Department

Brookhaven National Laboratory
P.O. Box 5000
Upton, NY 11973-5000
www.bnl.gov

Notice: This manuscript has been authored by employees of Brookhaven Science Associates, LLC under Contract No. DE-AC02-98CH10886 with the U.S. Department of Energy. The publisher by accepting the manuscript for publication acknowledges that the United States Government retains a non-exclusive, paid-up, irrevocable, world-wide license to publish or reproduce the published form of this manuscript, or allow others to do so, for United States Government purposes.

This preprint is intended for publication in a journal or proceedings. Since changes may be made before publication, it may not be cited or reproduced without the author's permission.

DISCLAIMER

This report was prepared as an account of work sponsored by an agency of the United States Government. Neither the United States Government nor any agency thereof, nor any of their employees, nor any of their contractors, subcontractors, or their employees, makes any warranty, express or implied, or assumes any legal liability or responsibility for the accuracy, completeness, or any third party's use or the results of such use of any information, apparatus, product, or process disclosed, or represents that its use would not infringe privately owned rights. Reference herein to any specific commercial product, process, or service by trade name, trademark, manufacturer, or otherwise, does not necessarily constitute or imply its endorsement, recommendation, or favoring by the United States Government or any agency thereof or its contractors or subcontractors. The views and opinions of authors expressed herein do not necessarily state or reflect those of the United States Government or any agency thereof.

Printed on recycled paper

DEVELOPMENT, INSTALLATION AND OPERATION OF THE MPC&A OPERATIONS MONITORING (MOM) SYSTEM AT THE JOINT INSTITUTE FOR NUCLEAR RESEARCH (JINR) DUBNA, RUSSIA

V.V. Kartashov, Y.A. Romanov, V.N. Samoilov and B.A. Shestakov
Joint Institute for Nuclear Research (Dubna, Russia)
Cristen Duncan and Lorilee Brownell, NNSA/DOE
William T. Pratt and Joseph Carbonaro, Brookhaven National Laboratory
Robert M. White and James A. Coffing, Aquila Technologies Group, Inc

ABSTRACT

The Material Protection, Control and Accounting (MPC&A) Operations Monitoring (MOM) systems handling at the International Intergovernmental Organization - Joint Institute for Nuclear Research (JINR) is described in this paper. Category I nuclear material (plutonium and uranium) is used in JINR research reactors, facilities and for scientific and research activities. A monitoring system (MOM) was installed at JINR in April 2003. The system design was based on a vulnerability analysis, which took into account the specifics of the Institute. The design and installation of the MOM system was a collaborative effort between JINR, Brookhaven National Laboratory (BNL) and the U.S. Department of Energy (DOE). Financial support was provided by DOE through BNL. The installed MOM system provides facility management with additional assurance that operations involving nuclear material (NM) are correctly followed by the facility personnel. The MOM system also provides additional confidence that the MPC&A systems continue to perform effectively.

INTRODUCTION

JINR is a scientific institute carrying out fundamental research in the area of elementary-particle physics, atomic nucleus and condensed state matter. JINR is located in the town of Dubna, in the Moscow region of the Russian Federation (RF). The member-countries are part of the former republics of the Soviet Union; other members are countries of Europe, Asia, and America with different social and political structures. All research at JINR is done purely for peaceful purposes. The institute is a nuclear hazardous site where a powerful fast neutron research reactor is operated (the fuel is plutonium) as well as other nuclear-physics assemblies. A wide range of nuclear materials (including Highly Enriched Uranium (HEU)) is used during research work. In the Institute there are about 5,000 staff members including experts from various other countries. The Institute is involved with broad international scientific and technical cooperation jointly with specialists invited from other countries. The questions of security, physical protection and safety of nuclear materials specifically with consideration of the international nature of the institute are major activities at JINR.

In the early nineties, due to the moral and physical deterioration of existing security equipment, lack of MPC&A technical means, and an increased potential for terrorist attacks there appeared to be an urgent need for upgrading the MPC&A systems. Such work was started at the Institute at the end of 1995 in close contact and with financial assistance from the U.S. DOE. At present the upgraded MPC&A system at JINR [1] is a functionally completed system. It meets modern requirements and provides a high level of NM safety and protection. The system ensures continuous monitoring of receipt, storage, use, and expenditure of nuclear materials at all stages of research work. The system monitors the transfer of NM to other organizations, necessary

information about the actual NM availability and transfer at any moment of time, timely detection and prevention of loss, unauthorized use, and attempts at stealth.

During the realization of the MPC&A program a need was recognized to develop strategies that would ensure the long-term effective operation of the upgraded MPC&A systems. One of the ways of realization of this task is the development of a long-term monitoring system to be installed at the Institute with the purpose of determining the effectiveness of the MPC&A systems with regards to detection, time delay in adversary's actions and detection of attempts of NM stealth. Within the framework of the MPC&A Program the recommendation to develop and install a monitoring system was adopted in order to help sustain the upgraded MPC&A systems in the long term.

The MOM Project is one of the operational elements used to monitor and verify the effectiveness of the MPC&A systems operation. The work for the MOM Project is done at JINR in the course of development of the MPC&A Program that deals with nuclear materials monitoring and considers the threats from both outside intruders and potential internal adversaries. The main purpose of the MOM Project is the installation of monitoring systems at JINR where the majority of MPC&A systems upgrades have been completed. The purpose of the MOM system is to increase confidence that the MPC&A systems continue to operate effectively. The MOM system at JINR is intended specifically for monitoring implementation of MPC&A systems, regulations and procedures. The MOM system is not in conflict with the MPC&A systems. The MOM system is independent and autonomous.

NEED FOR MOM SYSTEM IMPLEMENTATION:

The following provides a basis for the implementation of the MOM System at JINR:

- provide JINR administration with an automated means of daily NM operational activities, or awareness in "emergency" situations of personnel presence at their working places and their actions for any specified period of time;
- increase objectivity and validity of NM handling control, and operation of upgraded MPC&A systems;
- evaluation of results of MPC&A upgrade programs;
- decrease of labor costs for MPC&A operational status verification;
- increase of personnel responsibility at NM handling and fulfillment of regulations and implementation of MC&A procedures;
- establishment of a unified MPC&A operations monitoring system;
- confirmation of absence of NM stealth or diversion for the purpose of unauthorized use.
- address potential increased requirements of MPC&A guidelines in Russia for the protection of NM;

MOM SYSTEM IMPLEMENTATION:

During the implementation of the system the following main stages and requirements were realized:

1. Review of vulnerability assessments for the site and the installed MPC&A systems.
2. Development of the MOM system conceptual design and its infrastructure, considering the experience of similar system implementations.

3. Purchasing and establishing a set of equipment.
4. Infrastructure installation and the installation of the MOM system itself.
5. Defining the structure of information (list of video cameras) accessible for each Review Station.
6. Selection of methods and means (organizational, technical and software) for providing information security when it is stored and circulated over the local area network (LAN), and when it is accessed from remote review stations.
7. Development of documentation determining the organization and operation of the MOM system as well as personnel guidelines and training.
8. Technical maintenance of the MOM system operation.
9. Resolution of the MOM system hardware-software certification issues.
10. Analysis of the work results and criteria of evaluation of the MOM system performance testing.

A key element of the system is to provide a necessary level of information security based on the use of certified prevention and protection means for sensitive information. The MOM system is networked in an independent LAN configuration and managed centrally from a single data collection server (DCS). The levels of protection ("sensitivity" degree), separation of duty (personnel type), and access modes (operational and "archive") to the stored MOM data and to the data circulating within the system are defined by virtual LANs (vLAN) through the use of intelligent Ethernet switches. A conceptual layout of the MOM system at JINR [2, 3] is presented below in Figure 1.

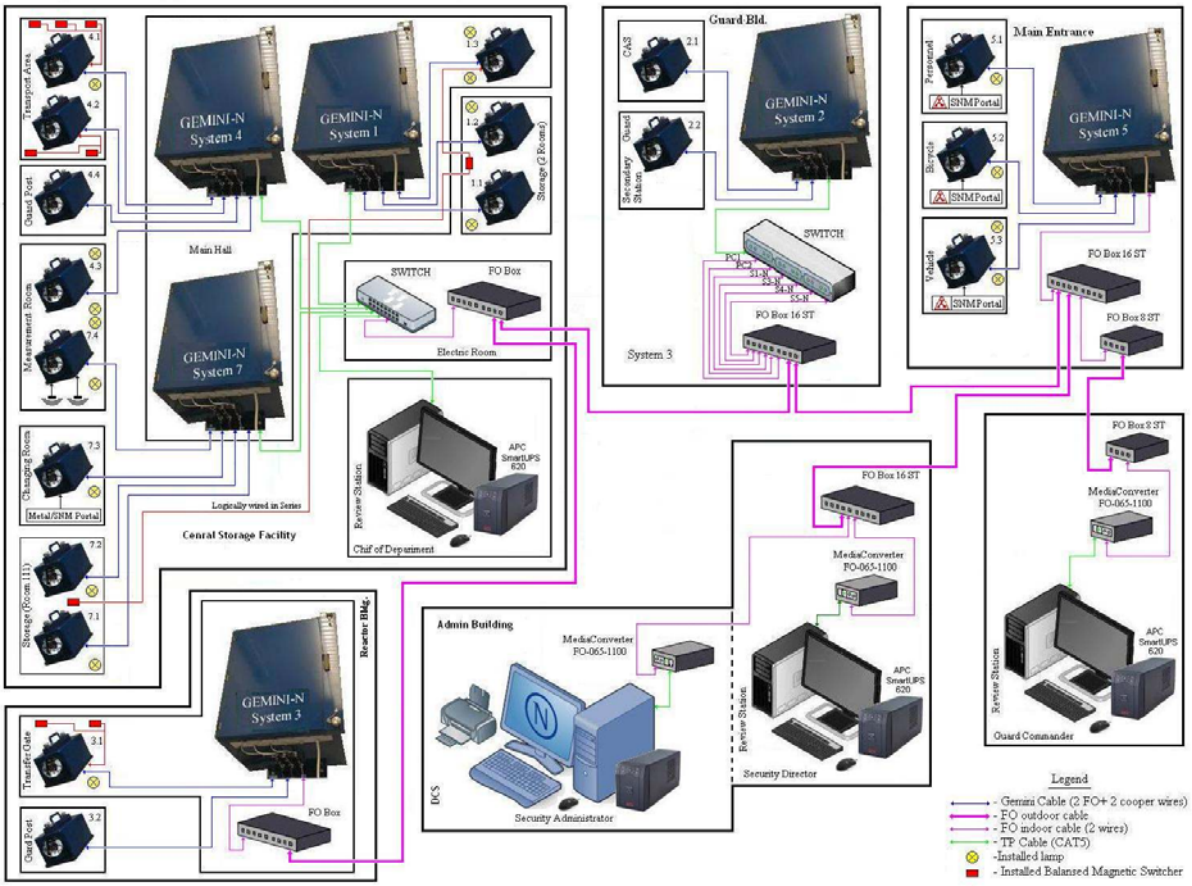

Figure 1 - MOM System Structure - JINR

The monitoring of the NM handling processes is realized with the help of providing surveillance of the critical locations at the NM Central Storage Facility (CSF), IBR-2 Reactor, Entrance Checkpoint (ECP), and the Central Alarm Station (CAS). The status and actions of MC&A and Pro-Force organizations are monitored during the realization of the existing procedures and at the time of threats. The locations of review stations are determined in accordance with the accommodation of the security department leads, heads of the MC&A departments, CSF and guard force management.

At the NM CSF; the choice of the critical monitoring locations is determined on the basis of NM storage conditions and the need to monitor personnel actions and equipment providing nuclear materials safety and also by the architecture of the CSF. The following locations are considered to be critical: entrance into the main hall at the metal detector and NM portal monitor, the hall itself and entrances into the rooms with NM safes, and the rooms with the safes. The cameras are installed in such a way that all the cabinets, racks with nuclear materials, the vehicle-trap entrance, NM critical measurement point, and the CSF guard post are monitored.

In the IBR-2 Reactor Building; the choice of critical monitoring locations is influenced by the fact that, under normal operational conditions, the nuclear materials are in the reactor and are self-protected. The most critical locations for both external and internal threats are therefore the two entrances into the technological corridor leading into the IBR-2 Reactor halls. Due to this the first entrance is controlled (guard post at the entrance to the reactor) as well as the second one (transportation gates and the hallway from the adjacent corridors).

At the ECP; MOM cameras installed at the vehicle entry control point and pedestrian ECP monitor the guard posts, pro-force actions and the general situation at the check point. During a threat, personnel and guard-force actions are monitored from the additional sensors and signals from the existing PPS equipment.

In CAS; the TV surveillance of the CAS operator's rooms (control room duty operator) and CAS guard-force commander allow for monitoring the status of key people working in the area of physical protection and NM security.

MOM SYSTEM EQUIPMENT

The MOM System equipment consists of the following basic elements: GEMINI-N Camera Module, GEMINI-N Base Station, Data Collection Server/Review Station and infrastructure (Ethernet switch, permanent lighting, cables, and sensors).

Camera Module; there are 3 independent working modes of video image recording:

1. Based on a pre-set time interval - "Time Lapse" (The time-lapse video image recording mode provides for the image to be captured at pre-set time intervals, for instance, every seven minutes).
2. Based on an external trigger signal -"Alarm" (from a BMS, radiation portal monitor etc.) The mode of recording initiated by the external trigger signal captures the images in case there are signals from the triggers generated either by the camera itself or by the other system components.
3. Based on motion detection -"Motion" (the images are "tagged" when the subsequent ones are changed). The motion detection recording mode provides for the capture of images when

motion takes place, for example, each time the camera detects motion, such an image is considered a motion image.

Constant video surveillance of targets are processed every second and digitally stored in an internal image buffer. When any of the three working modes are detected (Time Lapse, Alarm, and/or Motion), the MOM camera 'tags' images for processing and sends images to the MOM base station and DCS.

Alarm and Motion working modes are tagged with pre, during, and post images. The internal image buffer allows for tagging up to 50 images (previous 100 seconds) to provide a record of pre-image data before the detected event. The camera also tags images while the event is occurring and continues take tag post-images afterwards for up to 5 minutes. The collection of these images provides a thread of consecutive information to assess the entire potential threat/activity and determine if MOM objectives are met. Each camera is independently configured and optimized to verify the specific MOM objective that is being monitored.

All stored images contain information about the time and date of the event, camera serial number, and reason for image. Furthermore, alarm and motion events are stored in separate directories to allow the user to quickly identify and assess potentially vulnerable MPC&A situations.

The image processing also includes an authentication procedure that is introduced to exclude unauthorized interference into the video data transfer channel and is carried out by means of adding a special electronic digital signature to all tagged images. This procedure is realized before the tagged image it stored on a PC-card or transferred to the Base Station. Figure 2 provides an exploded view of a camera module. It is comprised of a unshielded twisted pair (UTP) to fiber-optic cable converter, camera control module (includes PC-Card), and a highly sensitive analogue camera.

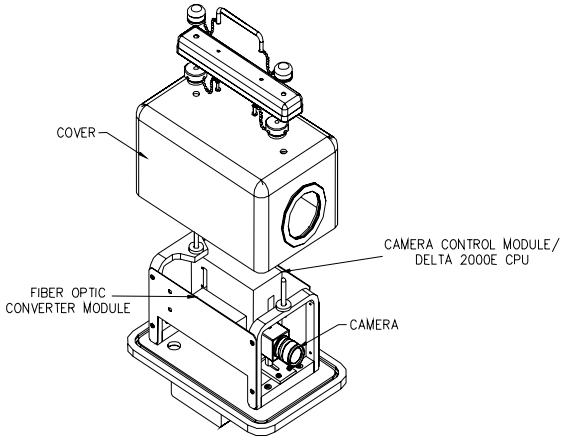

Figure 2 - MOM System Camera Module

Images are sent from the cameras using the pre-configured software application "Aquila Camera Software for GeminiN 1.7.4" to a Base Station where they are stored on 440MB PC-Cards. After the Base Station hardware/software sorts out the images depending on the type (time interval - "Time Lapse", motion -"Motion", external trigger -"Alarm"), a "state-of-health" log file is continually updated to provide a record of image activity.

The GEMINI-N Base Station (Figure 3); includes an industrial computer, LCD monitor, keyboard/trackball mouse, battery backup power system, power supply, two chargers, two batteries, programmed watchdog timer, Ethernet switch with fibre-optic cenverters, eight adapters, connectors of Fibre-optics to UTP cables.

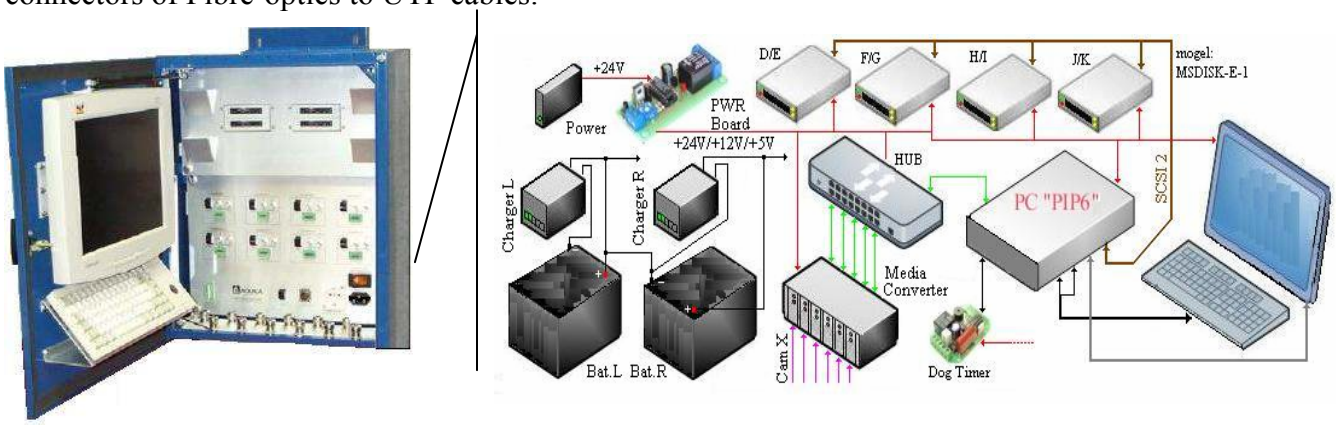

Figure 3 - Gemini-N Base Unit (Schematic view included)

The DCS/ Review Station consists of; A PC using a Pentium III Processor of 1.2GHz, video adaptor, RAM, SCSI Card, hard drives (system and storage), audiocard, Ethernet netwrok adaptor, CD ROM disc drives (R, RW), PC Card flash-disc drives, monitor, UPS, keyboard, mouse, power supply block, media converter.

MOM SYSTEM SOFTWARE

The MOM System software consists of the following basic elements:

Camera Software: OS LINUX v.6.0, Aquila (rom18.bin) software application.

Base Station Software: Gemini-N 1.7.4 (camera software) and DRMClient (image processing and activity software).

The camera software is used to configure GEMINI-N system to obtain images from each camera. The DRMClient software module consists of seven software applications that are meant for the background processing and image management, installation and control at the local and remote computers of sorting out the images received from the cameras, review of images on the screen and provide a user with visual data about the operation and status of the system as a whole.

The DCS/Review Station software is similar to the Base Station software but the DCS is configured to store/archive images for user review. Additionally, General Advance Review Software (GARS) is loaded on to these machines.

The GARS software is designed for the organization to efficiently review the stored images and a sample GARS screen is shown in Figure 4.

Figure 4 - Sample GARS Review Screen

GARS software is equipped with an intuitively clear, flexible, and easy user interface. The program uses a high-performance algorythm of motion detection at a monitored facility that allows to effectively discover any changes in the sequence of images in accordance with the parameters determined by the user and pre-set zones of critical interest.

MOM SYSTEM PILOT OPERATION AT JINR

All the information from Base Stations is collected and stored at the main system server (DCS). The received and stored images are tagged with time, date, camera number and reason for the image taking. It allows for the system operator to control the uninterrupted processing of the tagged images. The recording of the events is carried out at a pre-set time from 5 minutes to 24 hours independently from motion and/or alarm detections. From the DCS, it is possible to change the technical parameters of each camera which provides for the event recording in such a mode that is most acceptable for a specific object of monitoring.

The DCS and a review station are installed in separate protected rooms at the Security Department and allows the Security Department to carry out the operational or regular review of all the monitored targets. Review stations are also installed at the offices of the CSF (MC&A Department Head) and Pro-force Commander which allows them to monitor the activities of their personnel only, determine the level of their training and take measures in case of detected violations. Review stations are configured to not allow users to change MOM camera configurations. Basic NM handling procedures monitored by the MOM system:

- access to the NM storage vault;
- performance of the “two-man” rule;
- administrative checks of the NM current status;
- TID’s turning on/off;
- NM inventory takings;
- NM transfer within the site and outside its boundaries;
- changes in NM characteristics in the critical measurement points (CMP);
- course of MPC&A procedures testing;
- personnel access within certain target areas of the facility

MAIN RESULTS OF MOM SYSTEM IMPLEMENTATION

The operation of the MOM system provides for the visual monitoring of selected critical locations of the facility and increases confidence that the procedures referring to the safety of nuclear materials and site security are fulfilled in a proper manner without violations.

The data received with the MOM system allows the facility:

- to carry out vulnerability analyses of separate site elements to discover weak points related to NM use and storage;
- to evaluate and develop methods for improving personnel training during for working with nuclear materials;
- to assess the functioning of the management and administration during NM handling;
- to monitor technological operations and procedures that occur during NM handling;
- to monitor the guard-force commander's and CAS operator's actions in case of NM emergency situations;
- to evaluate the pro-force actions both when the detectors and NM carrying (transfer) detection equipment, that are installed at the ECP, go off and when the guards perform their routine duties;
- to assess the efficiency of the existing MPC&A systems, permissive access system and access to nuclear materials and determine ways for improvement.

The use of the MOM system provides an opportunity to determine the status of proper and efficient work with nuclear materials that is close to the standard, their accounting, control and storage as well as to improve the level of nuclear materials security. Figure 5 shows the location of the system elements at surveillance sites for Cameras 7.2 and 7.3, while Figure 6 presents sample images from video cameras 7.2 and 7.3.

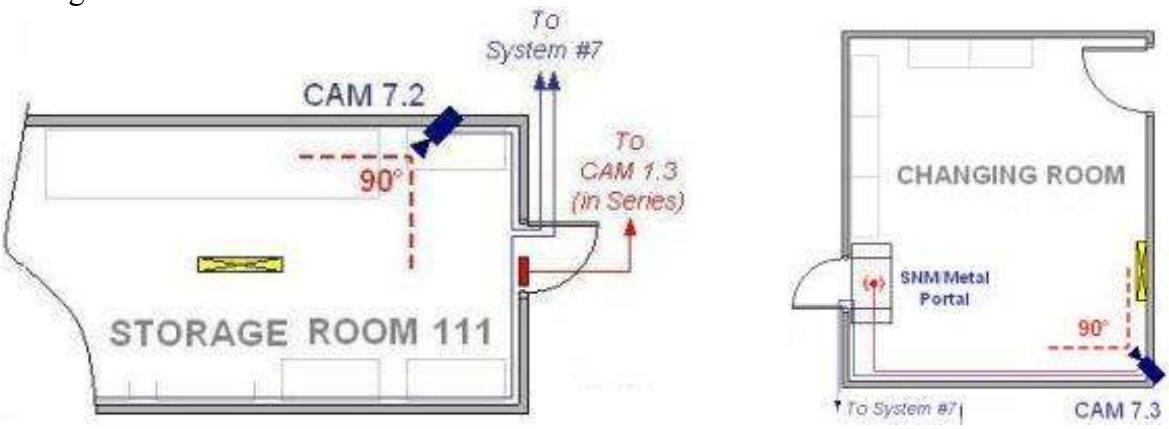

Figure 5 - Schematic View of Two Camera Locations (7.2 and 7.3)

Figure 6 - Sample Images from Cameras 7.2 and 7.3

In respect to the evaluation of personnel training and means of MPC&A systems management the MOM system allows the facility:

- to carry out a detailed analysis of the personnel work quality including the pro-force staff to determine the status of correct and effective work with NM,
- to use this analysis as a basis for the improvement of methods of NM work and protection,
- to evaluate the level of personnel training and develop ways of improvement,
- to assess the functioning of the MPC&A management mechanisms and leadership styles for work with NM

During MOM system design, installation and maintenance JINR benefited from the positive experience of other facilities where similar MOM systems have been installed. This interaction made it possible to ensure a general ideology, unified list of equipment and spare parts. With respect to the drawbacks of the MOM system pilot operation at JINR it is possible to refer the absence of a distinct definition of the system from the RF regulating bodies and insufficient understanding of the MOM system tasks and capabilities on the part of the personnel.

Experience gained from interaction of JINR and U.S. specialists: after the installation at JINR the MOM system final configuration was made. After the system was made operational JINR draws up a quarterly report for the MOM system that includes “state-of-health” files, anomalies assessment, and proposals for improving the MPC&A system. The US MOM working group visits JINR to confirm the data received by the MOM system and its correct work. A random check of the images by the time/date is done for evaluation during the site visits. The data obtained during the course of visits and from the quarterly reports is analyzed by the US project teams participating in the MPC&A program in order to confirm the equipment working status. The joint review of the data received with the help of the MOM system contributes to increased confidence that the MPC&A systems on the whole continue to function effectively.

The number of equipment failures is insignificant and consisted (during 5 years of operation) of replacement of 4 camera modules, 3 industrial computers, 2 server power supply blocks, 2 batterires in the UPS’s of Review Stations. JINR uses its own effort to ensure the system post-warranty maintenance and repair work continues.

PLANS FOR FURTHER MOM SYSTEM USE AT JINR

Based on the results of work for software certification, special inspection of the hardware and system attestation (with the U.S. side financial support) the Institute is planning on obtaining a correspondent allowance from the RF State Technical Committee for the continuous operation of the MOM system. The Information Security Centre (ISC) of Russia is the organization that will perform these activities for the equipment installed at JINR.

The current critical issues are ensuring the long-term sustainability of the MOM system and the development of the Transition Plan for JINR self-funding.

CONCLUSIONS

The MOM system provides additional assurance that NM handling procedures including physical protection, control and accounting are realized continuously and without violations. The system facilitates the receipt of an assessment of personnel performance during working with nuclear materials. The experience gained from use of the MOM system demonstrates that it is capable of providing additional assurance related to the long-term sustainability of the MPC&A systems.

REFERENCES

1. V.V. Kartashov, V.N. Samoilov, B.A. Shestakov, S. Roecker, L. Wangen and R. Schultheiss. "Sustained Operation of Nuclear Material Physical Protection, Accounting and Control System at Joint Institute for Nuclear Research", INNM 47th Annual Meeting, Nashville, Tennessee, USA, July 16-20, 2006.
2. Conceptual Design of MPC&A Operational Monitoring (MOM) System at JINR, Dubna, Russia. Aquila Technologies Group, Inc., version 3.0, October 17, 2002.
3. Conceptual Addendum Design of MPC&A Operational Monitoring (MOM) System at JINR, Dubna, Russia. Aquila Technologies Group, Inc., version 1.1, April 29, 2006.