BNL-95226-2011-CP

RHIC electron lens test bench diagnostics

D.M. Gassner, E. Beebe, E. Fischer, X. Gu, K. Hamdi,
J. Hock, C. Liu, T. Miller, A. Pikin, P. Thieberger

Presented at the 10th European Workshop on Beam Diagnostics and Instrumentation for Particle Accelerators (DIPAC 2011)
Hamburg, Germany
May 16-18, 2011

Collider-Accelerator Department

Brookhaven National Laboratory

U.S. Department of Energy
DOE Office of Science

Notice: This manuscript has been authored by employees of Brookhaven Science Associates, LLC under Contract No. DE-AC02-98CH10886 with the U.S. Department of Energy. The publisher by accepting the manuscript for publication acknowledges that the United States Government retains a non-exclusive, paid-up, irrevocable, world-wide license to publish or reproduce the published form of this manuscript, or allow others to do so, for United States Government purposes.

This preprint is intended for publication in a journal or proceedings. Since changes may be made before publication, it may not be cited or reproduced without the author's permission.

DISCLAIMER

This report was prepared as an account of work sponsored by an agency of the United States Government. Neither the United States Government nor any agency thereof, nor any of their employees, nor any of their contractors, subcontractors, or their employees, makes any warranty, express or implied, or assumes any legal liability or responsibility for the accuracy, completeness, or any third party's use or the results of such use of any information, apparatus, product, or process disclosed, or represents that its use would not infringe privately owned rights. Reference herein to any specific commercial product, process, or service by trade name, trademark, manufacturer, or otherwise, does not necessarily constitute or imply its endorsement, recommendation, or favoring by the United States Government or any agency thereof or its contractors or subcontractors. The views and opinions of authors expressed herein do not necessarily state or reflect those of the United States Government or any agency thereof.

RHIC ELECTRON LENS TEST BENCH DIAGNOSTICS*

D. M. Gassner#, E. Beebe, W. Fischer, X. Gu, K. Hamdi, J. Hock, C. Liu, T. Miller, A. Pikin, P. Thieberger BNL, Upton NY 11973 U.S.A.

Abstract

An Electron Lens [1] (E-Lens) system will be installed in RHIC to increase luminosity by counteracting the head-on beam-beam interaction. The proton beam collisions at the RHIC experimental locations will introduce a tune spread due to a difference of tune shifts between small and large amplitude particles. A low energy electron beam will be used to improve luminosity and lifetime of the colliding beams by reducing the betatron tune shift and spread. In preparation for the Electron Lens installation next year, a test bench facility will be used to gain experience with many sub-systems. This paper will discuss the diagnostics related to measuring the electron beam parameters.

INTRODUCTION

The E-Lens test bench facility presently being designed & fabricated will be located at the existing Electron Beam Ion Source (EBIS) test facility [2] at BNL for convenience and to minimize cost. First electron test beams (no protons at test bench) are scheduled before the end of 2011. The Electron lens will be installed in RHIC the following year. Since the E-Lens 2.8m superconducting (SC) solenoid is now under construction, the 1m long 5T EBIS SC solenoid with a 155mm warm bore inner diameter, and internal drift tube structures with 32mm inner diameters, will be re-used to help guide the 600mA 6keV electron beam through the 3m test bench transport from gun to collector, see Fig. 1. This test bench will allow testing of all major diagnostics except the BPM and luminosity detector. The beam line elements upstream and downstream of the SC solenoid will be baked to 250C in order to achieve 10^{-10} Torr vacuum pressure. The primary goals of the E-Lens test bench are to characterize the new electron gun, and test the beam modulator, diagnostics, and the new electron collector.

CURRENT MONITORING

Several different types of current transformers mounted on the gun and collector power supply leads will measure the electron beam average current level, as well as the temporal waveform characteristics. Pulsed beams will be used for commissioning and destructive diagnostics modes. Direct current beam will be typical for E-Lens operations in RHIC.

Pearson Electronics wideband current transformers model 6585 will be used when operating in pulsed beam mode. Design pulses are to be at least 300ns wide, with 50ns rise and fall times. A Bergoz IPCT-2000m will be used for direct current mode. Electronics will be provided for gun to collector difference measurements to determine beam loss.

A BNL designed electron gun modulator will control the electron beam pulse characteristics. The modulator will have the capability of providing DC electron beams as well as a variety of pulsed modes.

The internal isolated drift tube structures along the beam transport will be biased at up to 10kV with Trek 10/10B (10mA) and up to 4kV with Trek 609E-6 (20mA) power supplies.

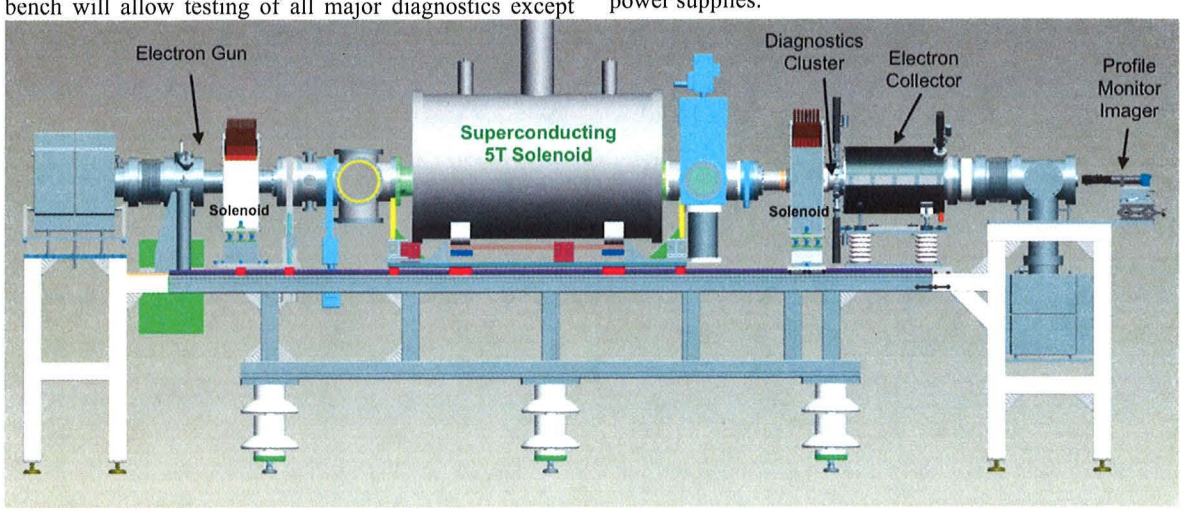

Figure 1: Electron Lens test bench layout. The region between the two warm solenoids of the existing EBIS test stand will remain intact.

* Work supported by B.S.A, LLC under contract No. DE-AC02-98CH10886 with the U.S. Department of Energy.
#gassner@bnl.gov

To protect the drift tubes and power supplies from lost beam current on the tubes we have asked Trek to provide a custom protection circuit that includes a string of transorbs and shunt resistor. Along with an in-house developed threshold detector, these circuits will help indicate areas of beam loss, and inhibit the beam in case of a loss greater than 1mA.

PROFILE MONITORS

YAG Screen

Electron beam profile measurements will be made with a 30mm diameter, 0.1mm YAG:Ce screen from Crytur, Ltd. [3]. The expected beam diameter is ~10mm. We have coated several test screens with 100nm graphite, and 100nm of aluminum. We will compare these for image performance, lifetime, and for backscattering electrons. Since we can coat screens easily here at BNL, other coatings can also be tested. The electron beam power deposited on the screen will be limited to avoid damage. Screen Images will be acquired using a RHEIN IMB-147FT CCD camera (1394a), and zoom lens from Navitar, these will be mounted 1.2m downstream of the YAG screen, behind the electron collector.

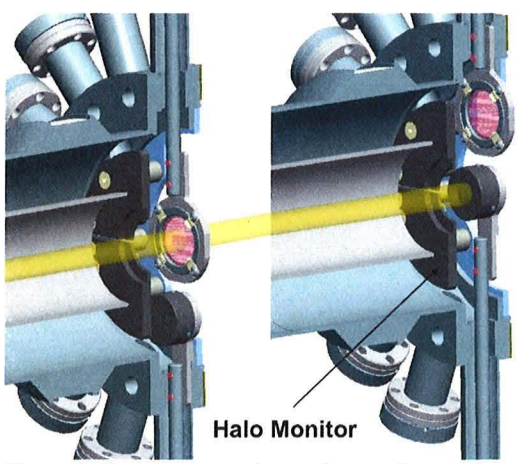

Figure 2: Two cutaway views of same diagnostics cluster located upstream of collector showing the segmented Halo Monitor (dark gray), YAG Screen (pink, left, inserted position), Pinhole detector (right, inserted).

Pinhole Detector

A pinhole detector is used as type of a masked Faraday Cup, shown in Fig. 2 and 3. It is located upstream of the electron collector in the diagnostics cluster, and will be actuated by a pneumatic plunger. It will be used to measure the electron beam density. Steering dipoles upstream will scan the beam across the 0.2mm pinhole. The electrons that pass through are collected and processed by gated integrating electronics.

The pinhole detector data will be correlated with the calculated steering excursions to provide an electron density profile distribution.

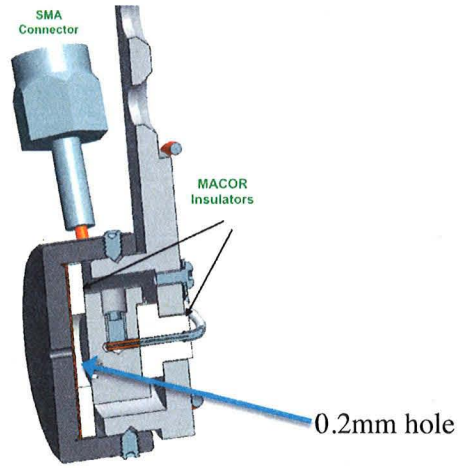

Figure 3: Pinhole Detector detail, electron beams will impact from the left side.

Halo Monitor

A fixed position, isolated, four-quadrant halo monitor is the most upstream instrument at the diagnostics cluster in front of the electron collector, shown in Fig. 2 and 4. Its purpose is to protect the upstream end of the electron collector and monitor the amount of halo that it stops. The electron beam can be steered to graze each monitor to determine the halo distribution.

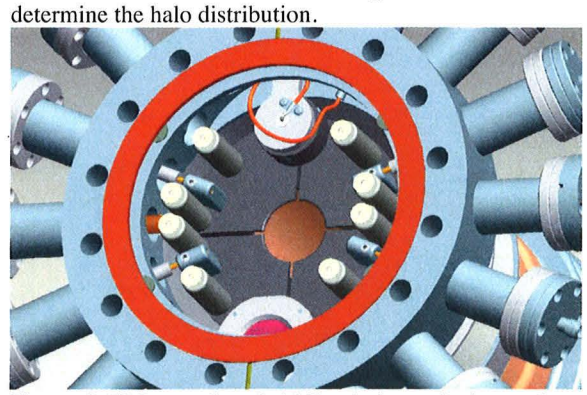

Figure 4: Halo monitor (middle, dark grey) shown from the downstream side.

The clear beam aperture is 23mm. It is made of molybdenum, and is electrically isolated by alumina supports. Signal wires will be routed to current monitoring electronics, or gated integrators. These electronics will be interfaced to the machine protection system to inhibit the beam if the beam is miss-steered.

ION COLLECTOR

Ions will be generated along the electron beam transport due to interaction with residual gas. To avoid ion accumulation in the electron lens, a continuous series of biased drift tubes will be used to create an axial voltage gradient to sweep out any trapped ions and guide them towards the ion collector located behind the electron collector, as shown below in Fig. 5.

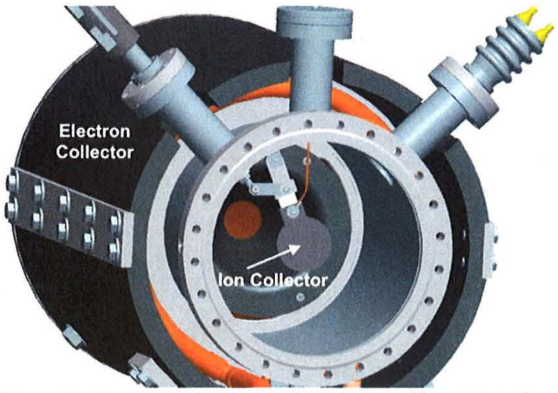

Figure 5: Ion collector in the inserted position, view from downstream of the electron collector.

A pneumatic plunger actuates the ion collector. During normal operations the ion collector is inserted and blocks the optical path between the YAG screen and CCD camera. When inserted it protects the downstream viewing port from damage. The molybdenum ion collector is electrically isolated and will have a signal wire for measuring the collected ions.

ELECTRON COLLECTOR TEMPERATURE

Resistance Temperature Detectors (RTD) will be distributed around the outside of the water-cooled electron collector to ensure uniformity of the deposited heat caused by the collected electrons. These RTD's can also detect a local hot spot if a cooling water pipe becomes blocked.

ACKNOWLEDGEMENTS

We would like to thank the BNL Accelerator Components & Instrumentation Group, especially D. VonLintig, J. Siano, T. Curcio, D. Lehn, and also Dannie Stetski, V. Zajic, C. Montag.

We appreciate valuable communications with FNAL TEL staff, in particular V. Shiltsev, A. Valishev, and G. Stancari.

REFERENCES

[1] W. Fischer, Y. Luo, et al, "Status of the RHIC Head-On Beam-Beam Compensation Project", IPAC10, Kyoto, Japan, MOPEC026, p. 513.

[2] E. Beebe, J. Alessi, S. Bellavia, et al, "Results of Beam Tests on a High Current EBIS Test Stand", PAC '99, New York, WEA9, p. 1902; JACoW, http://www.JACoW.org.

[3] Crytur Ltd., www.crytur.cz