BNL-95298-2011

DECOMMISSIONING OF THE HIGH FLUX BEAM REACTOR AT BROOKHAVEN LAB

J.-P. HU[1], R. N. RECINIELLO[2], N. E. HOLDEN[3]

[1] NY-State Professional Engineer, National Synchrotron Light Source, Brookhaven Lab, NY 11973
[2] Health Physicist, Radiological Control Division, Brookhaven Laboratory, Upton, NY 11973
[3] Guest Physicist, National Nuclear Data Center, Brookhaven Laboratory, Upton, NY 11973

Presented at the Fourteenth International Symposium on Reactor Dosimetry
Bretton Woods, New Hampshire

May 22-27, 2011

National Nuclear Data Center
Brookhaven National Laboratory
P.O. Box 5000
Upton, NY 11973-5000
www.nndc.bnl.gov

U.S. Department of Energy
Office of Science, Office of Nuclear Physics

Notice: This manuscript has been authored by employees of Brookhaven Science Associates, LLC under Contract No. DE-AC02-98CH10886 with the U.S. Department of Energy. The publisher by accepting the manuscript for publication acknowledges that the United States Government retains a non-exclusive, paid-up, irrevocable, world-wide license to publish or reproduce the published form of this manuscript, or allow others to do so, for United States Government purposes.
This preprint is intended for publication in a journal or proceedings. Since changes may be made before publication, it may not be cited or reproduced without the author's permission.

DISCLAIMER

This report was prepared as an account of work sponsored by an agency of the United States Government. Neither the United States Government nor any agency thereof, nor any of their employees, nor any of their contractors, subcontractors, or their employees, makes any warranty, express or implied, or assumes any legal liability or responsibility for the accuracy, completeness, or any third party's use or the results of such use of any information, apparatus, product, or process disclosed, or represents that its use would not infringe privately owned rights. Reference herein to any specific commercial product, process, or service by trade name, trademark, manufacturer, or otherwise, does not necessarily constitute or imply its endorsement, recommendation, or favoring by the United States Government or any agency thereof or its contractors or subcontractors. The views and opinions of authors expressed herein do not necessarily state or reflect those of the United States Government or any agency thereof.

J.-P. HU[1], R. N. RECINIELLO[2], N. E. HOLDEN[3], *Brookhaven National Laboratory, Upton, NY 11973*

DECOMMISSIONING OF THE HIGH FLUX BEAM REACTOR AT BROOKHAVEN LAB

ABSTRACT

The High Flux Beam Reactor at the Brookhaven National Laboratory was a heavy water cooled and moderated reactor that achieved criticality on October 31, 1965. It operated at a power level of 40 mega-watts. An equipment upgrade in 1982 allowed operations at 60 mega-watts. After a 1989 reactor shutdown to reanalyze safety impact of a hypothetical loss of coolant accident, the reactor was restarted in 1991 at 30 mega-watts. The HFBR was shutdown in December 1996 for routine maintenance and refueling. At that time, a leak of tritiated water was identified by routine sampling of ground water from wells located adjacent to the reactor's spent fuel pool. The reactor remained shutdown for almost three years for safety and environmental reviews. In November 1999 the United States Department of Energy decided to permanently shutdown the HFBR. The decontamination and decommissioning of the HFBR complex, consisting of multiple structures and systems to operate and maintain the reactor, were complete in 2009 after removing and shipping off all the control rod blades. The emptied and cleaned HFBR dome which still contains the irradiated reactor vessel is presently under 24/7 surveillance for safety. Details of the HFBR cleanup conducted during 1999-2009 will be described in the paper.

KEYWORD: decommissioning, HFBR, spent fuel, control rod, beam plug

1. Introduction

Built in 1965 and continuously operated up to 1996, the High Flux Beam Reactor (HFBR) at Brookhaven National Laboratory (BNL) was one of the earliest experimental facilities in the United States [1], designed for the neutron scattering and activation research and achieved an operational history of about $3x10^5$ mega-watt-days by the time of its final shutdown. The HFBR was a heavy water (D_2O) cooled and moderated reactor, with 28 highly-enriched uranium fuel elements (93% ^{235}U-enrichment) in the core center and 16 control rods made of europium-oxide (Eu_2O_3) and dysprosium-oxide (Dy_2O_3) in the core edge. Surrounding the core edge were the 9 horizontal and 3 vertical thermal-neutron irradiation thimbles, which complemented the 2 vertical in-core and 2 vertical core-edge fast-neutron irradiation thimbles, for experimental sampling. The neutron moderator and reflector D_2O was contained in a 5-cm thick and 7.2-meter high aluminum pressure vessel, extending from the bottom of the spherical section holding the core to the top of the cylindrical section covered by a plate.

The most recognizable features of the HFBR structure in the 53,000-m^2 wide complex are the domed reactor confinement building and the 100-meter tall red and white stack, as shown in Figure

[1] *NY-State Professional Engineer, National Synchrotron Light Source, Brookhaven Lab, NY 11973*
[2] *Health Physicist, Radiological Control Division, Brookhaven Laboratory, Upton, NY 11973*
[3] *Guest Physicist, National Nuclear Data Center, Brookhaven Laboratory, Upton, NY 11973*

1. The confinement building is a hemispherical dome, constructed from welded steel plates and supported by an I-beam framework that rests on a cylindrical base. The foundation of the building is a 1.5-meter thick reinforced concrete mat bearing on the soil beneath the structure.

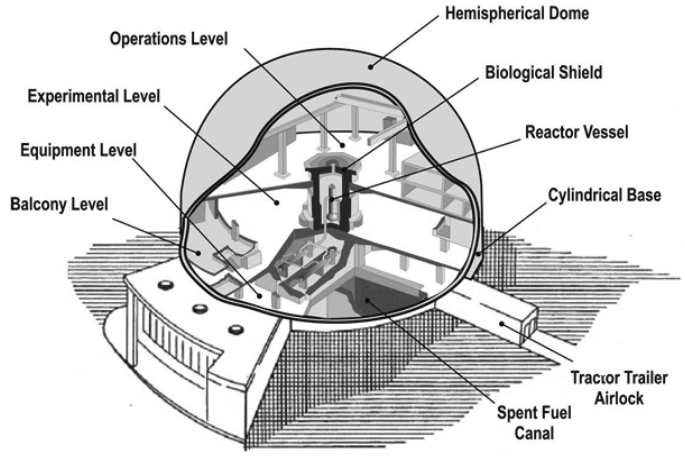

Figure 1. At left is an aerial view of the 53,000-m^2 HFBR complex, including reactor confinement building, 100-m stack and three cooling towers. At right is a cutaway of the HFBR dome containing major inside components and outside annex.

The reactor vessel and its major internal components and external shielding are detailed in Figure 2, where the vertical array of fuel elements and control rods are located at spherical center of the pressurized vessel.

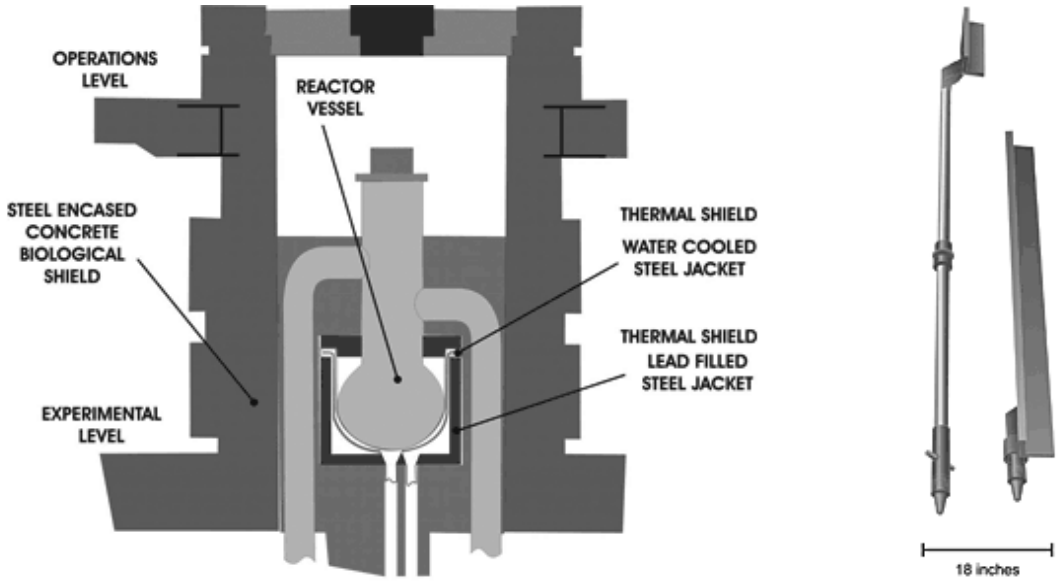

Figure 2. Sideview of HFBR showing major components (gray), shielding layers (black), control rod and blade (r).

After three decades' operation under the design power of 30-60 mega-watts, a peak of tritiated water level was detected in December 1996 shutdown of the HFBR for routine maintenance and refueling. Through repeated sampling of ground water from wells located adjacent to the reactor's in-house spent fuel pool, leaking water from the saturated wall grout at a rate of 8-11 liters each day was confirmed by the result from underground water plume modeling. Since then the reactor

had remained shutdown for almost three years during safety and environmental reviews. In November 1999, the United States Department of Energy (DOE) decided to permanently shutdown the HFBR and subsequently requested its decontamination and decommissioning. Prior to the D&D's final approval, numerous studies were performed for site re-characterization, facility dismantling, material activation and risk assessment. In 2000, the HFBR was transferred to the Environmental Restoration Projects Division for surveillance and maintenance, pending the development of a plan and schedule for decommissioning. Up to 2001, the DOE and BNL had worked with local (Suffolk County and its Brookhaven Township), state (NY), and federal (EPA, DOT) regulatory agencies to detail the tasks of site cleanup. In 2002, a Feasibility Study and Proposed Remedial Action Plan that outlined final decontamination and decommissioning steps for the HFBR were prepared. Listed below is a brief timeline of major activities performed at HFBR complex between 1996 and 2009.

- The planning for shipping spent fuel commenced in 1994. The shipments took place from November 1996 until September 1997.
- The floor of the spent fuel pool (SFP) was decontaminated in the autumn of 1998.
- The SFP was drained and a stainless steel liner fabricated during 1999. Cleaning of the Equipment Level (which included the SFP) was done in the fall of 1999.
- The cooling tower superstructure was dismantled and disposed of as waste in 1999.
- Components internal to the reactor vessel were surveyed in March 2000.
- Shielding blocks and chemicals were removed and are being reused (2000-2005).
- The reactor vessel was drained of D_2O then backfilled with H_2O in the late spring and summer of 2000. Heavy water was shipped to Chalk River Laboratories in 2001-2002.
- Surveys of the remaining beam plugs took place in 2001.
- Scientific equipment was removed and is being reused or has been sent to an offsite disposal facility in 2003.
- The confinement structure and spent fuel pool were modified in 2004 to meet the requirement of Article 12 of the Suffolk County Sanitary Code [2].
- Post shipment tritium-surveys, with building ventilation turned-off, were made in 2005.
- The Cold Neutron Facility (beamline H-9) and annex were decontaminated and cleaned for reuse in 2006.
- Several aged beam plugs that had been kept in storage were shipped to Barnwell SC in 1992-2004, before the permanent shutdown of HFBR, to make room for newly removed beam plugs in that storage facility. After the permanent shutdown, those remaining beam plugs were removed and shipped out in 2003-2004.
- The cooling tower basin, guard house, pump-switchgear house, water treatment and stack monitoring facilities were dismantled and removed before the end of 2006.
- The control rod blades were shipped out in 2009, after a long decay period since 1996.
- Peripheral activities were ongoing including the survey of 100-m stack exterior in June 1999.

2. Spent Fuel Shipment

There were more than one thousand fuel elements in the light-water filled spent fuel pool on the HFBR's equipment level. All the elements cladded with aluminum-1100 were 93%-enriched to the ^{235}U when freshly made. After the permanent shutdown of HFBR, they were individually lifted from the spent fuel pool in 1997 and collectively transported to the Savannah River repository in South Carolina, to be reprocessed for uranium extraction.

Loading of the spent fuel into shipping casks is a two part process. In the first part, spent fuel is removed from the SFP and placed in a DOT-approved transfer cask, then transported through an

airlock to the outside loading assembly. This operation took place on the Equipment level of the HFBR. This operation was performed inside the building, and all building air is vented through a series of High Efficiency Particulate Air (HEPA) filters. A competing set of regulations governed the loading of fuel elements at BNL (Title 10 of the Code of Federal Regulations, Part 835, [10CFR835]) covering operations at DOE sites such as BNL and the actual shipment off the government properties (Title 49 Code of federal Regulations [49CFR], DOT).

Issues included contamination, dose to personnel while loading and transporting the cask, and dose during transport. Contamination issues included loose, dispersible, and airborne. Periodic high volume air samples were collected in the area of highest probable work activity. After allowing for the decay of naturally occurring radon daughter products from the filters, all samples were analyzed at less than one tenth of the derived air concentration (DAC) for all radionuclides (at background levels, in actuality). One DAC is that airborne radionuclide activity concentration, which when breathed continuously by a standard man in one occupational year (2,000 hours), will result in a dose to that individual person of 50 mSv (5 rem). Personal anti-contamination clothing (coveralls, shoe covers), entry/exit restrictions and continuous surveys would minimize the spread of loose contamination. Wide area surveys were analyzed those at <1,000 disintegrations per minute (dpm) per 100 cm^2 surface area.

To prevent contamination being spread by weather conditions (e.g. raining days), outdoor operations were suspended. At other times, a Herculite shroud covered the shipping cask during transfer from the transfer cask.

Personnel dose ranged from 2.63 mSv (collective) for the first spent fuel shipment to 12.64 mSv for the last shipment. For the spent-fuel shipment project, there is a correlation between personnel dose versus spent-fuel decay heat. Decay heat ranged from approximately 500 watts for the first shipment to ~4,200 watts for the last shipment. Due to political considerations, the shipment route was not direct. Initially, the casks were trucked at night from BNL to a barge loading dock at about 24 km away. The barge travelled from Long Island of NY to Portsmouth of VA, where the casks were off-loaded and trucked to the DOE Savannah River Site for fuel reprocessing. Both dose-rate and contamination surveys were performed at each segment. All were within the regulatory limits at <0.05 mSv/h at 30-cm from the cask, and <1,000 dpm per 100 cm^2 area on the cask surface.

3. Spent Fuel Pool Decontamination

The next step involved draining the SFP, decontaminating the walls and floor of the pool to the extent possible, and constructing a stainless liner over the interior surfaces [3], as shown in Figure 3. The SFP was used to receive reactor vessel components for loading into shielded shipping casks. After draining the SFP, insertion of a steel pool liner was planned and carried out. The water was decontaminated by passing it through ion exchange resin and then disposed of.

Figure 3. HFBR spent fuel pool with all water drained (l), heavy water shipping (m), and steel liner construction (r).

Initial radiological surveys of the SFP floor indicated the general area dose rate at ~30.5 cm from the floor is 0.1-0.2 mSv/h, with contact dose rates at "hot spots" in the 1 mSv/h range, leading to an expected dose of 0.8-1.6 mSv for a person working in this area for one 8-hour shift. In order to reduce this possible dose, using a strippable coating to remove contamination (which would tend to also reduce dose) from the surface layer was employed. Stripcoat TLC™ Free, provided by the Bartlett Nuclear Services, was tested as a dose-reducing agent. After applying the stripping agent, allowing it to dry, then peeling it away, the general area dose rate was reduced to 0.03-0.05 mSv/h. The steel liner was then constructed. For receiving reactor vessel components, the lined SFP was re-filled with light water.

More than 41,000 liters of tritiated heavy water coolant and moderator in the HFBR has been removed from the spherical pressure vessel and initially replaced with light water.

4. Draining Operation

The construction of the reactor vessel was such that the lowest connection to the vessel was at a level of 3 meters. Therefore, the volume of water below this point could not be drained or pumped using existing systems. An additional complicating factor was that certain areas would be inaccessible due to high radiation levels, when the water level was lowered. A temporary pumping system was developed which utilized, to the extent possible, existing piping contained within the biological shield. An in-line peristaltic pump was positioned outside the biological shield, along with associated tubing and flex-hose, which ultimately connected to the normal (shielded) drain system. Portable real-time tritium monitors were also placed next to the hose connections to monitor potential system leaks. Spill response material was also pre-staged. Difficulties experienced during the draining operations included a low flow rate and frequent tubing changes, which lengthened the drain time from a predicted eight hours to several days. During early tubing change operations there was some spillage, which was eventually contained. Once pumping issues were resolved by slightly pressurizing the vessel and the pumping system to 34.5 kPa gauge pressure (5 psig), the remaining water was drained without incident.

Throughout the draining, dose rates along the drain line remained at background levels indicating no activated particles carried through. Periodic dose rate checks along the bioshield face were also found unchanged from the baseline, indicating no "shine" through a weak point in the shield. When the final survey was completed, the vessel was refilled with light water up to a height of 2.92 meters. The light water which served as a neutron shield would allow personnel access to areas containing equipment. The collective external dose was less than the minimum reportable dose for the thermoluminescent (TLD) dose monitors.

5. Tritium Exposure and Contamination

From the standpoint of possible contamination, tritium was the isotope of concern. As a heavy-water moderated reactor, the chief byproduct is tritium. The tritium content of the primary water had last been sampled in early 1997, immediately after the HFBR was in shutdown mode. This halted any further tritium production. At that time, the tritium concentration was 5.55×10^7 Bq/cm^3, which had by 2000, when the draining operation was to take place, decayed to 4.63×10^7 Bq/cm^3. The annual limit on intake (ALI) for tritium is 2.96×10^9 Bq, which if taken into the body, results in a committed equivalent dose (CED) of 50 mSv. The reactor vessel (full) holds ~56,700 liters of water. A concentration of 4.63×10^7 Bq/cm^3 could have resulted in severe dose consequences from any spill. Tritium dose is calculated based on half of the tritium inhaled and half taken in by ingestion/Trans-dermal absorption. Portable real-time tritium air monitors were placed in the area

adjacent to the station controlling the peristaltic pumps, the pump area and the return connection to the hard piped system. The alarm hold point was set at 1 DAC (a concentration of 7.4×10^5 Bq/m^3). The peristaltic pumps were placed in secondary containment. An original pumping rate estimate of 30 liters per minute was high, as the measured value was less than 4 liters per minute. A second pump was installed in series. Tritium airborne concentration remained $<1.85 \times 10^5$ Bq/m^3 (the practical lower detection limit of the monitor is $7.4\text{-}18.5 \times 10^4$ Bq/cm^3). As the pumping time lengthened, (after ~12 hours) the tubing ruptured and the pump was immediately shutoff. The activity concentration, as measured by the tritium air monitors, spiked to 3.7×10^7 Bq/cm^3. Local exhaust hoses (connected to the HFBR off-gas system) were used to increase airflow in the immediate area. The liquid, which had spilled into the secondary containment, was absorbed and the absorbent material disposed. Within 20 minutes, the tritium airborne concentration in the immediate area had dropped to $<3.7 \times 10^6$ Bq/m^3. At this point the tubing was periodically changed to prevent rupture. When pumping issues were resolved, there were no further increases in airborne tritium concentration.

Analysis of bioassay samples indicated that the maximally exposed individual received an internal dose of ~3 mSv (CED). This person was involved in a second (connector failure) spill. The collective dose, as estimated from tritium bioassay analyses, was less than 1 mSv.

In 2001-2002, the heavy water was transported to the Chalk River National Laboratories in Ontario, Canada.

6. Reactor Vessel Internal Components

Measurements inside the reactor vessel, which was backfilled with H_2O (up to 90% height) after the removal of fuel elements (1997) and the drainage of D_2O (2000) from it, were made to identify radiation levels, from which activity levels (on which to base disposal) were estimated. One such set of measurements were made using the vertical irradiation thimbles. High dose films measured the gamma-ray dose at various depths. Listed in Table 1 are the data collected during 2000-2002, after the spent fuel removal (1997) and HFBR permanent shutdown (1999).

Table 1. Gamma-ray dose rate measured by the Red Perspex high-range film in 2 core-edge vertical thimbles (fast neutron region) and 1 out-core vertical thimble (thermal neutron region).
(1 Sv = 100 R)

Vertical Tube (out-core)	Height from the Tube Tip (cm)	Reference Level of Measurement (to rod blade & transition plate)	Gamma Dose Rate (Sv/h)
V-13	10.2	Level with control rod blades	28.25
V-14	10.2	Level with control rod blades	101.6 (2000) vs. 68.0 (2009)
V-13	83.8	Level with lateral edge of TR plate	59.25
V-14	83.8	Level with lateral edge of TR plate	114.8 (2000) vs. 82.5 (2009)
V-13	91.4	7.6 cm above the edge of TR Plate	88.0
V-10	17.8	Below the control rod blade	16.3

It is observed that dose rates measured by the Red Perspex high-range methyl-methacrylate films inserted at an equal distance into V-13 and V-14 were not the same. Each of the films was inserted at the plane of the transition plate. The V-13 and V-14 tubes were equal-distant from the reactor core (V-13 at 139° and V-14 at 319° azimuthally). The dose rate in the V-13 tube was 59.25 Sv/h and that in V-14 (same plane, opposite side of the core) was 114.8 Sv/h. One cause could be that the control rod blades on the side of V-13 had been replaced at a later date than those

on the V-14 side. During the HFBR's lifetime, all control rod blades had been replaced, but at different times. Those on the V-13 side, therefore, had less time in the core edge to be activated. The neutron flux and the fast flux to thermal flux ratios also varied during the operational lifetime of the HFBR, depending upon the age of the fuel in the rods adjacent to the measurement points. The dose rate at the plane of the control rod drive blades also indicates variability. The dose rate in V-13 at the plane of the control rod drive blades was 28.25 Sv/h, while the dose rate measured in V-14 at the same depth was ~4 times higher, 101.6 Sv/h.

Measurements were checked by using an ion chamber at several depths in the V-10. At a depth ~30.5 cm above the film measurement spot, the "peanut" ion chamber measured the dose rate as 16.3 Sv/h [4]. In 2000 (measured, as noted above, by high-dose Red Perspex films) and in 2009 (measured by an Eberline RO20 multi-range air-filled ion chamber), dose and dose rate measurements were specifically conducted for the V-13 and V-14 thimbles at level of control rod blade and of transition plate (Figures 2 and 4), since they were identified as the "hottest" components in the core-edge and core-top areas, respectively. The measured maximum gamma-ray dose rate in the V-14 thimble at level of control rod blade was 101.6 Sv/h in 2000 and decayed to a measured 68 Sv/h in 2009. Using the same instrument for measurement in the V-14 at level of transition plate, the maximum gamma-ray dose rate was 114.8 Sv/h in 2000 and 82.5 Sv/h in 2009.

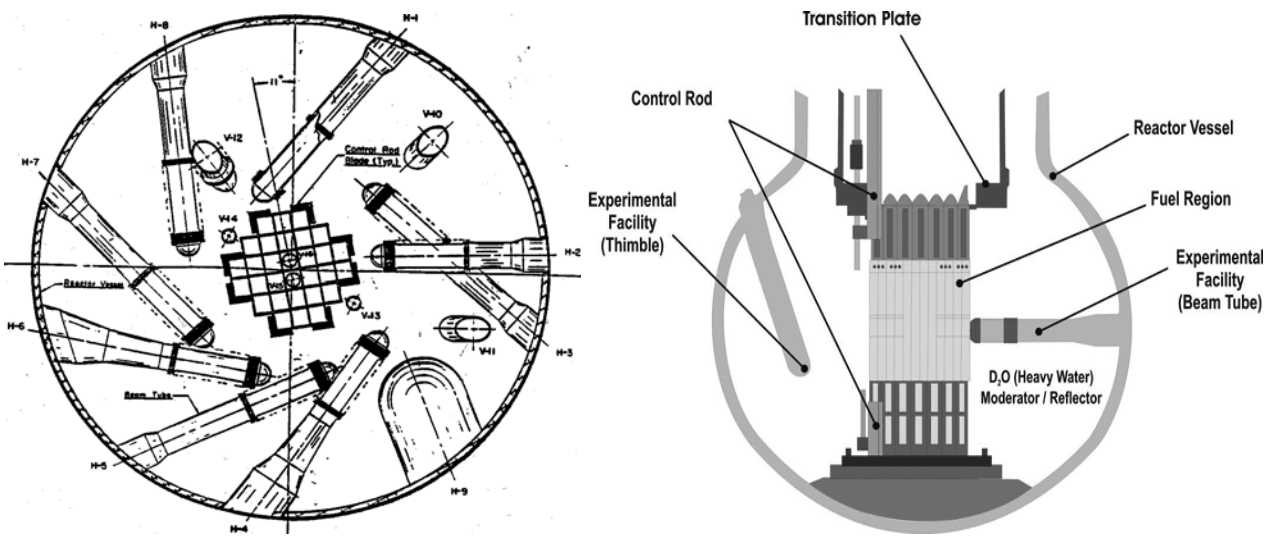

Figure 4. HFBR horizontal and vertical midplanes showing 28 fuel elements, 16 control rod blades and 9 beam plugs.

In 2000, dose rate measured with an Eberline RO7 water-resistant high-range air-filled ion chamber was also conducted for data verification. At location of 7.6 cm above the edge of Transition Plate, the measured dose rate was 120 Sv/h, this was ~5% larger than the film measurement of 114.8 Sv/h. At 7.6 cm above the center of Transition Plate, the dose rate was measured at 160 Sv/h, which was too "hot" for the high-dose film in use for measurement.

Calculations were performed to compare with the dose rate measurement, by assuming a ^{60}Co content of 9.4 x10^{13} Bq. A good agreement at ±7% was found with all the data of V-14 in Table 1.

The 16 control rod blades at the core-edge area included 8 top-down main blades and 8 bottom-up auxiliary blades. While each of the main blades consisted of stainless-steel (SS) and neutron-poison europium-oxide in the first 30.5 cm tip-section followed by the SS and neutron-poison dysprosium-oxide in the next 64.8 cm section, each of the auxiliary blades consisted of SS and europium-oxide only in the 30.5 cm tip-section. These 16 blades in total contained ~8.14x10^{14} Bq of radioactive materials. In 2009, ~10 years after the start of decommissioning, these decayed control rod blades were mechanically disassembled, lifted then dropped into the spent fuel chute to

slide down to the spent fuel pool (Figure 5), where they were allowed to further cool-down in preparation to be packed into DOT-licensed shipping casks and sent to the DOE's Nevada Test Site for disposal as radioactive waste.

Dose rate measurements using an Eberline RO20 multi-range air-filled ion chamber were conducted at each of the unshielded Control Rod blades, prior to packing into the casks. At a distance of 30.5-cm through air, the average dose rate of the main rods was 42 Sv/h (maximum of 48 Sv/h and minimum of 31.5 Sv/h) and of the auxiliary rods was 18 Sv/h (maximum of 67.7 Sv/h, and minimum of 8.2 Sv/h).

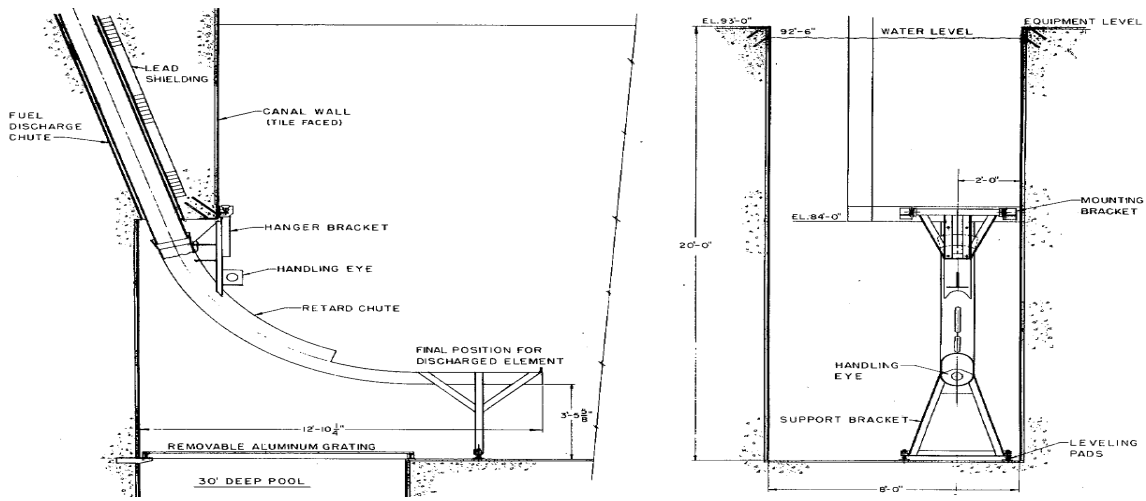

Figure 5. The fuel discharge chute from vessel top to the storage rack in water at spent fuel pool.

7. Beam Lines

There were 9 cylindrical steel horizontal beam plugs of varying sizes that were inserted in the beam ports on the experimental level around the reactor to enable researchers to irradiate samples, as shown in Figures 4 and 6. The beam plugs contained a total of ~1.85×10^{13} Bq of radioactive materials. The predominant radionuclide found in the control rod blades and the beam plugs was ^{60}Co. One such component segment was the H-6 beamline flange. A small section was analyzed by gamma spectroscopy as 1,850 Bq ^{60}Co. These beam plugs have been removed from the HFBR and shipped offsite of the BNL [5], as shown in Figure 7. During 2003-2004, ~6 years prior to the control rod blades' shipout, all the beam plugs were transported from BNL to the DOE Nevada Test Site for disposal as radioactive waste.

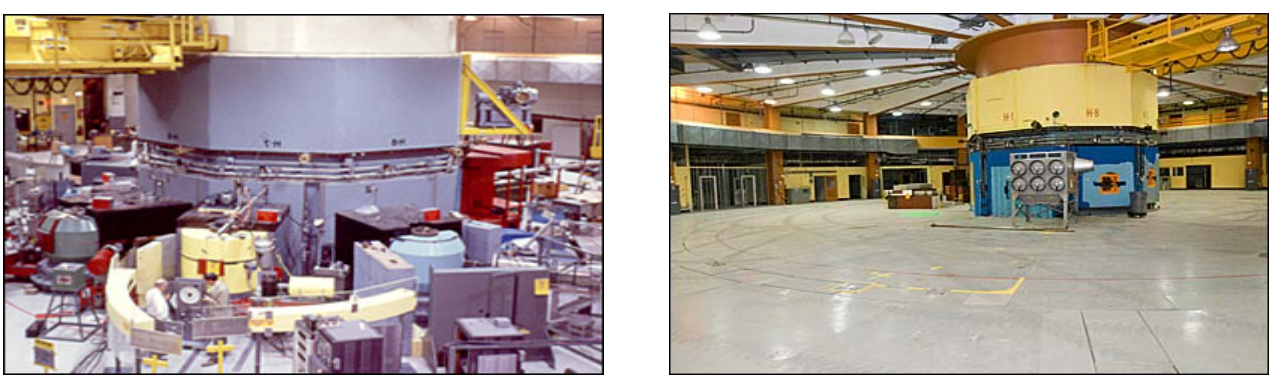

Figure 6. The HFBR experimental floor before (l) and after (r) the dismantling, cleaning and repainting of 9 beamlines.

Figure 7. The type-A cask (l) and type-B cask (m) were used for beam plug shipout from HFBR experimental floor (r).

As shown in Table 2, dose rate measurements at 2 beam plugs using an Eberline RO2 low-range air-filled ion chamber were performed with the shutter closed, the fuel and D_2O removed (backfilled with H_2O) and the control rod blades up. During 2001-2002, the obtained dose rate at the H-1 beamline was 0.01 Sv/h at the plug face and 0.02 Sv/h at 30.5-cm inside the beam plug. At the H-2 beamline, the dose rate was 6 mSv/h at the plug face and 0.36 mSv/h at 20-cm inside the beam plug. In 2008, prior to the shipping of the beam plugs to the disposal facility, dose rate measurements using an Eberline RO20 multi-range air-filled ion chamber were performed. At 45.7-cm away from the beam plug H-1, the reading was 23 mSv/h (this calculated to 7.44×10^{10} Bq of ^{60}Co-equivalent), and at 45.7-cm from H-2, the reading was 47 mSv/h (this calculated to 1.51×10^{11} Bq of ^{60}Co-equivalent).

Table 2. Gamma-ray dose rate measured at tip of 2 fast neutron beam plugs when fuel elements and D_2O are removed. (1 Sv = 100 R)

Horizontal Beamlines	**Neutron Beam for Use (plug tip to core center, tip to core midplane)**	**Ion Chambers (RO2, RO20)**	**Gamma Dose Rate (Sv/h) (plug face and inside (2001 2002) , in-air at 45.7-cm away (2008))**
H-1	fast neutron beam (33.0 cm to core center, 15 cm below midplane)	RO2 (2001-2002)	.01 Sv/h (face), .02 Sv/h (30.5cm in plug)
		RO2 (2008)	23 mSv/h (45.7 cm away, in air)
H-2	fast chopper beam (32.8 cm to core center, 15 cm above midplane)	RO2 (2001-2002)	6 mSv/h (face), .36 mSv/h(20 cm in plug)
		RO20 (2008)	47 mSv/h (45.7 cm away, in air)

8. Peripheral Activities

In parallel with planned activities conducted at the reactor dome, many tasks were simultaneously performed at other locations within the 53,000-m^2 complex. One such task was surveying the 100-meter high exhaust stack before it would be taken down. Work on the exhaust stack exterior entailed removal of “old” paint as waste. Sampling for lead content was performed,

and the collected paint chips were analyzed as containing lead. Personnel collected paint chips and collected wipes of the upper sections. These were all surveyed at <1,000 dpm per 100 cm^2 (threshold for a DOE- defined Contamination Area, that requires entry and exit controls). The paint chips from the upper areas (generally 1.8 meters above the 3rd level catwalk around the stack) were analyzed at <37 Bq per sample ^{137}Cs, with a sample generally a few grams). This is less than the defined value for radioactive material of 74 Bq/gm used by the DOT.

9. Post D_2O Tritium Survey

When heavy water was drained (in 2000) and removed (2001-2002), the reactor vessel was refilled with light water. Building ventilation was shut down and tritium samples collected to ascertain ambient tritium levels with no active ventilation. Open-top containers filled with light water were allowed to equilibrate with ambient atmosphere over a 1-week period. The water samples were analyzed via liquid scintillation. After 1-day, tritium activity concentration was 0.06 Bq/cm^3 on the Experimental Level and 0.15 Bq/cm^3 on both the Operations and Equipment Levels. Residual tritium activity concentration after 1-week was 20.9 Bq/cm^3 on the Experimental Level, 12.54 Bq/cm^3 on the Operations Level and 85.5 Bq/cm^3 on the Equipment Level.

10. Discussion

In response of concerns on the total and percentage of radioactivity inventory of activated components at vessel internal and shields after 3 decades' continuous operation of the HFBR, evaluation was made based on measured data collected from the replacement of fuel elements, control rod blades and beam plugs during routine shutdown for maintenance (prior to the permanent shutdown of HFBR in 1999) and from the dismantled thermal-shield and bio-shield materials (after the permanent shutdown during 1999 and 2007).

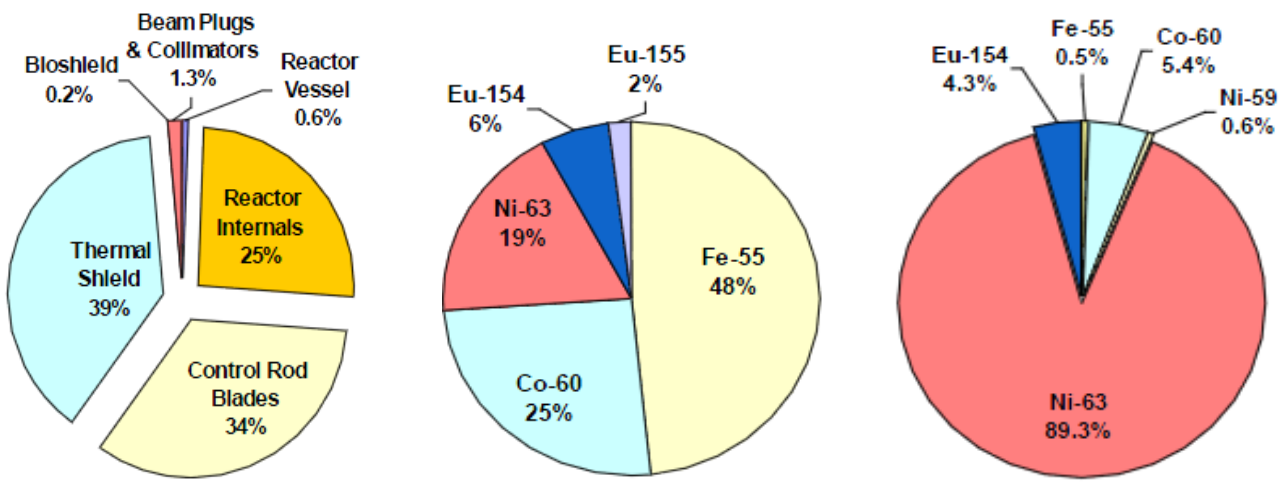

Figure 8. Percent of the total HFBR activated components in 2007 (l), percent of the total radionuclides 2.41×10^{15} Bq at HFBR in 2007 (m), and percent of the decayed radionuclides at 4.18×10^{14} Bq in 2032 (r). Note the $T_{1/2}$ of ^{63}Ni is ~100 yr.

Shown in the left of Figure 8 is the documented HFBR total inventory of activated components in 2007, in the middle is the total radioactivity of nuclides in 2007, and in the right is predicted radioactivity of decayed nuclides in 2032 (all in different repository sites). Cross comparison indicates that the eventual amount of radionuclides will be dominated by the long half-life ($T_{1/2}$)

^{63}Ni, ^{60}Co and ^{154}Eu. The physical form of these activated components (mostly metals) makes the hazard primarily a direct exposure risk and not a contamination risk. Since most of the removable parts and components from the reactor vessel (except the shielded vessel body and the shields), which had been shipped offsite and safely-stored or re-processed in government-owned or licensed facilities, are ^{55}Fe, ^{59}Ni and ^{63}Ni related that have no gamma-rays associated with them (the activity amounts to electron-capture or beta-decay reactions), there are no conceivable radiological hazards to the workers and the public. For accuracy, the decay and transformation of radionuclides were calculated in terms of the data listed in KAPL's "Nuclides and Isotopes, Chart of the Nuclides" [6]. The radiation-induced hazard, which represents the effects from limited gamma-ray exposure, was assessed by the ^{60}Co-equivalent absorbed dose.

11. Conclusion

The HFBR complex has been placed and is being maintained in a safe and stable condition under 24/7 surveillance, since its permanent shutdown by the DOE in 1999 followed by a full spectrum of decontamination and decommissioning in 1999-2009. During the past decade, major cleanup activities performed within the 53,000-m^2 reactor complex included (1) the groundwater cycling by continuous pumping fresh water into the contaminated area for a dilution and natural decay of tritiated water (which was continuous pumping out for cycling via filters) in place, (2) the dismantling and removal of contaminated structures and hazardous materials (all the spent fuel elements were shipped offsite in 1996-1997), (3) the draining and shipping out of heavy water from the spent fuel pool and built a steel liner to cover the pool's surface, (4) the disassembling and cleaning of reusable equipment and experimental apparatuses for future use, (5) the removal and shipping out all the Control Rod blades (after long-decay period since 1996) from the reactor vessel, and (6) the submission of site survey and facility close-out safety analysis report to the local, state, and government agencies.

12. Acknowledgement

This research was supported by the US-DOE under the contract DE-AC02-98CH10886.

13. References

[1] Surf website of *http://www.bnl.gov/hfbr/hfbr_complex.asp*
[2] Article 12 regulates toxic and hazardous materials storage and handling.
[3] Surf website of *http://www.bnl.gov/hfbr/interim_cleanup.asp*
[4] N Holden, R Reciniello, J Hu, D Rorer, *Radiation Dosimetry of Pressure Vessel Internals of the High Flux Beam Reactor*, 11th International Symposium on Reactor Dosimetry Proceedings, pp. 76-83 (2002)
[5] Surf website of *http://www.bnl.gov/hfbr/transportation.asp*
[6] E Baum, H Knox, T Miller, *Chart of the Nuclides*, 16th ed, Knolls Atomic Power Lab (2002)